PA-32

CHEROKEE

PARTS CATALOG

PA-32-260

PA-32-300

PA-32R-300

PIPER AIRCRAFT CORPORATION

(PART NUMBER 753 689)

REVISIONS STATUS

The information compiled in this Parts Catalog will be kept current by revisions distributed periodically.

Current revisions to this PA-32 and PA-32R Parts Catalog issued June 27, 1975, are as follows:

753 689 (PR751031).....Dated October 1975
753 689 (PR760412).....Dated April 1976
753 689 (PR760917).....Dated September 1976
753 689 (PR770223).....Dated February 1977
753 689 (PR770909).....Dated September 1977
753 689 (PR780113).....Dated January 1978
753 689 (PR781106).....Dated November 1978
753 689 (PR800414).....Dated April 1980
753 689 (PR071210).....Dated December 2007
753 689 (PR080910).....Dated September 2008
753 689 (PR081210).....Dated December 2008
753 689 (PR061009).....Dated June 10, 2009

*Piper has ceased production of all Aerofiche (ie. microfiche) products.

Parts Catalog subscriptions are available exclusively from Avantext Inc. (www.Avantext.com) on CD-ROM or DVD. The CDs/DVDs include applicable Service Bulletins and Service Letters.

INTRODUCTION

This illustrated Parts Catalog provides simple, positive identification of replacement parts for Model PA-46R-350T Malibu Matrix G1000 (serial numbers 4692xxx and up) manufactured by Piper Aircraft, Inc. of Vero Beach, Florida.

WARNING

USE ONLY GENUINE PIPER AIRCRAFT PARTS OR PIPER AIRCRAFT APPROVED PARTS OBTAINED FROM PIPER APPROVED SOURCES, IN CONNECTION WITH THE MAINTENANCE AND REPAIR OF PIPER AIRPLANES

CAUTION

DO NOT USE THIS CATALOG FOR RIGGING AND INSTALLATION PURPOSES.

NOTE

PIPER AIRCRAFT CORPORATION EXPRESSLY RESERVES THE RIGHT TO SUPERSEDE, CANCEL AND/OR DECLARE OBSOLETE ANY PART, PART NUMBERS, KITS OR PUBLICATION THAT MAY BE REFERENCED IN THIS MANUAL WITHOUT PRIOR NOTICE.

1. The catalog is divided into fifteen major sections as follows:
   a. Section 1 to 13 inclusive contains all replacement parts for the complete airplane. Each section is subdivided and each division includes an illustration and a parts listing.
   b. Section 14 is the Miscellaneous Group. This group includes an illustration and parts list for the Placards and Exterior Stencils and a listing of the Optional Equipment Kits, Repair Kits and Special Tools, and a listing of Miscellaneous Hardware and Consumables.
   c. Section 15 is the Numerical Index.

2. The following is a brief explanation of the columns in the parts lists: (Refer to EXAMPLE below).
   a. The FIGURE AND ITEM NUMBER column indicates the illustration figure number and its part index number. EXAMPLE: (2-1), the 2 is the figure number and the 1 is the index number. The figure number appears only at the top of each parts list page.
   b. The PART NUMBER column contains the identifying number of the replacement part and this number must be shown on all parts orders.
   c. The NOMENCLATURE column indicates the part name. This name must be shown on all parts orders.
   d. The UNITS PER ASSY. (Number Required) column represents the total quantity of parts used per figure when the part is not indented and the quantity of parts used per assembly when the part is indented. The symbol AR listed in this column means As Required.
   e. The EFFECT FROM TO column indicates the part application by airplane serial number.
   f. The SERIAL NUMBERS AFFECTED column indicates the part application by airplane serial number. Serial number effectivity indicated at a high level assembly will include items within the assembly unless otherwise noted.

3 The "ATTACHING PARTS" such as nuts, bolts, screws, etc. that are available as commercial hardware items, are not generally supplied by the Piper Aircraft Corporation. The catalog lists, for your convenience, those attaching parts required for main assemblies and installations. The identifying number for these parts appears after the part name.

4 All items of Optional Equipment are contained in the parts list in their proper sequence and sections. These items were not marked optional, since they are fully identified by their descriptions.

HOW TO IDENTIFY A PART IF YOU KNOW WHAT IT LOOKS LIKE AND KNOW WHERE IT IS LOCATED

1 Refer to Figure 1 to determine the section number in which the part is used.

2 Refer to the Table of Contents and locate the section. Note the figure numbers that illustrate the various subgroups of this main section.

a Select the Figure title you think might contain the part you wish to identify and proceed to the grid (page) specified.

3 NOTE: If you don't find the part on this illustration, try another figure in this group.

4 Refer to the "Figure and Index Number" in the Parts Listing for complete description of the part.

HOW TO ORDER PARTS

In ordering parts for your Piper Airplanes, observe the following instructions which will aid in your getting the right parts required without delay.

a Place your order with the distributor or dealer for your territory. Since parts are available only through our distributor organization.

b Always specify the model and serial number of your airplane.

c Always specify Part Number, Name, Type and Quantity Required.

d Specify the method of shipment. Freight, express, parcel post, air express, air freight or air parcel post. Where the nature of the shipment requires it or when no instructions are given, we reserve the right to ship the most suitable way.

GENERAL INFORMATION

a Shortages

All orders are checked and rechecked before leaving our Shipping Department. A packing slip is enclosed with the shipment and claims for errors or shortages must be made within three (3) days after receipt of orders.

b Returned Goods

No material should be returned to us without first securing our written permission. Material sent in without notices will be held at the owner's risk for thirty (30) days and will then be disposed of as we see fit.

Transportation charges must be PREPAID on returned goods or the shipment will be refused.

a Transportation Liabilities

The Piper Aircraft Corporation cannot be held liable for damages to parts in transit from the factory. If a shipment is received in a damaged condition, have the delivery man or Transportation Company make a notation of the damage and file your claim with the Carrier. In case of concealed damage, do not attempt to remove the part from the shipping container, or endeavor to repair the damage, but call the Carrier and have his Claim Agent inspect the damage before filing your claim with the Carrier.

PA-32 AND PA-32R SERIAL NUMBER INFORMATION

The following information should be kept in mind when ordering from this manual:

a. The serial numbers of the aircraft covered by this Parts Manual are as follows:

(1) Serial numbers of the 1966, 1967 and 1968 PA32-260 Cherokee Six Models are 32-1 to 32-1110 inclusive.
(2) Serial numbers of the 1969 PA-32-260 Cherokee Six “B” Models are 32-1111 to 32-1250 inclusive.
(3) Serial numbers of the 1970 PA-32-260 Cherokee Six “C” Models are 32-1251 to 32-1320 inclusive.
(4) Serial numbers of the 1971 PA-32-260 Cherokee Six “D” Models are 32-7100001 to 32-7100038 inclusive.
(5) Serial numbers of the 1972 PA-32-260 Cherokee Six “E” Models are 32-7200001 to 32-7200055 inclusive.
(6) Serial numbers of the 1973 PA-32-260 Cherokee Six Models are 32-7300001 to 32-7300076 inclusive.
(7) Serial numbers of the 1974 PA-32-260 Cherokee Six Models are 32-7400001 to 32-7400061 inclusive.
(8) Serial numbers of the 1975 PA-32-260 Cherokee Six Models are 32-7500001 to 32-7500053 inclusive.
(9) Serial numbers of the 1976 PA-32-260 Cherokee Six Models are 32-7600001 to 32-7600033 inclusive.
(10) Serial numbers of the 1977 PA-32-260 Cherokee Six Models are 32-7700001 to 32-7700023 inclusive.
(11) Serial numbers of the 1978 PA-32-260 Cherokee Six Models are 32-7800001 to 32-7800008 inclusive.
(12) Serial numbers of the 1967 and 1968 PA-32-300 Cherokee Six Models are 32-40000 to 32-40565 inclusive.
(13) Serial numbers of the 1969 PA-32-300 Cherokee Six “B” Models are 32-40566 to 32-40850 inclusive.
(14) Serial numbers of the 1970 PA-32-300 Cherokee Six “C” Models are 32-40851 to 32-41018 inclusive.
(15) Serial numbers of the 1971 PA-32-300 Cherokee Six “D” Models are 32-7140001 to 32-714086 inclusive.
(16) Serial numbers of the 1972 PA-32-300 Cherokee Six “E” Models are 32-7240001 to 32-7240147 inclusive.
(17) Serial numbers of the 1973 PA-32-300 Cherokee Six Models are 32-7340001 to 32-7340201 inclusive.
(18) Serial numbers of the 1974 PA-32-300 Cherokee Six Models are 32-7440001 to 32-7440172 inclusive.
(19) Serial numbers of the 1975 PA-32-300 Cherokee Six Models are 32-7540001 to 32-7540188 inclusive.
(20) Serial numbers of the 1976 PA-32-300 Cherokee Six Models are 32-7640001 to 32-7640130 inclusive.
(21) Serial numbers of the 1977 PA-32-300 Cherokee Six Models are 32-7740001 to 32-7740113 inclusive.
(22) Serial numbers of the 1978 PA-32-300 Cherokee Six Models are 32-7840001 to 32-7840222 inclusive.
(23) Serial numbers of the 1979 PA-32-300 Cherokee Six Models are 32-7940001 to 32-7940290 inclusive.
(24) Serial numbers of the 1976 PA-32R-300 Cherokee Lance Models are 32R-7680001 to 32R-7680538 inclusive.
(25) Serial numbers of the 1977 PA-32R-300 Cherokee Lance Models are 32R-7780001 to 32R-7780549 inclusive.
(26) Serial numbers of the 1978 PA-32R-300 Cherokee Lance Models are 32R-7880001 to 32R-7880068 inclusive.

STANDARD PAINT CHART

	MFG NO	PIPER PART NUMBER QUART	GALLON
EXTERIOR			
ACRYLIC LACQUER			
Pontiac Red	B-7943	4175 592	1175 592
Tampa Green	B5430	4175 360	1175 360
Newport Blue	B5501	4175 434	1175 434
Juneau White	B-7764-A	4175 657	1175 657
Lakeland Blue	B-5440	4175 433	1175 433
Orlando Green	B-5490	4175 361	1175 361
Mocha Tan	B5450	4175 627	1175 627
Madrid Red	B-5511	4175 593	1175 593
Dakota Black	H-8117-R	4175 373	1175 373
Lincoln Gray	B-7919	4175 362	1175 362
Nassau Turquoise	B-9914	4175 439	1175 439
Bimini Turquoise	B-9915	4175 438	1175 438
Reno Gold	B-9916	4175 345	1175 345
Ocala Orange (base coat)	P7948	4175 499	1175 499
Ocala Orange (top coat)	B5480	4175 437	1175 437
Dallas Yellow	Y-5783	4175 701	1175 701
Beaumont Blue	B-5530	4175 435	1175 435
Polar Gray	Y-6100-R	4175 341	1175 341
Monterey Maroon (base coat)	K-2789	4175 441	1175 441
Monterey Maroon (top coat)	C-2065-A	4175 500	1175 500
Bahama Blue	B-9170	4175 436	1175 436
Las Vegas Gold	G-2124-A	4175 332	1175 332
Avocado	G-2352	4175 331	1175 331
Lime Green	D-6449	4175 380	1175 380
Baja Yellow	D-6448	4175 379	1175 379
Denver Brown (base coat)	K-2790	4175 299	1175 299
Denver Brown (top coat)	B-5480	4175 409	1175 409
Matador Red	R4418	4175 389	1175 389
Royal Blue	X5700	4175 390	1175 390
Hickory Brown	Y9775	4175 392	1175 392
Indian Silver	M9514	4175 391	1175 391
Thinner	B5408-B	4179 402	1179 402

REVISED APRIL 1980

PA-32-260
PA-32-300
PA-32R-300

STANDARD PAINT CHART

	MFG NO	PIPER PART NUMBER QUART	GALLON
EXTERIOR (continued)			
POLYURETHANE ENAMEL (Dupont Imron)			
Baja Yellow	H7860U	4175 461	1175 461
Juneau White	H7849U	4175 462	1175 462
Ocala Orange	H7857UM	4175 463	1175 463
Madrid Red	H7861UM	4175 464	1175 464
Bahama Blue	H7853U	4175 465	1175 465
Avocado	H7852U	4175 466	1175 466
Las Vegas Gold	5242U	4176 121	1176 121
Dakota Black	99U	4176 467	1175 467
Denver Brown	H7859U	4176 122	1176 122
Matador Red	H7858U	4176 468	1175 468
Royal Blue	H7856U	4176 469	1176 469
Hickory Brown	H7855U	4175 470	1175 470
Silver	45431U	4176 123	1176 123
Lime Green	H7864U	4176 460	1175 460
Sage Green	K7887U	4176 132	1176 132
Firethorn	K7868UW	4176 133	1176 133
Buckskin	K7890U	4176 135	1176 135
Dark Blue	K7891U	4176 136	1176 136
Platinum Gray	N7918U	4176 126	1176 126
Sandalwood Tan	N7916U	4176 127	1176 127
Catalyst (Activator)	1925	4179 950	1179 950
Reducer	B486S	4179 145	1179 145
Retarder	0100S	4179 559	1179 559
Accelerator	189S	4179 951	
POLYURETHANE PRIMER (Dupont Imron)			
Wash Primer	B9287	4170 766	1170 766
Wash Primer Thinner	K1733	4179 462	1179 462
Acid Thinner	B9289	4179 403	1179 403

TABLE OF CONTENTS

FIGURE NUMBER	FIGURE TITLE	GRID NUMBER
1	View of Complete Airplane	1A13
	SECTION I WING GROUP	
2	Wing Installation	1A14
3	Wing Leading Edge Assembly (PA-32-260 S/N 32-1 and up, PA-32-300 S/N 32-40000 to 32-7840222 incl.)	1A20
3A	Wing Leading Edge Assembly (PA-32-300 S/N 7940001 and up, PA-32R-300 S/N 32R-7680001 and up)	1B1
4	Wing Trailing Edge Assembly (PA-32-260/300)	1B4
5	Wing Trailing Edge Assembly (PA-32R-300)	1B8
6	Flap Assembly	1B12
7	Aileron Assembly	1B15
	SECTION II FUSELAGE GROUP	
8	Complete Fuselage	1C1
9	Upper Forward Cockpit Assembly (PA-32-260/300)	1C9
10	Upper Forward Cockpit Assembly (PA-32R-300)	1C14
11	Upper Center Cockpit Assembly	1C18
12	Upper Aft Cockpit Assembly	1D1
13	Lower Forward Cockpit Assembly	1D5
14	Lower Aft Cockpit Assembly	1D10
15	Fuselage Aft Section	1D14
16	Enclosure Installation (PA-32-260 S/N 32-1 to 32-7200055 incl., PA-32-300 S/N 32-40000 to 32-7240147 incl.)	1D18
17	Enclosure Installation (PA-32-260 S/N 32-7300001 to 32-7300076 incl., PA-32-300 S/N 32-7340001 to 32-7340201 incl.)	1E1
18	Enclosure Installation (PA-32-260 S/N 32-7400001 and up, PA-32-300 S/N 32-7440001 and up, PA-32R-300 S/N 32R-7680001 and up)	1E5
19	Forward Cabin Door (PA-32-260 S/N 32-1 to 32-7600001 incl., PA-32-300 S/N 32-40000 to 32-7640029 incl., PA-32R-300 S/N 32R-7680001 to 32R-7680013 incl.)	1E9
19A	Forward Cabin Door (PA-32-260 S/N 32-7600002 and up, PA-32-300 S/N 32-7640030 and up, (PA-32R-300 S/N 32R-7680014 and up)	1E15
20	Aft Cabin Door	1E19
21	Forward Baggage Door	1F1
22	Aft Cargo Door (PA-32-260 S/N 32-1 to 32-7300076 incl., PA-32-300 S/N 32-40000 to 32-7340201 incl.)	1F4
23	Aft Cargo Door (PA-32-260 S/N 32-7400001 and up, PA-32-300 S/N 32-7440001 and up, PA-32R-300 S/N 32R-7680001 and up)	1F8
24	Cockpit Finishing Installation	1G1
24A	Window Curtains Installation (PA-32-260 S/N 32-7700001 and up, PA-32-300 S/N 32-7740001 and up, PA-32R-300 S/N 32R-7780001 and up)	1G19
25	Carpet Installation	1H1
26	Headliner Installation (PA-32-260 S/N 32-1 to 32-7300076 incl., PA-32-300 S/N 32-40000 to 32-73040201 incl.)	1H14
27	Headliner and Forward Fresh Air Duct Installation (PA-32-260 S/N 32-7400001 and up, PA-32-300 S/N 32-7440001 and up, PA-32R-300 S/N 32R-7680001 and up)	1H17
28	Aft Fresh Air Duct Installation (PA-32-260 S/N 32-7400001 and up, PA-32-300 S/N 32-7440001 and up, PA-32R-300 S/N 32R-7680001 and up)	1H20

TABLE OF CONTENTS

FIGURE NUMBER	FIGURE TITLE	GRID NUMBER
	SECTION II (cont.)	
	FUSELAGE GROUP	
29	Seats Installation	1I1
30	Vertically Adjustable Front Seat Assembly (PA-260 S/N 32-1251 to 32-7400009 incl., PA-32-300 S/N 32-7440027 incl.)	1I12
31	Vertically Adjustable Front Seat Assembly (PA-32-260 S/N 32-7400010 and up, PA-32-300 S/N 32-7440028 and up, PA-32R-300 S/N 32R-7680001 and up	1I15
32	7th Seat Installation	1I20
32A	Aft Facing Seat Assembly - Center (PA-32-260 S/N 32-7700001 and up, PA-32-300 S/N 32-7740001 and up, PA-32R-300 S/N 32R-7780001 and up)	1J1
32B	Club Seating Installation (PA-32-260 S/N 32-7700001 and up, PA-32-300 S/N 32-77400001 and up, PA-32R-300 S/N 32R-7780001 and up)	1J4
33	Instrument Panel Installation (PA-32-260 S/N 32-1 to 32-1110 incl., PA-32-300 S/N 32-40000 to 32-40565 incl.)	1J7
34	Instrument Panel Installation (PA-32-260 S/N 32-1111 and up, PA-32-300 S/N 32-40566 and up, PA-32R-300 S/N 32R-7680001 and up	1J11
35	Vacuum System Installation (PA-32-260 S/N 32-1 to 32-896 incl., PA-32-300 S/N 32-40000 to 32-40000 to 32-40292 incl.)	1J20
36	Vacuum System installation (PA-32-260 S/N 32-897 and up, PA-32-300 S/N 32-40293 and up, PA-32R-300 S/N 32R-7680001 and up	1K1
37	Pitot Static System Installation	1K4
38	Cabin Heat and Defroster System (PA-32-260/300)	1K8
39	Cabin Heat and Defroster System (PA-32R-300)	1K13
40	Cabin Overhead Air Vent Installation (PA-32-260 S/N 32-1 to 32-1320 incl., PA-32-300 S/N 32-400000 to 32-41018 incl)	1K17
41	Cabin Overhead Air Vent Installation (PA-32-260 S/N 32-7100001 to 32-7300076 incl., PA-32-300 S/N 32-7140001 to 32-7340201 incl.)	1K20
42	Air Conditioning Compressor, Refrigerant Lines and Alternator Installation (PA-32-300 S/N 32-40853, 32-7240056 and up, PA-32R-300 S/N 32R-7680001 and up	1L1
43	Air Conditioning Duct and Evaporator Installation (PA-32-300 S/N 32-40853, 32-7240056 and up, PA-32R-300 S/N 32R-7680001 and up	1L5
44	Air Conditioning Condenser Installation (PA-32-300 S/N 32-40853, 32-7240056 and up, PA-32R-300 S/N 32R-7680001 and up	1L8
	SECTION III TAIL SURFACES GROUP	
45	Tail Surfaces Installation	1L12
46	Stabilator Assembly	1L16
47	Fin and Rudder Assemblies	1L19
	SECTION IV CHASSIS GROUP	
48	Nose Gear Installation (PA-32-260/300)	2A6
49	Nose Gear Strut Assembly (PA-32-260/300)	2A10
50	Nose Gear Installation (PA-32R-300)	2A14
51	Nose Gear Assembly (PA-32R-300)	2A19
52	Nose Wheel Assembly (Cleveland	2B1
52A	Nose Wheel Assembly (McCauley)	2B4
52B	Nose Wheel Assembly (McCauley)	2B7

TABLE OF CONTENTS

FIGURE NUMBER	FIGURE TITLE	GRID NUMBER
	SECTION IV (cont.) CHASSIS GROUP	
53	Main Gear Installation (PA-32-260/300)	2B10
54	Main Gear Installation (PA-32R-300)	2B14
55	Main Gear Assembly (PA-32R-300)	2B18
56	Main Wheel Assembly	2B22
57	EDO Float Installation (PA-32S-300)	2C1
58	Wheel Fairing Installation (PA-32-260 S/N 32-1 to 32-7700023 incl., PA-32-300 S/N 32-40000 to 32-7740113 incl.)	2C5
58A	Wheel Fairing Installation (PA-32-260 S/N 32-7800001 and up, PA-32-300 S/N 32-7840001 and up)	2C8
59	Strut Fairing Installation (PA-32-260/300)	2C12
60	Hard Brake Installation	2C15
61	Brake Assembly	2C19
62	Landing Gear Door Installation (PA-32R-300)	2C22
63	Toe Brake Installation	2D1
64	Toe Brake Master Cylinder Assembly	2D4
	SECTION V HYDRAULIC GROUP	
65	Hydraulic System Installation (PA-32R-300)	2D7
	SECTION VI POWER PLANT GROUP	
66	Power Plant Installation (PA-32-260)	2D11
67	Power Plant Installation (PA-32-300 S/N 32-40000 to 32-7540198 incl.)	2D15
67A	Power Plant Installation (PA-32-300 S/N 32-7640001 and up)	2D19
68	Power Plant Installation (PA-32R-300)	2E1
69	Engine Exhaust System Installation (PA-32-260)	2E5
70	Engine Exhaust System Installation (PA-32-300 S/N 32-40000 to 32-7540198 incl.)	2E8
71	Engine Exhaust System Installation (PA-32-300 S/N 32-7640001 and up, PA-32R-300 S/N 32R-7680001 and up)	2E11
72	Engine Baffle Installation (PA-32-260)	2E14
73	Engine Baffle Installation (PA-32-300/R300)	2E17
74	Engine Cowl Assembly (PA-32-260/300)	2E20
75	Engine Cowl Assembly (PA-32R-300)	2F1
76	Engine Controls Installation (PA-32-260 S/N 32-1 to 32-1110 incl.)	2F4
77	Engine Controls Installation (PA-32-260 S/N 32-1111 to 32-7200056 incl.)	2F7
78	Engine Controls Installation (PA-32-260 S/N 32-7300001 and up)	2F11
79	Engine Controls Installation (PA-32-300 S/N 32-40000 to 32-40566 incl.)	2F15
80	Engine Controls Installation (PA-32-300 S/N 32-40566 and up)	2F19
81	Engine Controls Installation (PA-32R-300)	2G1
82	Constant Speed Propeller Installation (PA-32-260 S/N 32-1 to 32-1110 incl.)	2G6
83	Constant Speed Propeller Installation (PA-32-260 S/N 32-1111 to 32-7200056 incl.)	2G9
84	Propeller Assembly	2G13

TABLE OF CONTENTS

FIGURE NUMBER	FIGURE TITLE	GRID NUMBER
	SECTION VII (cont.) FUEL SYSTEM GROUP	
85	Forward Fuel System Installation (PA-32-260)	2G17
86	Aft Fuel System Installation (PA-32-260)	2H1
87	Forward Fuel System Installation (PA-32-300/R300)	2H6
88	Aft Fuel System Installation (PA-32-300 S/N 32-40000 to 32-78400222 incl.)	2H10
89	Aft Fuel System Installation (PA-32-300 S/N 32-7940001 and up, PA-32R-300 S/N 32R-7680001 and up	2H14
90	Fuel Tank Assemblies (PA-32-260 S/N 32-1 and up, PA-32-300 S/N 32-40000 to 32-7840222 incl.)	2H18
91	Fuel Tank Assemblies (PA-32-300 S/N 32-7940001 and up, PA-32R-300 S/N 32R-7680001 and up	2H21
	SECTION VIII CONTROL SYSTEM GROUP	
92	Control System Installation	2I1
93	Flap Control Installation	2I6
94	Stabilator Trim Installation	2I10
95	Rudder Trim Mechanism Installation	2I14
96	Control Wheel Installation	2I17
97	Rudder Pedal Installation	2I22
	SECTION IX ELECTRICAL SYSTEM GROUP	
98	Electrical System Installation (PA-32-260/300)	2J1
99	Electrical System Installation (PA-32R-300)	2J5
100	Instrument Panel Electrical Installation (PA-32-260 S/N 32-1 to 32-1110 incl., PA-32-300 S/N 32-40000 to 32-40565 incl.)	2J9
101	Instrument Panel Electrical Installation (PA-32-260 S/N 32-1111 and up, PA-32-300 S/N 32-40566 and up, PA-32R-300 S/N 32R-7680001 and up)	2J12
102	Battery Box Installation	2J16
103	Alternator Installation (Chrysler)	2J19
104	External Power Supply Installation (PA-32-260/300)	2K1
105	External Power Supply Installation (PA-32R-300)	2K4
106	Strobe Lights Installation (PA-32-260/300)	2K7
107	Air Conditioning Electrical Installation (PA-32-300 S/N 32-40853, 32-740056 and up, PA-32R-300 S/N 32R-7680001 and up	2K10
108	Alternator Assembly (Prestolite) (PA-32-300 S/N 32-40853, 32-7240056 and up, PA-32R-300 S/N 32R-7680001 and up	2K13
	SECTION IX ELECTRONICS GROUP	
109	Piper PM-1 Marker Beacon Installation (PA-32-260/300)	3A4
110	Piper Automatic Locator (ELT) Installation (Garrett Mfg. Ltd.)	3A7
110A	Piper Automatic Locator (ELT) installation (Communications Components Corp.)	3A10
110B	Piper Automatic Locator (ELT) Installation (Narco Avionics)	3A13
111	Radio, Antenna System and Static Wicks Installation	3A16
112	Radio Junction Boxes	3A20

TABLE OF CONTENTS

FIGURE NUMBER	FIGURE TITLE	GRID NUMBER
	SECTION X (cont.) ELECTRONICS GROUP	
113	Electric Trim Installation	3B1
114	AutoFlite Installation (PA-32-260 S/N 32-1 to 31 -1 320 incl., PA-32-300 S/N 32-40000 to 32-4101 8 incl.)	3B4
115	AutoFlite I1 Installation (PA-32-260 S/N 32-7100001 and up, PA-32-300 S/N 32-71400001 and up, PA-32R-300 S/N 32R-7680001 and up)	3B7
116	Autocontrol II Installation (PA-32-260/300)	3B10
117	Autocontrol III and III B Installation	3B13
118	AltiMatic III Installation (PA-32-260 S/N 32-451 to 32-1 110 incl., PA-32-300 S/N 32-40000 to 32-40565 incl.)	3B16
119	Altimatic III C Installation (PA-32-260 S/N 32-7500001 and up, PA-32-300 S/N 32-7540001 to 32-7840222 incl., PA-32R-300 S/N 32R-7680001 and up)	3B20
119A	AltiMatic III C Installation (PA-32-300 S/N 32-7940001 and up)	3C1
120	Radar Altimeter Installation (PA-32-260 S/N 32-7600001 and up, PA-32-300 S/N 32-7640001 and up, PA-32R-300 S/N 32R-7680001 and up)	3C5
121	Encoder Installation (Narco - AR500 & United - 51 25-P3) (PA-32-260 S/N 32-7700001 and up, PA-32-300 S/N 32-7740001 and up, PA-32R-300 S/N 32R-7780001 and up)	3C8
122	Radar System Installation (32-300 S/N 32-7940063 and up)	3C11
	Radio Installation Drawings	3C14
	SECTION XI MISCELLANEOUS GROUP	
123	Placards and Exterior Stencils (PA-32-260 S/N 32-1 to 32-1 110 incl., PA-32-300 S/N 32-40000 to 32-40565 incl.)	3C17
124	Placards and Exterior Stencils (PA-32-260 S/N 32-1 11 1 and up, PA-32-300 S/N 32-40566 and up, PA-32R-300 S/N 32R-7680001 and up)	3D1
	Optional Equipment Kits and Repair Kits	3D8
	NUMERICAL INDEX	3D13

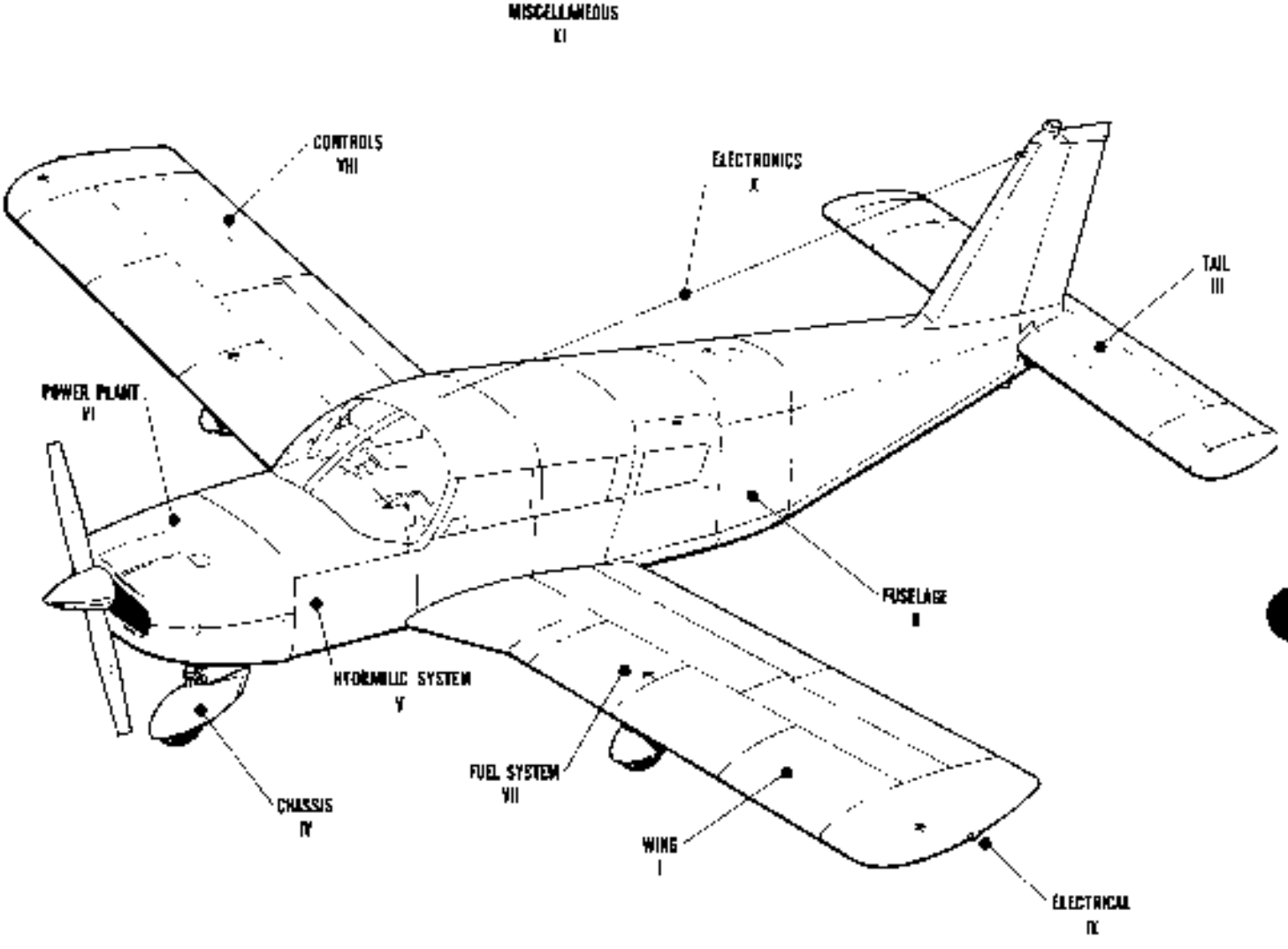

Figure 1. Complete Airplane

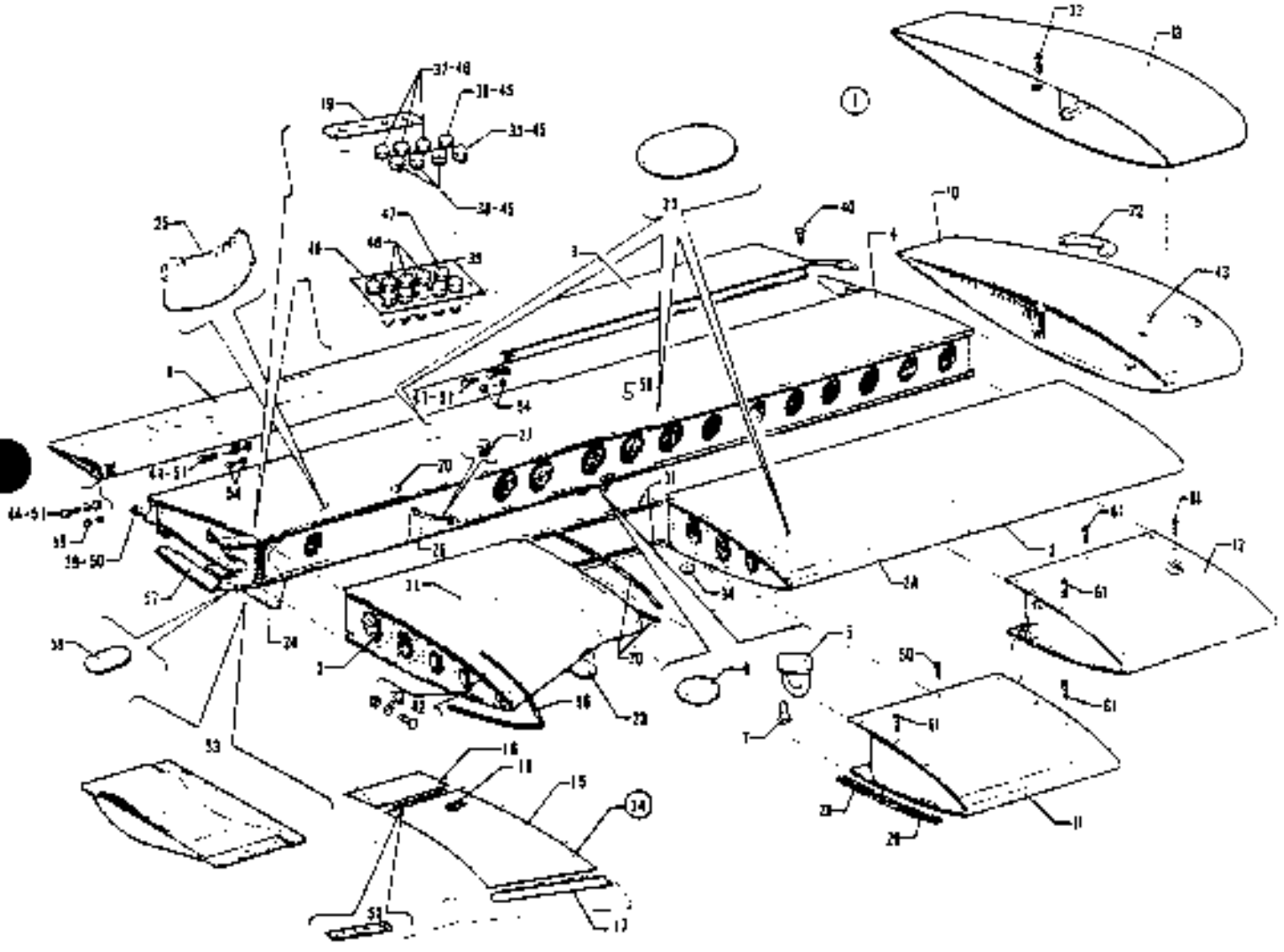

Figure 2 Wing Installation

CODE EXPLANATIONS FOR FIGURE 2

A - Used on PA-32S-300 Seaplane Model only.
B - See Figure 3 or 3A for component parts.
C - See Figure 4 for component parts.
D - See Figure 5 for component parts.
E - See Figure 6 for component parts.
F - See Figure 7 for component parts.
G - See Figure 90 for component parts.
H - See Figure 91 for component parts.
J - Used on PA-32-300 with serial numbers 32-7940001 to 32-7940253 inclusive, and PA-32R-300 with serial numbers 32R-7680001 and up.
K - Used on PA-32-300 with serial numbers 32-7940001 and up, and PA-32R-300 with serial numbers 32R-7680001 and up.
L - Used on PA-32-260 only and PA-32-300 only.
M - Used on PA-32R-300 only.
N - Used on PA-32-260 with serial numbers 32-451 and up, PA-32-300 with serial numbers 32-40000 and up, and PA-32R-300.
O - Used on PA-32-260 with serial numbers 32-451 to 32-1113 inclusive and PA-32-300 with serial numbers 32-40000 to 32-40620 incl.
P - Used on PA-32-260 with serial numbers 32-1114 and up, PA-32-300 with serial numbers 32-40621 and up, and PA-32R-300.
Q - This assembly includes brake lines, hydraulic lines, fuel lines, electrical harness, inspection cover plates, cable guard tubes, and air vent duct tubes.
R - See Figure 3A for component parts.
S - Complete kit required if replacing safety walk compound painted on wing.
T - Used on PA-32-300 only.
U - Used on PA-32-260 with serial numbers 32-1 and up, and PA-32-300 with serial numbers 32-40000 to 32-7840222 inclusive.
V - This assembly includes brake lines, fuel lines, pitot lines (in left wing only), inspection cover plates and air vent duct tubes.
X - Reference latest revision to Piper Service Bulletin 251. Randolph Sloshing compound 802 Piper p/n 757 572 is no longer recommended for aircraft application per the manufacturer and is no longer an authorized sloshing sealer in Piper fuel tanks.
Y - Reference latest revision to Piper Service Letter 745, applicable to PA-32-260 with serial numbers 32-7400001 to 32-7500023 incl. and PA-32-300 with serial numbers 32-7440001 to 32-7440101. P/N 404 890 has been replaced with P/N 404 532 (MS21042-6).

PIPER PARTS CATALOG

Figure and Index Number	Part Number	Code	NOMENCLATURE	No. Req.	SERIAL NUMBERS AFFECTED
2 -	68100	U	DRAWING - Wing Installation		
	38404	T	DRAWING - Wing Installation		32-7940001 and up
	38121	M	DRAWING - Wing Installation		
	66600	U	DRAWING - Wing Assembly (Complete)		
	69555	A	DRAWING - Wing Assembly (Complete)		32S-40000 to 32S-7240147 incl.
-1	66601-00	U	WING ASSEMBLY - Left	1	
	38404-900	T,V	WING ASSEMBLY - Left	1	32-7940001 and up
	38121-900	M,Q	WING ASSEMBLY - Left	1	
	69555-02	A	WING ASSEMBLY - Left	1	32S-40000 to 32S-7240147 incl.
	66601-01	U	WING ASSEMBLY - Right	1	
	38404-901	T,V	WING ASSEMBLY - Right	1	32-7940001 and up
	38121-901	M,Q	WING ASSEMBLY - Right	1	
	69555-03	A	WING ASSEMBLY - Right	1	32S-40000 to 32S-7240147 incl.
-2	66595-00	B,U	* LEADING EDGE ASSEMBLY - Wing inboard, left	1	
	69554-00	A,B	* LEADING EDGE ASSEMBLY - Wing inboard, left	1	32S-40000 to 32S-7240147 incl.
	38404-906	T,R	* LEADING EDGE ASSEMBLY - Wing inboard, left	1	32-7940001 and up
	38121-906	B,M	* LEADING EDGE ASSEMBLY - Wing inboard, left	1	
	66595-01	B,U	* LEADING EDGE ASSEMBLY - Wing inboard, right	1	
	38404-907	T,R	* LEADING EDGE ASSEMBLY - Wing inboard, right	1	32-7940001 and up
	69554-01	A,B	* LEADING EDGE ASSEMBLY - Wing inboard, right	1	32S-40000 to 32S-7240147 incl.
	38121-907	B,M	* LEADING EDGE ASSEMBLY - Wing inboard, right	1	
-2a	38121-910	M,R	* LEADING EDGE ASSEMBLY - Wing center, left	1	
	38404-910	R,T	* LEADING EDGE ASSEMBLY - Wing center, left	1	32-7940001 and up
	38121-911	M,R	* LEADING EDGE ASSEMBLY - Wing center, right	1	
	38404-910	R,T	* LEADING EDGE ASSEMBLY - Wing center, right	1	32-7940001 and up
-3	66770-00	B,U	* LEADING EDGE ASSEMBLY - Wing outboard, left	1	
	38404-908	R,T	* LEADING EDGE ASSEMBLY - Wing outboard, left	1	32-7940001 and up
	38121-908	B,M	* LEADING EDGE ASSEMBLY - Wing outboard, left	1	
	66770-01	B,U	* LEADING EDGE ASSEMBLY - Wing outboard, right	1	
	38404-909	R,T	* LEADING EDGE ASSEMBLY - Wing outboard, right	1	32-7940001 and up
	38121-909	B,M	* LEADING EDGE ASSEMBLY - Wing outboard, right	1	
-4	66602-00	C,U	* TRAILING EDGE ASSEMBLY - Wing aft section, left	1	
	38404-912	C,T	* TRAILING EDGE ASSEMBLY - Wing aft section, left	1	32-7940001 and up
	66602-04	A,C	* TRAILING EDGE ASSEMBLY - Wing aft section, left	1	32S-40000 to 32S-7240147 incl.
	38121-912	D,M	* TRAILING EDGE ASSEMBLY - Wing aft section, left	1	
	66602-01	C,U	* TRAILING EDGE ASSEMBLY - Wing aft section, right	1	
	38404-913	C,T	* TRAILING EDGE ASSEMBLY - Wing aft section, right	1	32-7940001 and up
	66602-05	A,C	* TRAILING EDGE ASSEMBLY - Wing aft section, right	1	32S-40000 to 32S-7240147 incl.
	38121-913	D,M	* TRAILING EDGE ASSEMBLY - Wing aft section, right	1	
-5	18457-00		* RING - Tie down	1	
-6	35725-02		* PAD - Jack	1	
-7	410 043		* SCREW - (MS24694-S56)	2	
-8	68123-00	E	FLAP ASSEMBLY - Left	1	32-1 to 32-450 inclusive
	68123-03	E	FLAP ASSEMBLY - Right	1	32-1 to 32-450 inclusive
	65591-00	E,N	FLAP ASSEMBLY - Left	1	
	65590-01	E,N	FLAP ASSEMBLY - Right	1	
-9	68105-00	F	AILERON ASSEMBLY - Left	1	32-1 to 32-450 inclusive
	68129-00	F,O	AILERON ASSEMBLY - Left	1	
	66767-00	F,P	AILERON ASSEMBLY - Left	1	
	68105-01	F	AILERON ASSEMBLY - Right	1	32-1 to 32-450 inclusive
	68129-01	F,O	AILERON ASSEMBLY - Right	1	
	66767-01	F,P	AILERON ASSEMBLY - Right	1	
-10	65815-04	G,U,X	TANK ASSEMBLY - Fuel, wing tip, left	1	
	65815-05	G,U,X	TANK ASSEMBLY - Fuel, wing tip, right	1	
-11	63998-16	G,U,X	TANK ASSEMBLY - Fuel, wing, inboard, left	1	
	95071-04	H,K,X	TANK ASSEMBLY - Fuel, wing, inboard, left	1	
	63998-17	G,U,X	TANK ASSEMBLY - Fuel, wing, inboard, right	1	
	95071-05	H,K,X	TANK ASSEMBLY - Fuel, wing, inboard, right	1	

When ordering, always specify Part Number, Description, and Serial Number of Aircraft

PIPER PARTS CATALOG

Figure and Index Number	Part Number	Code	NOMENCLATURE	No. Req.	SERIAL NUMBERS AFFECTED
2 -12	95070-04	H,K,X	TANK ASSEMBLY - Fuel, wing, outboard, left	1	
	95070-05	H,K,X	TANK ASSEMBLY - Fuel, wing, outboard, right	1	
-13	38102-00	K	TIP ASSEMBLY - Wing, left	1	
	38102-01	K	TIP ASSEMBLY - Wing, right	1	
-14	763 848	S	KIT - Pressure sensitive wing walk installation	1	
-15	79174-00		* WING WALK - Safety, wing, right, complete	1	
-16	69174-04		* WING WALK - Safety, flap	1	
-17	69736-02		* RETAINER - Wing walk	1	
-18	179 872		SAFETY WALK COMPOUND - Black (one quart can)	AR	
-19	62121-00		SHIM - Wing attachment	2	
-20	63595-00		BUTTON ASSEMBLY - Plug, gear service access (with retaining ring)	2	
-21	62109-00	U	COVER - Inspection	2	
	62109-00	K	COVER - Inspection	4	
-22	761 077	A	KIT - Assist handle replacement	2	32S-40000 to 32S-7240147 incl.
-23	38118-05	K	COVER - Inspection	2	
-24	38169-00		PLATE - Gusset	2	
-25	67164-00	M	COVER - Cylinder access, left	1	
	67164-01	M	COVER - Cylinder access, right	1	
-26	95643-06	M	BRACKET ASSEMBLY - Main gear truss, left	1	
	95643-07	M	BRACKET ASSEMBLY - Main gear truss, right	1	
-27	460 801	M	* FITTING - Lubricator, 90 degrees (MS15001-4)	1	
-28	96926-00		CHANNEL - Gang, self locking nut assembly	2	
-29	96927-00		CHANNEL - Gang, self locking nut assembly	2	
-30	406 940		CHANNEL - Gang, (PS10062-2-3) length 24.50 inches	8	
	96926-00		CHANNEL - Gang length 7.00 inches	8	
	406 942		CHANNEL - Gang (PS10062-2-7) length 17.00 inches	8	
-31	406 927		CHANNEL - Gang (PS10062-2-2) length 27.64 inches	4	
-32	402 680	K	BOLT - (NAS1104-17)	2	
	407 565	K	WASHER - (AN960-416) (under nut)	4	
	406 637	J	NUT - (MS21045-4)	2	
	404 530	T	NUT - (MS21042-4)	2	32-7940254 and up
-33	414 763	M	SCREW - (MS24693-S50)	52	
	510 058	T	SCREW - (NAS514P832-8)	52	32-7940001 and up
	494 101	K	WASHER - (PS10092-1-2C)	52	
	477 672	M	NUT - (PS10065-5-1)	52	
	477 672	T	NUT - (PS10065-5-1)	4	32-7940001 and up
	477 674	T	NUT - (PS10065-5-4)	48	32-7940001 and up
-34	463 372	A	GROMMET - (AN231-A4)	2	32S-40000 to 32S-7240147 incl.
-35	402 352	U	BOLT - (AN176-13A)	22	
	407 567	U	WASHER - (AN960-616)	32	
	96352-03	U	WASHER	26	
	404 890	U,Y	NUT - (MS20365-624C)	22	
-36	402 349	U	BOLT - (AN176-14A)	2	
	407 567	U	WASHER - (AN960-616)	6	
	404 890	U,Y	NUT - (MS20365-624C)	2	
-37	402 352	U	BOLT - (AN176-13A)	6	
	407 567	U	WASHER - (AN960-616)	18	
	404 890	U,Y	NUT - (MS20365-624C)	6	
-38	402 351	U	BOLT - (AN176-12A)	6	
	407 567	U	WASHER - (AN960-616)	12	
	96352-03	U	WASHER	6	
	404 890	U,Y	NUT - (MS20365-624C)	6	

When ordering, always specify Part Number, Description, and Serial Number of Aircraft

PIPER PARTS CATALOG

Figure and Index Number	Part Number	Code	NOMENCLATURE	No. Req.	SERIAL NUMBERS AFFECTED
2-39	401 186	U,W	BOLT - (AN5-6A)	2	
	401 187	U,W	BOLT - (AN5-7A)	2	
	402 690	A	BOLT - (NAS1106-7)	2	32S-40000 to 32S-7240147 incl
	407 566	U,W	WASHER - (AN960-516)	2	
	404 889	U,W	NUT - (MS20365-524C)	2	
	406 946	A	NUT - (NAS679-A5)	2	32S-40000 to 32S-7240147 incl
-40	416 327	K	SCREW - (AN525-10R8)	16	
	416 320	U	SCREW - (MS27039-1-10)	16	
	407 564	W	WASHER - (AN960-10)	16	
	404 887	W	NUT - (MS20365-1032C)	16	
-41	401 270	L,W	BOLT - (AN3-11A)	4	
	407 564	L,W	WASHER - (AN960-10)	4	
	404 887	L,W	NUT - (MS20365-1032C)	4	
-42	400 008	U,W	BOLT - (AN4-13A)	2	
	402 681	A	BOLT - (NAS1104-16)	2	32S 40000 to 32S-7240147 incl
	407 565	U,W	WASHER - (AN960-416) (Under nut)	2	
	407 585	U,W	WASHER - (AN960-416L) (Under nut)	2	
	406 637	U	NUT - (MS21045-4)	2	
	406 945	A	NUT - (NAS679-A4)	2	32S-40000 to 32S-7240147 incl
-43	414 467	U	SCREW - (MS24693 C51)	52	
	494 101	U,W	WASHER - (PS10092-1-2C)	52	
	477 672	U	NUT - (MU832-025/ 050-L-F10)	52	
-44	400 444	L,W	BOLT - (AN3-13A)	2	
	407 564	L,W	WASHER - (AN960-10)	2	
	404 887	L,W	NUT - (MS20365-1032C)	2	
-45	402 366	K	BOLT - (AN176-15A)	8	
	407 567	K,W	WASHER - (AN960-616)	22	
	98352-03	K	WASHER	8	
	404 532	K	NUT - (MS21042-6)	8	
-46	402 349	K	BOLT - (AN176-14A)	8	
	407 567	K,W	WASHER - (AN960-616)	22	
	404 532	K	NUT - (MS21042-6)	8	
-47	402 349	K	BOLT - (AN176-14A)	4	
	407 567	K,W	WASHER - (AN960-616)	4	
	98352-03	K	WASHER	4	
	404 532	K	NUT - (MS21042-6)	4	
-48	402 349	K	BOLT - (AN176-14A)	12	
	407 567	K,W	WASHER - (AN960-616)	24	
	98352-03	K	WASHER	12	
	404 532	K	NUT - (MS21042-6)	12	
-49	402 349	K	BOLT - (AN176-14A)	4	
	98352-03	K	WASHER	8	
	404 532	K	NUT - (MS21042-6)	4	
-50	402 816	K	BOLT - (NAS464P6LA6)	2	
	407 567	K,W	WASHER - (AN960-616)	2	
	404 532	K	NUT - (MS21042-6)	2	
-51	400 444	M,W	BOLT - (AN3-13A) Inboard	2	
	401 270	M,W	BOLT - (AN3-11A) Outboard	4	
	407 564	M,W	WASHER - (AN960-10)	6	
	404 887	M,W	NUT - (MS20365-1032C)	6	
-52	35684-02		PLACARD - Flap warning	1	
-53	63942-00		COVER - Wing bolt, left	1	
	63942-01		COVER - Wing bolt, right	1	

PIPER PARTS CATALOG

Figure and Index Number	Part Number	Code	NOMENCLATURE	No. Req.	SERIAL NUMBERS AFFECTED
2-54	63900-19		BUSHING - Flap hinge, center and outboard	6	
-55	63900-20		BUSHING - Flap hinge, inboard	4	
-56	65773-00		MOULDING - Wing root	2	
-57	67723 00		PLATE ASSEMBLY Aft wing access, left	1	
	67723-01		PLATE ASSEMBLY - Aft wing access, right	1	
-58	38582-04	T	COVER - Inspection	2	32-7940001 and up
-59	453 966		BUTTON - Plug (HS48172-P6042)	2	
-60	415 312		SCREW - (MS27039-0812)	AR	
-61	415 309		SCREW - (MS27039-0809)	AR	

When ordering, always specify Part Number, Description and Serial Number of Aircraft

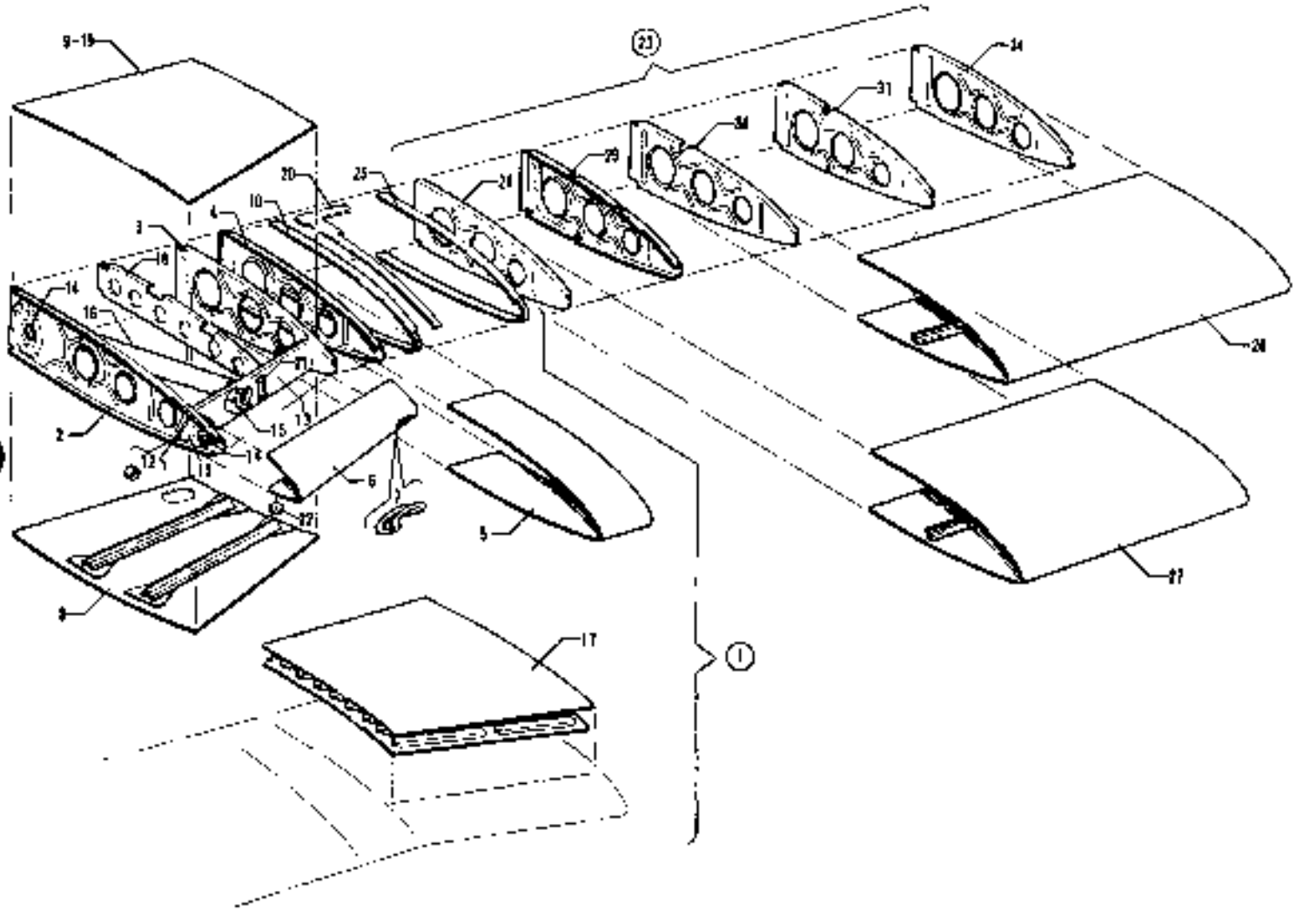

Figure 3 Wing Leading Edge Assembly
(PA-32-260 - Serial Nos. 32-1 and up)
(PA-32-300 - Serial Nos. 32-40000 to 32-7840222 incl.)

CODE EXPLANATIONS FOR FIGURE 3

A - Used on PA-32-260 with serial numbers 32-1 and up, and PA-32-300 with serial numbers 32-40000 to 32-7840222 Inclusive
B - Ascertain skin length and order accordingly
C - Used on PA-32S-300 Seaplane Model only
W - These parts must be ordered from Service Spares Department, Piper Aircraft, Lock Haven, Penna

PIPER PARTS CATALOG

Figure and Index Number	Part Number	Code	NOMENCLATURE	No. Req.	SERIAL NUMBERS AFFECTED
3-1	66696-00		LEADING EDGE ASSEMBLY - Wing inboard, left	1	
	69554-00	C	LEADING EDGE ASSEMBLY - Wing inboard, left	1	32S-40000 to 32S-7240147 incl
	66695-01		LEADING EDGE ASSEMBLY - Wing inboard, right	1	
	69554-01	C	LEADING EDGE ASSEMBLY - Wing inboard, right	1	32S-40000 to 32S-7240147 incl
-2	95639-02		RIB - Wing nose, root, left	1	
	95639-03		RIB - Wing nose, root, right	1	
-3	62021-00		RIB - Wing nose, Sta 49.25, left	1	
	62021-01		RIB - Wing nose, Sta 49.25, right	1	
-4	62022-02		RIB - Wing nose, Sta 67.00, left	1	
	62022-03		RIB - Wing nose, Sta 67.00, right	1	
-5	62084-00		SKIN - Inboard wing	1	
-6	68113-200		SKIN ASSEMBLY - Leading edge, left	1	
	68113-201		SKIN ASSEMBLY - Leading edge, right	1	
-7	68111-00		DOUBLER - Air inlet	1	
-8	62086-00		SKIN ASSEMBLY - Bottom, inboard root, left	1	
	62086-01		SKIN ASSEMBLY - Bottom, inboard root, right	1	
-9	62087-00		SKIN ASSEMBLY - Top, inboard root, left	1	
10	62091-00		STRAP - Fuel tank attachment	1	
-11	66761-00		FITTING - Forward spar, left	1	
	66761-01		FITTING - Forward spar, right	1	
-12	83900-30		BUSHING - Front spar attachment	1	
-13	66623-00		SPAR - Leading edge, inboard, left	1	
	66623-01		SPAR - Leading edge, inboard, right	1	
-14	68118-00		GASKET - Air duct	2	
-15	68821-00		DOUBLER - Front spar	1	
-16	68620-00		TUBE ASSEMBLY - Air duct	1	
-17	62061-02		WING WALK - Forward, right	1	
-18	69212-00	C	RIB - Wing nose, Sta 36.36, left	1	32S-40000 to 32S-7240147 incl
	62066-00		RIB - Wing walk, Sta 36.22, right	1	
-19	69211-00	C	PLATE - Wing walk support, left	1	32S-40000 to 32S-7240147 incl
-20	98044-02	C	SPACER - Wing rib, Sta 57.00	1	32S-40000 to 32S-7240147 incl
-21	69213-00	C	CLIP - Wing nose rib, left	1	32S-40000 to 32S-7240147 incl
-22	463 372	C,W	GROMMET - (AN231-A4)	2	32S-40000 to 32S-7240147 incl
-23	66770-00		LEADING EDGE ASSEMBLY - Wing outboard, left	1	
	66770-01		LEADING EDGE ASSEMBLY - Wing outboard, right	1	
-24	62024-00		RIB - Wing nose, Sta 172.05, left	1	
	62024-01		RIB - Wing nose, Sta 172.05, right	1	
-25	62091-00		STRAP - Fuel tank attachment	1	
-26	62082-00	B	SKIN ASSEMBLY - Outboard, length 48.00, left	1	
	66771-00	B	SKIN ASSEMBLY - Outboard, length 47.30, left	1	
	62082-01	B	SKIN ASSEMBLY - Outboard, length 48.00, right	1	
	66771-01	B	SKIN ASSEMBLY - Outboard, length 47.30, right	1	
-27	62083-06	B	SKIN ASSEMBLY - Middle section, length 35.98, left	1	
	66772-00	B	SKIN ASSEMBLY - Middle section, length 36.68, left	1	
	62083-01	B	SKIN ASSEMBLY - Middle section, length 35.98, right	1	
	66772-01	B	SKIN ASSEMBLY - Middle section, length 36.68, right	1	
-28	62049-00		RIB - Wing nose, Sta 88.75, left	1	
	62049-01		RIB - Wing nose, Sta 88.75, right	1	
-29	62023-00		RIB - Wing nose, Sta 106.19, left	1	
	62023-01		RIB - Wing nose, Sta 106.19, right	1	
-30	62024-01		RIB - Wing nose, Sta 125.45, left	1	
	62024-00		RIB - Wing nose, Sta 125.45, right	1	
-31	62024-02		RIB - Wing nose, Sta 147.70, left	1	
	62024-03		RIB - Wing nose, Sta 147.70, right	1	

1A23 THRU 1A24

INTENTIONALLY LEFT BLANK

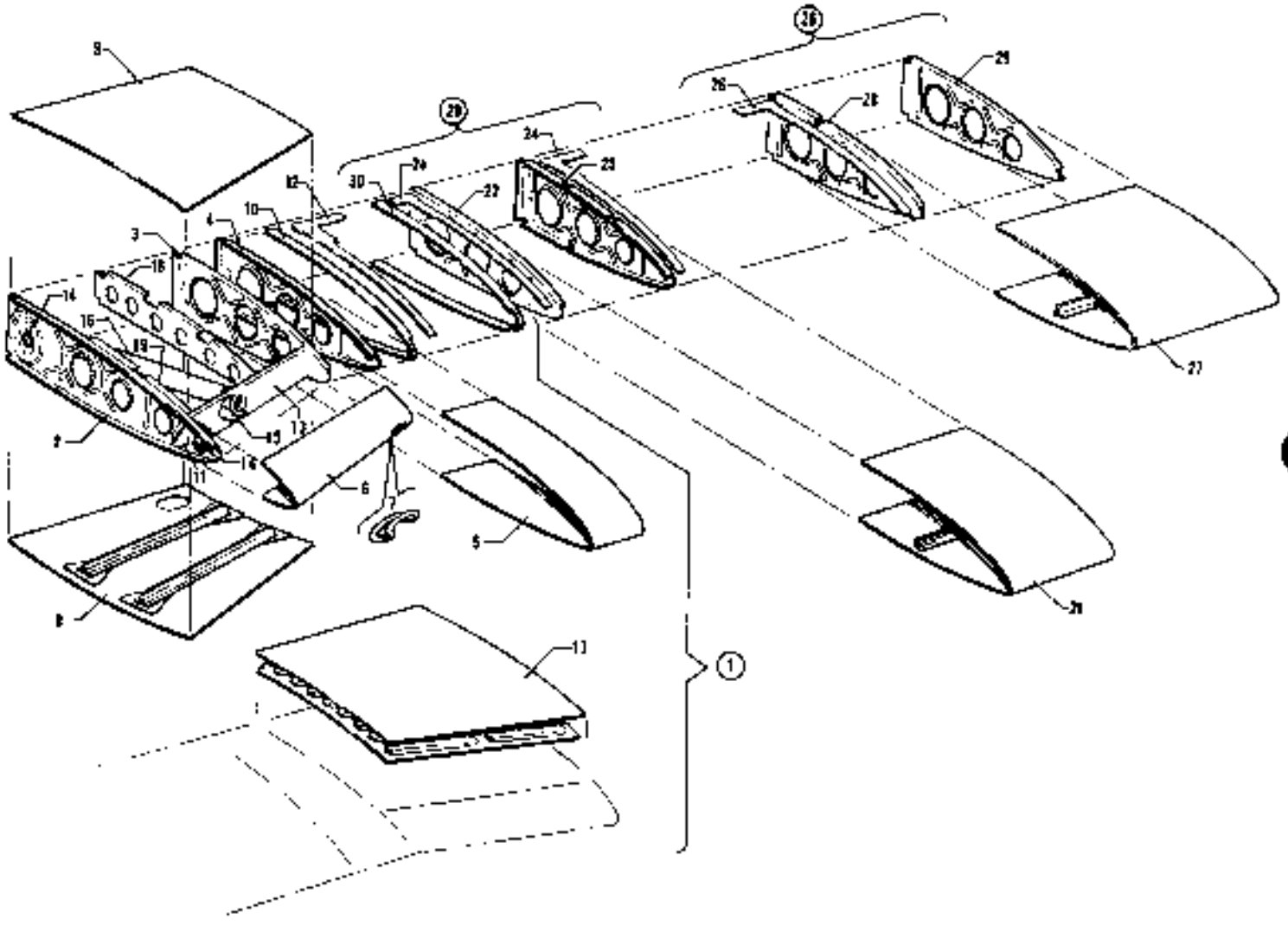

Figure 3A. Wing Leading Edge Assembly
(PA-32-300 - Serial Nos. 32-7940001 and up)
(PA-32R-300 - Serial Nos. 32R-7680001 and up)

CODE EXPLANATIONS FOR FIGURE 3A

A - Used on PA 32-300 with serial numbers 32-7940001 and up, and PA-32R-300 with serial numbers 32R-7680001 and up
B - Used on PA-32R-300 only
C - Used on PA-32-300 only

PIPER PARTS CATALOG

Figure and Index Number	Part Number	Code	NOMENCLATURE	No. Req.	SERIAL NUMBERS AFFECTED
3A-1	38121-906	B	LEADING EDGE ASSEMBLY - Wing inboard, left	1	32R-7680001 and up
	38404-906	C	LEADING EDGE ASSEMBLY - Wing inboard, left	1	32-7940001 and up
	38121-907	B	LEADING EDGE ASSEMBLY - Wing inboard, right	1	32R-7680001 and up
	38404-907	C	LEADING EDGE ASSEMBLY - Wing inboard, right	1	32-7940001 and up
-2	95639-02		* RIB - Wing nose, root, left	1	
	95639-03		* RIB - Wing nose, root, right	1	
-3	38223-00		* RIB - Wing nose, Sta. 49 25, left	1	
	38223-01		* RIB - Wing nose, Sta 49 25, right	1	
-4	62022-04		* RIB - Wing nose, Sta 57 00, left	1	
	62022-05		* RIB - Wing nose, Sta 57 00, right	1	
-5	38118-00		* SKIN ASSEMBLY - Inboard wing	1	
-6	68113-200		* SKIN ASSEMBLY - Leading edge, left	1	
	68113-201		* SKIN ASSEMBLY - Leading edge, right	1	
-7	68111-00		* * DOUBLER - Air inlet	1	
-8	38217-00		* SKIN ASSEMBLY - Bottom, inboard root, left	1	
	38217-01		* SKIN ASSEMBLY - Bottom, inboard root, right	1	
-9	62087-05		* SKIN ASSEMBLY - Top, inboard root, left	1	
-10	62091-02		* STRAP - Fuel tank attachment	1	
-11	66761-02		* FITTING - Forward spar, left	1	
	66761-03		* FITTING - Forward spar, right	1	
-12	96844-03		* SPACER - Wing rib, Sta 67 00	1	
-13	66623-00		* SPAR - Leading edge, inboard, left	1	
	66623-01		* SPAR - Leading edge, inboard, right	1	
-14	68118-00		* GASKET - Air duct	2	
-15	66621-00		* DOUBLER - Forward spar	1	
-16	66620-00		* TUBE ASSEMBLY - Air duct	1	
-17	62081-05		* WING WALK - Forward, right	1	
-18	38218-00		* RIB - Wing walk, Sta 36 92, left	1	
	38218-01		* RIB - Wing walk, Sta 36 92, right	1	
19	38211-00		* RIB - Half, wing root, left	1	
	38211-01		* RIB - Half, wing root, right	1	
-20	38121-910	B	LEADING EDGE ASSEMBLY - Wing center, left	1	32R-7680001 and up
	38404-910	C	LEADING EDGE ASSEMBLY - Wing center, left	1	32-7940001 and up
	38121-911	B	LEADING EDGE ASSEMBLY - Wing center, right	1	32R-7680001 and up
	38404-911	C	LEADING EDGE ASSEMBLY - Wing center, right	1	32-7940001 and up
-21	38167-00		* SKIN ASSEMBLY - Middle section, left	1	
	38167-01		* SKIN ASSEMBLY - Middle section, right	1	
-22	95615-07		* RIB - Wing nose, Sta 88 75, left	1	
	95615-06		* RIB - Wing nose, Sta 88 75, right	1	
-23	95615-02		* RIB - Wing nose, Sta 115 95, left	1	
	95615-03		* RIB - Wing nose, Sta 115 95, right	1	
-24	96844-00		* SPACER - Wing rib	2	
-25	38121-908	B	LEADING EDGE ASSEMBLY - Wing outboard, left	1	32R-7680001 and up
	38404-908	C	LEADING EDGE ASSEMBLY - Wing outboard, left	1	32-7940001 and up
	38121-909	B	LEADING EDGE ASSEMBLY - Wing outboard, right	1	32R-7680001 and up
	38404-909	C	LEADING EDGE ASSEMBLY - Wing outboard, right	1	32-7940001 and up
-26	96844-00		* SPACER - Wing rib	1	
-27	38119-00		* SKIN ASSEMBLY - Outboard, left	1	
	38119-01		* SKIN ASSEMBLY - Outboard, right	1	
-28	95615-02		* RIB - Wing nose, Sta 147, left	1	
	95615-03		* RIB - Wing nose, Sta 147, right	1	
-29	62024-00		* RIB - Wing nose, Sta 171 35, left	1	
	62024-01		* RIB - Wing nose, Sta 171 35, right	1	
-30	95628-00		* STRAP - Fuel tank attachment	8	

When ordering, always specify Part Number, Description and Serial Number of Aircraft

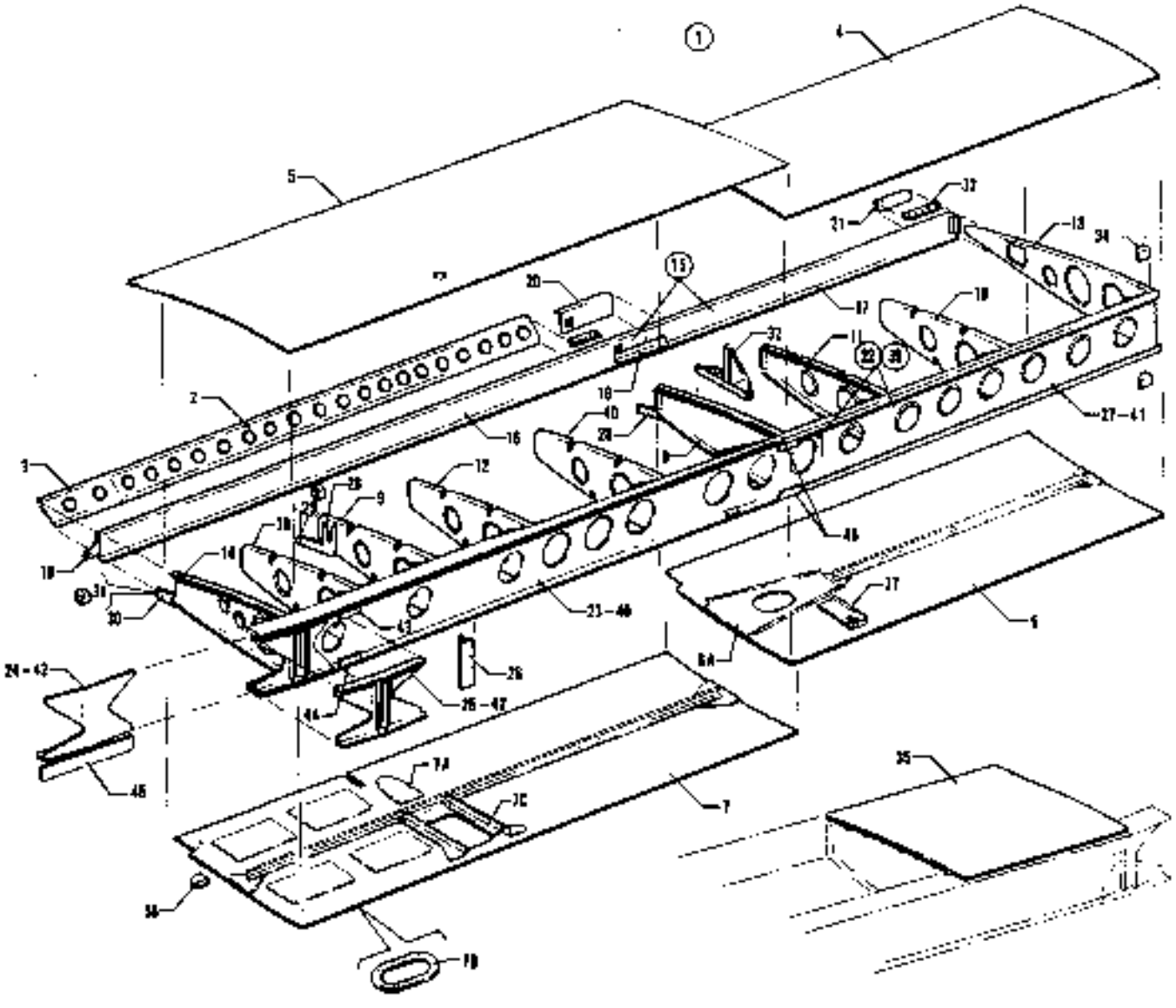

Figure 4 Wing Trailing Edge Assembly

CODE EXPLANATIONS FOR FIGURE 4

A - Used on PA-32S-300 Seaplane Model only.
B - Used on PA-32-260 with serial numbers 32-1 and up, and PA-32-300 with serial numbers 32-40000 to 32-7840222 incl.
C - Used on PA-32-300 only.
D - Reference latest revision to Piper Service Bulletin 1006, applicable to PA-32-260 with serial numbers 32-1 to 32-7800008 and PA-32-300 with serial numbers 32-4000 to 32-7940290. Bulletin provides an initial and repetitive inspection requirement to detect, treat and, if necessary, eliminate damaged parts on and around the spar cap behind the fuel tanks through replacement or repair with one or more containers of Dinotrol AV 8 p/n 89500-800.
E - Reference latest revision to Piper Service Bulletin 789, applicable to PA-32-260 with serial numbers 32-1 to 32-7300041 and PA-32-300 with serial numbers 32-4000 to 32-7340130. If aft wing spars are inaccessible at the attach fittings, install Inspection Access Hole Kit 765-106, and if required by inspection one (1) each Aft Wing Spar Modification Kit 764-998.

PIPER PARTS CATALOG

Figure and Index Number	Part Number	Code	NOMENCLATURE	No. Req.	SERIAL NUMBERS AFFECTED
4-1	66602-00	B	TRAILING EDGE ASSEMBLY - Wing aft section, left	1	
	38404-912	C	TRAILING EDGE ASSEMBLY - Wing aft section, left	1	32-7940001 and up
	66602-04	A	TRAILING EDGE ASSEMBLY - Wing aft section, left	1	32S-40000 to 32S-7240147 incl.
	66602-01	B	TRAILING EDGE ASSEMBLY - Wing aft section, right	1	
	38404-913	C	TRAILING EDGE ASSEMBLY - Wing aft section, right	1	32-7940001 and up
	66602-05	A	TRAILING EDGE ASSEMBLY - Wing aft section, right	1	32S-40000 to 32S-7240147 incl.
-2	62129-04		* STIFFENER - Outboard, left	1	
	62129-03		* STIFFENER - Outboard, right	1	
-3	62129-08		* STIFFENER - Inboard, left	1	
	62129-07		* STIFFENER - Inboard, right	1	
-4	67060-00	B	* SKIN ASSEMBLY - Top, outboard, left	1	
	67060-08	C	* SKIN ASSEMBLY - Top, outboard, left	1	32-7940001 and up
	67060-01	B	* SKIN ASSEMBLY - Top, outboard, right	1	
	67060-09	C	* SKIN ASSEMBLY - Top, outboard, right	1	32-7940001 and up
-5	99038-00	B	* SKIN ASSEMBLY - Top, inboard, left	1	
	99038-03	C	* SKIN ASSEMBLY - Top, inboard, left	1	32-7940001 and up
	99039-00	B	* SKIN ASSEMBLY - Top, inboard, right	1	
	99039-03	C	* SKIN ASSEMBLY - Top, inboard, right	1	32-7940001 and up
-6	67061-00	B	* SKIN ASSEMBLY - Bottom, outboard, left	1	
	67061-04	C	* SKIN ASSEMBLY - Bottom, outboard, left	1	32-7940001 and up
	67061-01	B	* SKIN ASSEMBLY - Bottom, outboard, right	1	
	67061-05	C	* SKIN ASSEMBLY - Bottom, outboard, right	1	32-7940001 and up
-6a	67053-00		* * DOUBLER - Aileron bellcrank support	1	
-7	99040-00	B	* SKIN ASSEMBLY - Bottom, inboard, left	1	
	99040-08	C	* SKIN ASSEMBLY - Bottom, inboard, left	1	32-7940001 and up
	99040-01	B	* SKIN ASSEMBLY - Bottom, inboard, right	1	
	99040-09	C	* SKIN ASSEMBLY - Bottom, inboard, right	1	32-7940001 and up
-7a	37897-02		* * DOUBLER ASSEMBLY - Main gear strut fairing attachment	1	
-7b	38582-02	C	* * DOUBLER ASSEMBLY - Inspection cover plate	1	32-7940001 and up
-7c	65690-00		* * DOUBLER - Fairing plate, left	1	
	65690-01		* * DOUBLER - Fairing plate, right	1	
-8	62047-06		* RIB ASSEMBLY - Sta. 106.19, left	1	
	62047-07		* RIB ASSEMBLY - Sta. 106.19, right	1	
-9	66597-00		* RIB - Sta. 49.25, left	1	
	66597-01		* RIB - Sta. 49.25, right	1	
-10	66598-00		* RIB - Sta. 86.03 and Sta. 147.00, left	2	
	66598-01		* RIB - Sta. 86.03 and Sta. 147.00, right	2	
-11	66598-01		* RIB - Sta. 125.45, left	1	
	66598-00		* RIB - Sta. 125.45, right	1	
-12	66599-00		* RIB - Sta. 64.59, left	1	
	66599-01		* RIB - Sta. 64.59, right	1	
-13	65020-06		* RIB - Wing aft, tip, left	1	
	65020-07		* RIB - Wing aft, tip, right	1	
-14	95636-00		* RIB - Wing aft, butt, left	1	
	95636-01		* RIB - Wing aft, butt, right	1	
-15	62053-00	E	* SPAR ASSEMBLY - Wing aft, left	1	
	62053-01	E	* SPAR ASSEMBLY - Wing aft, right	1	
-16	62054-00	E	* * SPAR - Aft, inboard, left	1	
	62054-01	E	* * SPAR - Aft, inboard, right	1	
-17	62055-00		* * SPAR - Aft, outboard	1	
-18	66762-00		* * PLATE - Aft spar	1	
-19	62057-00		* * DOUBLER - Aft spar, forward	1	
-20	62058-00		* * DOUBLER - Aft spar, rear, left	1	
	62058-01		* * DOUBLER - Aft spar, rear, right	1	
-21	62105-00		* * DOUBLER - Aft spar, outboard	1	
-22	62070-08	B,D	* SPAR ASSEMBLY - Wing, main, left	1	
	62070-10	A,D	* SPAR ASSEMBLY - Wing, main, left	1	32S-40000 to 32S-7240147 incl.
	62070-09	B,D	* SPAR ASSEMBLY - Wing, main, right	1	
	62070-11	A,D	* SPAR ASSEMBLY - Wing, main, right	1	32S-40000 to 32S-7240147 incl.

When ordering, always specify Part Number, Description, and Serial Number of Aircraft

PIPER PARTS CATALOG

Figure and Index Number	Part Number	Code	NOMENCLATURE	No. Req.	SERIAL NUMBERS AFFECTED
4-23	62070-06	B,D	* SPAR ASSEMBLY - Main, inboard, left	1	
	62070-07	B,D	* SPAR ASSEMBLY - Main, inboard, right	1	
-24	62072-00	B	* * DOUBLER ASSEMBLY - Aft, left	1	
	62072-01	B	* * DOUBLER ASSEMBLY - Aft, right	1	
-25	62071-00	B	* * DOUBLER ASSEMBLY - Forward, left	1	
	62071-01	B	* * DOUBLER ASSEMBLY - Forward, right	1	
-26	62079-00	B	* * TEE - Landing gear attachment	1	
-27	66582-00	B	* SPAR - Main, outboard, left	1	
	66582-01	B	* SPAR - Main, outboard, right	1	
-28	65898-04		SUPPORT ASSEMBLY - Flap outboard and center	2	
-29	452 387		* BEARING - (KP3A)	1	
-30	65898-00		SUPPORT ASSEMBLY - Flap inboard, left	1	
	65898-01		SUPPORT ASSEMBLY - Flap inboard, right	1	
-31	452 387		* BEARING - (KP3A)	1	
-32	62102-00		SUPPORT ASSEMBLY - Aileron bellcrank, left	1	
	62102-01		SUPPORT ASSEMBLY - Aileron bellcrank, right	1	
-33	62371-08		HINGE ASSEMBLY - Aileron	2	
-34	65056-00	B	FITTING ASSEMBLY - Sta. 172.05	2	
-35	69210-00	A	PLATE - Wing walk support, aft, left	1	32S-40000 to 32S-7240147 incl.
	62061-04		SKIN ASSEMBLY - Wing walk, aft, right	1	
-36	463 372	A	GROMMET - (AN231-A4)	1	32S-40000 to 32S-7240147 incl.
-37	63465-00	B	DOUBLER ASSEMBLY - Pitot head, left	1	
	38116-00	C	DOUBLER ASSEMBLY - Pitot head, left	1	32-7940001 and up
	63465-02	A	DOUBLER ASSEMBLY - Pitot head, left	1	32S-40000 to 32S-7240147 incl.
-38	66597-00	B	RIB - Sta. 36.22, left	1	
	66597-03	C	RIB - Sta. 36.22, left	1	32-7940001 and up
	66597-01	B	RIB - Sta. 36.22, right	1	
	66597-02	C	RIB - Sta. 36.22, right	1	32-7940001 and up
-39	38100-04	C	SPAR ASSEMBLY - Wing main, left	1	32-7940001 and up
	38100-05	C	SPAR ASSEMBLY - Wing main, right	1	32-7940001 and up
-40	62073-04	C,D	* SPAR - Wing, main, inboard left	1	32-7940001 and up
	62073-05	C,D	* SPAR - Wing, main, inboard right	1	32-7940001 and up
-41	66582-00	C,D	* SPAR - Wing, main, outboard left	1	32-7940001 and up
	66582-01	C,D	* SPAR - Wing, main, outboard right	1	32-7940001 and up
-42	38099-00	C	* DOUBLER - Main spar root, forward and aft	2	32-7940001 and up
-43	38098-00	C	* ANGLE - Main spar, upper, left	1	32-7940001 and up
	38098-01	C	* ANGLE - Main spar, upper, right	1	32-7940001 and up
-44	38097-04	C	* ANGLE - Main spar, lower left, forward	1	32-7940001 and up
	38097-05	C	* ANGLE - Main spar, lower right, forward	1	32-7940001 and up
-45	38097-01	C	* ANGLE - Main spar, lower left, aft	1	32-7940001 and up
	38097-00	C	* ANGLE - Main spar, lower right, aft	1	32-7940001 and up
-46	38115-00	C	* ANGLE - Main spar, lower left, upper right	1	32-7940001 and up
	38115-01	C	* ANGLE - Main spar, lower right, upper left	1	32-7940001 and up

When ordering, always specify Part Number, Description, and Serial Number of Aircraft

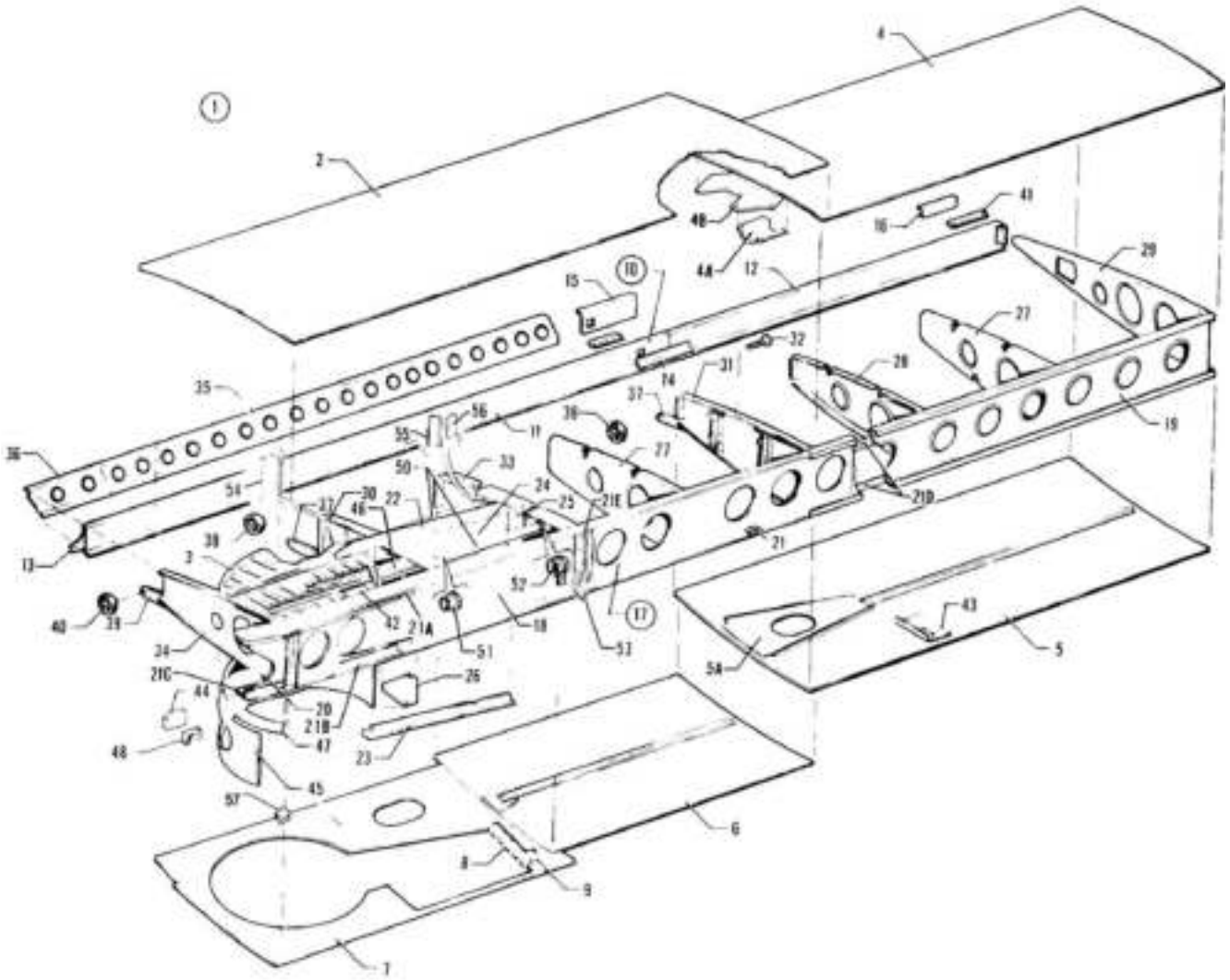

Figure 5 Wing Trailing Edge

CODE EXPLANATIONS FOR FIGURE 5

A - Reference latest revision to Piper Service Bulletin 1161, applicable to PA-32R-300 with serial numbers 32R-7680001 to 32R-7880068 The rib assembly on the aft side of the main wing spar at wing station 49.25 may develop a crack, located vertically along the bend radius of the flange common to the main wing spar and the side brace attach fitting. To repair damage on the left hand rib, install Kit 767-397; on the right hand rib, install Kit 767-398.

B - Reference latest revision to Piper Service Bulletin 1006, applicable to PA-32R-300. Bulletin provides an initial and repetitive inspection requirement to detect, treat and, if necessary, eliminate damaged parts on and around the spar cap behind the fuel tanks through replacement or repair with one or more containers of Dinotrol AV 8 p/n 89500-800.

PIPER PARTS CATALOG

Figure and Index Number	Part Number	Code	NOMENCLATURE	No. Req.	SERIAL NUMBERS AFFECTED
5-1	38121-912		TRAILING EDGE ASSEMBLY - Wing aft section, left	1	
	38121-913		TRAILING EDGE ASSEMBLY - Wing aft section, right	1	
-2	38121-957		* SKIN ASSEMBLY - Top, inboard, left	1	
	38121-958		* SKIN ASSEMBLY - Top, inboard, right	1	
-3	67673-00		** PAN - Wheel well	1	
-4	67060-04		* SKIN ASSEMBLY - Top, outboard, left	1	
	67070-05		* SKIN ASSEMBLY - Top, outboard,right	1	
-4a	95678-02		** BRACKET - Aileron bellcrank support	1	
-4b	95021-00		** DOUBLER - Aileron bellcrank support, left	1	
	95021-01		** DOUBLER - Aileron bellcrank support, right	1	
-5	67061-04		* SKIN ASSEMBLY - Bottom, outboard, left	1	
	67061-05		* SKIN ASSEMBLY - Bottom, outboard, right	1	
-5a	67053-00		** DOUBLER - Aileron bellcrank support	1	
-6	38206-00		* SKIN ASSEMBLY - Bottom, center, left	1	
	38206-01		* SKIN ASSEMBLY - Bottom, center, right	1	
-7	67690-08		* SKIN ASSEMBLY - Bottom, inboard, left	1	
	67690-09		* SKIN ASSEMBLY - Bottom, inboard, right	1	
-8	67095-00		** HINGE - Main gear door, left	1	
	67095-01		** HINGE - Main gear door, right	1	
-9	67096-00		** BRACKET - Main gear up switch, left	1	
	67096-01		** BRACKET - Main gear up switch, right	1	
-10	62053-00		* SPAR ASSEMBLY - Wing, aft, left	1	
	62053-01		* SPAR ASSEMBLY - Wing, aft, right	1	
-11	62054-00		** SPAR - Aft, inboard, left	1	
	62054-01		** SPAR - Aft, inboard, right	1	
-12	62055-00		** SPAR - Aft, outboard	1	
-13	66762-00		** PLATE - Aft spar	1	
-14	62057-00		** DOUBLER - Aft spar, forward	1	
-15	62058-00		** DOUBLER - Aft spar, rear, left	1	
	62058-01		** DOUBLER - Aft spar, rear, right	1	
-16	62105-00		** DOUBLER - Aft spar, outboard	1	
-17	38100-00		* SPAR ASSEMBLY - Wing, main, left	1	
	38100-01		* SPAR ASSEMBLY - Wing, main, right	1	
-18	67069-00	B	** SPAR - Wing, main, inboard, left	1	
	67069-01	B	** SPAR - Wing, main, inboard, right	1	
-19	66582-00	B	** SPAR - Wing, main, outboard, left	1	
	66582-01	B	** SPAR - Wing, main, outboard, right	1	
-20	38099-00		** DOUBLER - Main spar root	2	
-21	66529-00		** CHANNEL - Gang	1	
-21a	38098-00		** ANGLE - Main spar, upper left	1	
	38098-01		** ANGLE - Main spar, upper right	1	
-21b	38097-02		** ANGLE - Main spar, lower left, forward	1	
	38097-03		** ANGLE - Main spar, lower right, forward	1	
-21c	38097-01		** ANGLE - Main spar, lower left, aft	1	
	38097-00		** ANGLE - Main spar, lower right, aft	1	
-21d	38115-00		** ANGLE - Main spar, lower left, upper right	2	
	38115-01		** ANGLE - Main spar, lower right, upper left	2	
-21e	38195-00		** ANGLE - Main gear trunnion assembly	2	
-22	67097-02	B	* CAP - False spar, top, left	1	
	67097-03	B	* CAP - False spar, top, right	1	
-23	67689-02	B	* CAP - False spar, bottom, left	1	
	67689-03	B	* CAP - False spar, bottom, right	1	
-24	67079-00		* WEB - False spar, left	1	
	67079-01		* WEB - False spar, right	1	
-25	37487-00		* ANGLE - Wheel well, forward, sta. 69.24	1	
-26	67691-00		* BRACKET - Wheel well, left	1	
	67691-01		* BRACKET - Wheel well, right	1	

When ordering, always specify Part Number, Description, and Serial Number of Aircraft

PIPER PARTS CATALOG

Figure and Index Number	Part Number	Code	NOMENCLATURE	No. Req.	SERIAL NUMBERS AFFECTED
5-27	66598-00		* RIB - Sta. 86.03 and Sta. 147, left	2	
	66598-01		* RIB - Sta. 86.03 and Sta. 147, right	2	
-28	37388-01		* RIB - Sta. 125.45, left	1	
	37388-00		* RIB - Sta. 125.45, right	1	
-29	65020-06		* RIB - Sta. 172.05, left	1	
	65020-07		* RIB - Sta. 172.05, right	1	
-30	78475-02	A	* RIB ASSEMBLY - Sta. 49.25, left	1	
	78475-03	A	* RIB ASSEMBLY - Sta. 49.25, right	1	
-31	95025-00		* RIB ASSEMBLY - Sta. 106.19, left	1	
	95025-01		* RIB ASSEMBLY - Sta. 106.19, right	1	
-32	66614-00		* * STOP ASSEMBLY - Aileron bellcrank	2	
-33	38210-00		* RIB ASSEMBLY - Sta. 69.24, left	1	
	38210-01		* RIB ASSEMBLY - Sta. 69.24, right	1	
-34	95636-00		* RIB - Sta. 24.24, left	1	
	95636-01		* RIB - Sta. 24.24, right	1	
-35	62129-04		* STIFFENER - Left outboard	1	
	62129-03		* STIFFENER - Right outboard	1	
-36	62129-08		* STIFFENER - Left outboard	1	
	62129-07		* STIFFENER - Right outboard	1	
-37	65898-04		* SUPPORT ASSEMBLY - Flap outboard and center	2	
-38	452 387		* * BEARING - (KP3A)	1	
-39	65898-00		* SUPPORT ASSEMBLY - Flap inboard, left	1	
	65898-01		* SUPPORT ASSEMBLY - Flap inboard, right	1	
-40	452 387		* * BEARING - (KP3A)	1	
-41	62371-08		* HINGE ASSEMBLY - Aileron	2	
-42	67071-00		* BRACKET - Main gear cylinder, left	1	
	67071-01		* BRACKET - Main gear cylinder, right	1	
-43	38116-00		* DOUBLER - Pitot static head, left	1	
-44	38128-00		* VENT ASSEMBLY - Fuel	1	
-45	67694-00		* WEB - Wheel well	1	
-46	67670-00		* COVER - Control cable, left	1	
	67670-01		* COVER - Control cable, right	1	
-47	67687-00		* ANGLE - Wheel well, left	1	
	67687-01		* ANGLE - Wheel well, right	1	
-48	67677-00		* BRACKET - Pulley, aft wing, left	1	
	67677-01		* BRACKET - Pulley, aft wing, right	1	
-49	67678-00		* BRACKET ASSEMBLY - Pulley, aft wing, left	1	
	67678-01		* BRACKET ASSEMBLY - Pulley, aft wing, right	1	
-50	63904-24		* HOSE - Aileron cable protection	2	
-51	453 901		* BUSHING - (PS10064-1093-15)	4	
-52	454 862		* CLAMP - (PS10017-2-14)	2	
-53	519 851		* SCREW - (MS24622-30)	2	
	406 415		* NUT - (NAS395-16-3)	2	
-54	67065-00		* ANGLE - False spar	1	
-55	78159-00		* ANGLE - Wheel well, aft, Sta. 69.24	1	
-56	68817-35		* PLATE - False spar	1	
-57	63078-17		* PAD - Bumper, rubber	2	

When ordering, always specify Part Number, Description, and Serial Number of Aircraft

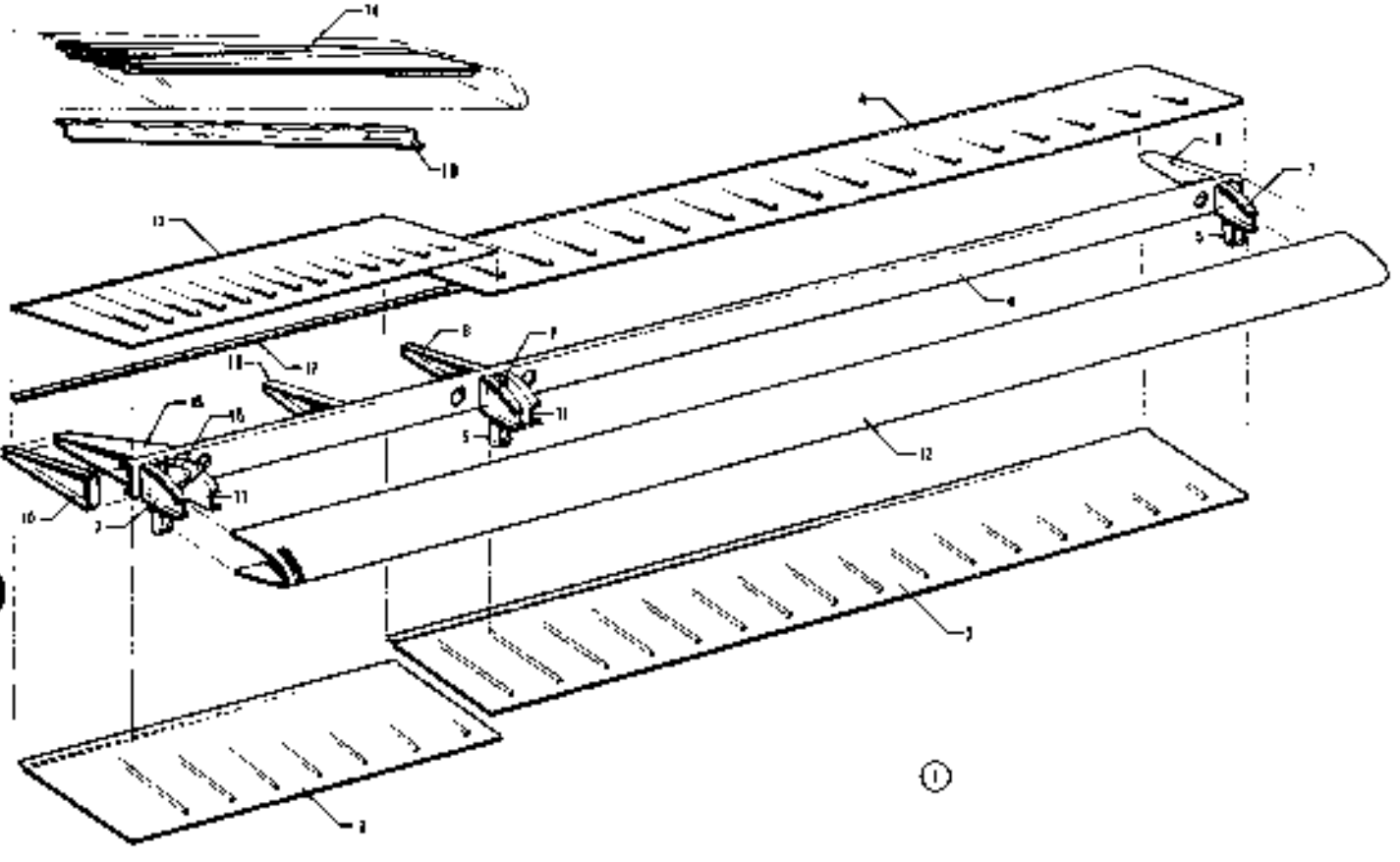

Figure 6 Flap Assembly

CODE EXPLANATIONS FOR FIGURE 6

A - Used on Flap Assembly Part No 65590-00 only Ascertain flap assembly part number, stamped on identification plate, before ordering replacement part
B - Used on Flap Assembly Part No 65591-00 only Ascertain flap assembly part number, stamped on identification plate, before ordering replacement part
C - Used on PA-32-260 with serial numbers 32-451 and up, PA-32-300 with serial numbers 32-40000 and up, and PA-32R-300
D - Used on PA-32-260 only

PIPER PARTS CATALOG

Figure and Index Number	Part Number	Code	NOMENCLATURE	No. Req.	SERIAL NUMBERS AFFECTED
6-1	68123-00	D	FLAP ASSEMBLY - Left	1	32-1 to 32-450 inclusive
	68123-03	D	FLAP ASSEMBLY - Right	1	32-1 to 32-450 inclusive
	65591-00	C	FLAP ASSEMBLY - Left	1	
	65590-01	C	FLAP ASSEMBLY - Right	1	
-2	62321-02	D	* SKIN - Flap, bottom, left	1	32-1 to 32-450 inclusive
	62321-03	D	* SKIN - Flap, bottom, right	1	32-1 to 32-450 inclusive
	65592-00	C	* SKIN - Flap, bottom, left, inboard	1	
	65592-01	C	* SKIN - Flap, bottom, right, inboard	1	
-3	65588-00	C	* SKIN - Flap, bottom, left and right, outboard	1	
-4	62322-03	D	* SKIN - Flap, top, left, outboard	1	32-1 to 32-450 inclusive
	62322-02	D	* SKIN - Flap, top, right, outboard	1	32-1 to 32-450 inclusive
	65589-00	C	* SKIN - Flap, top, left and right, outboard	1	
-5	62323-00	D	* BRACKET - Flap hinge center and outboard	2	32-1 to 32-450
	65899-00	C	* BRACKET - Flap hinge center and outboard	2	
-6	62327-00		* SPAR - Flap	1	
-7	62328-00		* RIB - Left flap	3	
	62328-01		* RIB - Right flap	3	
-8	62329-00	D	* RIB - Flap, left and right, Sta. 49	1	32-1 to 32-450 inclusive
	62332-02	C	* RIB - Flap, left, Sta. 49	1	
	62332-00	C	* RIB - Flap, right, Sta. 49	1	
-9	62330-00		* RIB - Flap, left	1	
	62330-01		* RIB - Flap, right	1	
-10	62331-00		* RIB - Flap, left, inboard	1	
	62331-01		* RIB - Flap, right, inboard	1	
-11	62328-01		* RIB - Left flap	2	
	62328-00		* RIB - Right flap	2	
-12	62333-00	D	* SKIN - Flap, left, nose	1	32-1 to 32-450 inclusive
	62333-01	D	* SKIN - Flap, right, nose	1	32-1 to 32-450 inclusive
	65586-04	C	* SKIN - Flap, left, nose	1	
	65586-05	C	* SKIN - Flap, right, nose	1	
-13	62334-02	D	* SKIN - Flap, top, left, inboard	1	32-1 to 32-450 inclusive
	62334-00	D	* SKIN - Flap, top, right, inboard	1	32-1 to 32-450 inclusive
	65594-00	A,C	* SKIN - Flap, top, left, inboard	1	
	65587-00	B,C	* SKIN - Flap, top, left inboard	1	
	65594-01	C	* SKIN - Flap, top, right, inboard	1	
-14	62335-02	D	* CORRUGATION - Flap, left, inboard	1	32-1 to 32-450 inclusive
	62335-00	D	* CORRUGATION - Flap, right, inboard	1	32-1 to 32-450 inclusive
	65593-00	C	* CORRUGATION - Flap, left, inboard	1	
	65593-01	C	* CORRUGATION - Flap, right, inboard	1	
-15	62336-04	A	* DOUBLER ASSEMBLY - Left	1	
	62336-00	B	* DOUBLER ASSEMBLY - Left	1	
	62336-08		* DOUBLER ASSEMBLY - Right	1	
-16	62324-00		* HINGE - Flap, inboard, left	1	
	62324-01		* HINGE - Flap, inboard, right	1	
-17	62320-03		* STRIP - Flap rear edge	1	
-18	62332-02	D	* RIB - Flap, left, Sta. 41	1	32-1 to 32-450 inclusive
	62332-00	D	* RIB - Flap, right, Sta. 41	1	32-1 to 32-450 inclusive
-19	62320-04	D	* ZEE - Flap, inboard right	1	32-1 to 32-450 inclusive
	65595-01	C	* ZEE - Flap, inboard right	1	

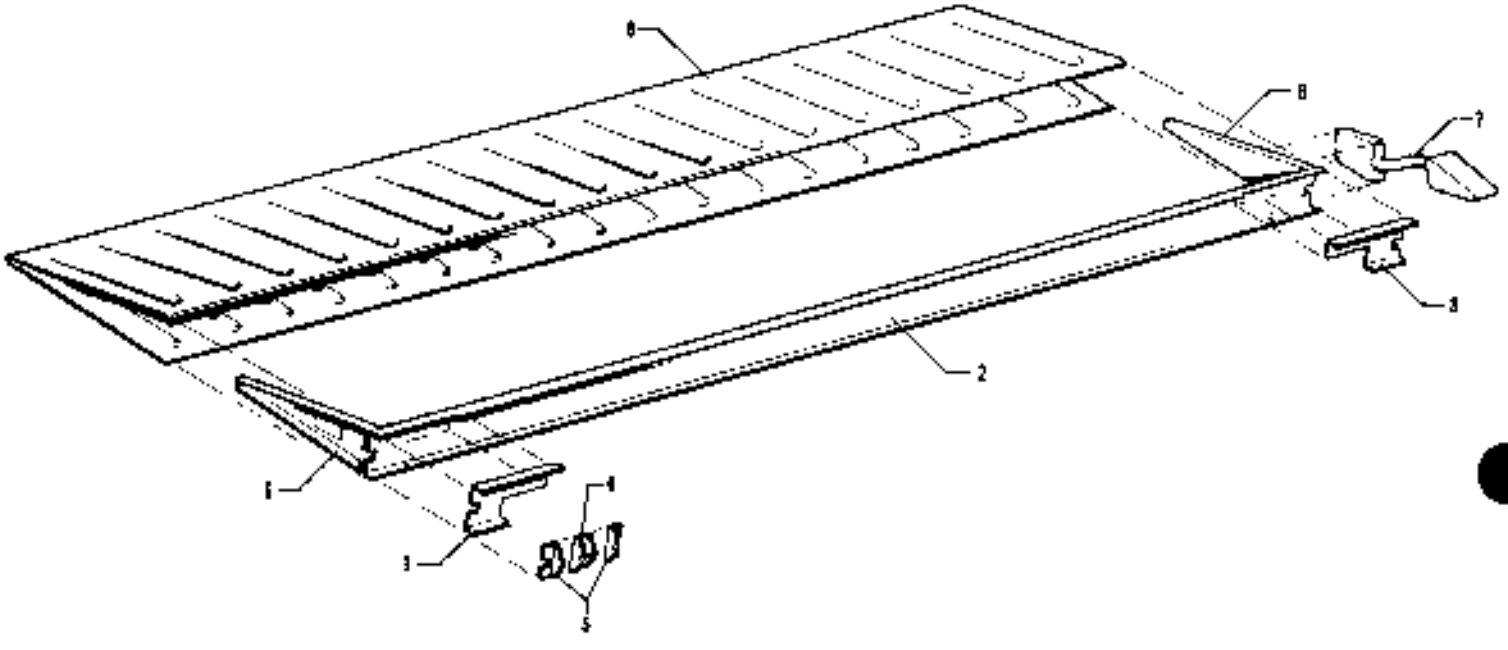

Figure 7. Aileron Assembly

CODE EXPLANATIONS FOR FIGURE 7

A - Used on PA-32-260 with serial numbers 32-451 to 32-1113 inclusive, and PA-32-300 with serial numbers 32-40000 to 32-40620 inclusive.
B - Used on PA-32-260 with serial numbers 32-1114 and up, PA-32-300 with serial numbers 32-40621 and up, and PA-32R-300.
C - Used on PA-32-260 with serial numbers 32-451 and up, PA-32-300 with serial numbers 32-40000 and up, and PA-32R-300.
D - Reference latest revision to Piper Service Letter 581, applicable to PA-32-260 with serial numbers 32-04 and 32-1 to 32-1191 inclusive, and PA-32-300 and PA-32S-300 with serial numbers 32-15, 32-21, 32-40000 to 32-40769 incl. If cracks are found on the aileron hinge doublers in the hinge doubler bend radii, install Aileron Hinge Doubler Replacement Kit 760-540.

PIPER PARTS CATALOG

Figure and Index Number	Part Number	Code	NOMENCLATURE	No. Req.	SERIAL NUMBERS AFFECTED
7-1	68105-00		AILERON ASSEMBLY - Left	1	32-1 to 32-450 inclusive
	68129-00	A	AILERON ASSEMBLY - Left	1	
	66767-00	B	AILERON ASSEMBLY - Left	1	
	68105-01		AILERON ASSEMBLY - Right	1	32-1 to 32-450 inclusive
	68129-01	A	AILERON ASSEMBLY - Right	1	
	66767-01	B	AILERON ASSEMBLY - Right	1	
-2	62361-00		* SPAR ASSEMBLY - Aileron, left	1	
	62361-01		* SPAR ASSEMBLY - Aileron, right	1	
-3	62373-00	D	* * DOUBLER - Aileron, inboard left aileron, outboard right aileron	1	
	62373-01	D	* * DOUBLER - Aileron, outboard left aileron, outboard right aileron	1	
-4	62367-00		* * CHANNEL - Aileron push rod	1	
-5	62372-00		* * ANGLE - Push rod, inboard left aileron, outboard right aileron	1	
	62372-01		* * ANGLE - Push rod, outboard left aileron, inboard right aileron	1	
-6	65265-00		* RIB - Aileron, left inboard, right outboard	1	
	65265-01		* RIB - Aileron, right inboard, left outboard	1	
-7	66766-00		* BALANCE WEIGHT ASSEMBLY - Left	1	
	66766-01		* BALANCE WEIGHT ASSEMBLY - Right	1	
-8	65299-02		* SKIN - Aileron, left	1	32-1 to 32-450 inclusive
	68106-00	C	* SKIN - Aileron, left	1	
	65299-03		* SKIN - Aileron, right	1	32-1 to 32-450 inclusive
	68106-01	C	* SKIN - Aileron, right	1	

When ordering, always specify Part Number, Description, and Serial Number of Aircraft

1B18 THRU 1B24

INTENTIONALLY LEFT BLANK

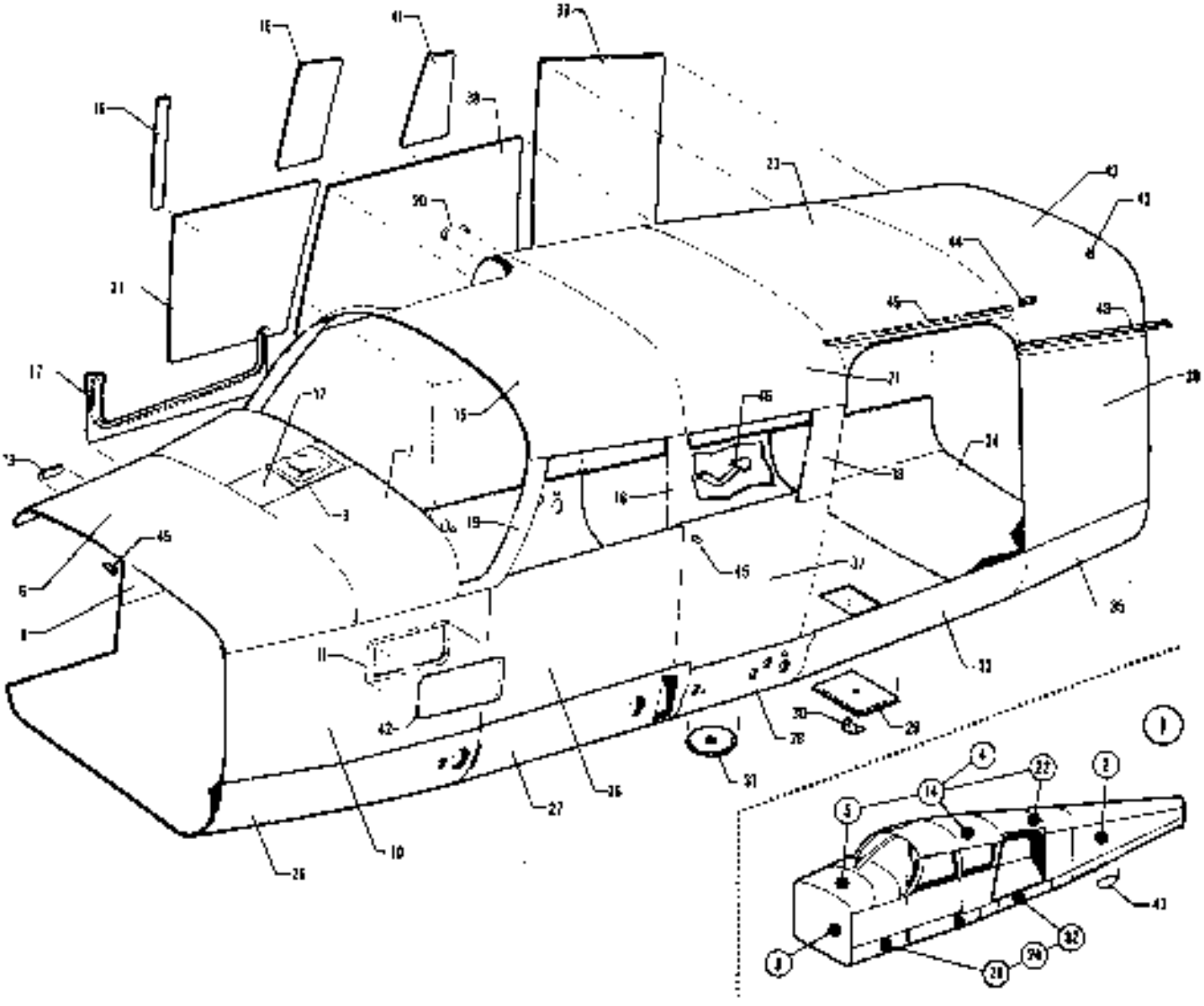

ISSUED: JUNE 1975

PA-32-260
PA-32-300
PA-32R-300

Figure 8. Complete Fuselage

CODE EXPLANATIONS FOR FIGURE 8

A - Used on PA-32-260 only
B - Used on PA-32-300 only
C - Used on PA-32S-300 Seaplane Model only
D - Used if cargo door is installed
E - Used on PA-32R-300 only
F - See Figure 16 for component parts
G - Used on PA 32-260 with serial numbers 32-1 to 32-7200065 incl., and PA-32-300 with serial numbers 32-40000 to 32-7240147 incl
H - Used on PA-32-260 with serial numbers 32-7400001 and up, and PA-32-300 with serial numbers 32-7440001 and up
J - Used on PA-32-260 with serial numbers 32-1 to 32-7300075 incl., and PA-32-300 with serial numbers 32-40000 to 32-7340201 incl
K - Used on PA-32-300 if air conditioning is installed
L - See Figure 9 for balance of component parts
M - See Figure 10 for balance of component parts
N - Used on PA-32-260 with serial numbers 32-1 to 32-1110 incl., and PA-32-300 with serial numbers 32-40000 to 32-40565 incl
O - Used on PA 32-260 with serial numbers 32-1111 to 32-7200065 incl., and PA-32-300 with serial numbers 32-40566 to 32-7240147 incl
P - Used on PA-32-260 with serial numbers 32-7300001 to 32-7500059 incl., and PA-32-300 with serial numbers 32-7340001 to 32-7540198 incl
Q - Used on PA-32-260 with serial numbers 32-7300001 to 32-7400061 incl., and PA-32-300 with serial numbers 32-7340001 to 32-7440182 incl
R - Refer to Figure 68 if optional baggage compartment light is installed
S - Used on PA-32-260 with serial numbers 32-1111 to 32-1320 incl., and PA-32-300 with serial numbers 32-40566 to 32-41018 incl
T - Used on PA-32-260 with serial numbers 32-7100001 to 32-7200065 incl., and PA-32-300 with serial numbers 32-7140001 to 32-7240147 incl
U - Used on PA-32-260 with serial numbers 32-7800001 and up, PA-32-300 with serial numbers 32-7840001 and up, and PA-32R-300 with serial numbers 32R-7880001 and up
V - Used on PA-32-260 with serial numbers 32-7200001 to 32-7300076 incl., and PA-32-300 with serial numbers 32-7240001 to 32-7340201 incl
W - These parts must be ordered from Service Spares Department, Piper Aircraft, Lock Haven, Penna.
X - See Figure 11 for balance of component parts
Y - Used on PA-32-260 with serial numbers 32-1 to 32-1250 incl., and PA-32-300 with serial numbers 32-40000 to 32-40850 incl
Z - Used on PA-32-260 with serial numbers 32-1251 to 32-7100038 incl., and PA-32-300 with serial numbers 32-40851 to 32-7140086 incl
AA - Used on PA-32-260 with serial numbers 32-7100001 to 32-7100038 incl., and PA-32-300 with serial numbers 32-7140001 to 32-7140086 incl
AB - See Figure 12 for balance of component parts
AC - Used on PA-32-260 with serial numbers 32-7200001 to 32-7200065 incl., and PA-32-300 with serial numbers 32-7240001 and up
AD - Used on PA-32-260 with serial numbers 32-1 to 32-1320 incl., and PA-32-300 with serial numbers 32-40000 to 32-41018 incl
AE - See Figure 14 for balance of component parts.
AF - Used on PA-32-260 with serial numbers 32-1 to 32-7100038 incl., and PA-32-300 with serial numbers 32-40000 to 32-7140086 incl
AG - Used on PA-32-260 with serial numbers 32-7200001 to 32-7800001 incl., and PA-32-300 with serial numbers 32-7240001 to 32-7840029 incl
AH - See Figure 13 for balance of component parts
AJ - Used on PA-32-260 with serial numbers 32-7200001 to 32-7200065 incl., and PA-32-300 with serial numbers 32-7240001 to 32-7240147 incl
AK - Used on PA-32-260 with serial numbers 32-378 to 32-7800001 incl., and PA-32-300 with serial numbers 32-40000 to 32-7840029 incl
AL - Used on PA-32-300 and PA-32R-300 only
AM - Used on PA-32-260 with serial numbers 32-7600037 and up, PA-32-300 with serial numbers 32-7540120 and up, and PA-32R-300
AN - No longer available. Order part for later serial numbers
AD - Used on PA-32-260 with serial numbers 32-7500099 and up, PA-32-300 with serial numbers 32-7540135 and up, and PA-32R-300
AP - Used on PA-32-300 with serial numbers 32-7440001 and up, and PA-32R-300 if air conditioning is installed
AQ - Used on PA-32-260 with serial numbers 32-7800001 and up, PA-32-300 with serial numbers 32-7840001 and up, and PA-32R-300
AR - Used on PA-32-260 with serial numbers 32-7400001 and up, PA-32-300 with serial numbers 32-7440001 and up, and PA-32R-300
AS - Used on PA-32-260 with serial numbers 32-1 to 32-7800001 incl., and PA-32-300 with serial numbers 32-40000 to 32-7840029 incl
AT - Used on PA-32-260 with serial numbers 32-7800002 and up, and PA-32-300 with serial numbers 32-7840030 and up
AU - Used on PA-32-260 with serial numbers 32-7800001 and up, PA-32-300 with serial numbers 32-7840001 and up, and PA-32R-300
AV - Used on PA-32-260 with serial numbers 32-7800002 and up, PA-32-300 with serial numbers 32-7840030 and up, and PA-32R-300
AW - Used on PA-32-260 with serial numbers 32-1 to 32-7800001 incl., PA-32-300 with serial numbers 32-40000 to 32-7840029 incl., and PA-32R-300 with serial numbers 32R-7680001 to 32R-7680013 incl

CODE EXPLANATIONS FOR FIGURE 8 (cont.)

AX - Used on PA-32-260 with serial numbers 32-7600002 and up, PA-32-300 with serial numbers 32-7640030 and up, and PA-32R-300 with serial numbers 32R-7680014 and up

AY - Used on PA-32-260 with serial numbers 32-7400001 to 32-7600001 incl, and PA-32-300 with serial numbers 32-7440001 to 32-7640029 incl

AZ - Used on PA-32-260 with serial numbers 32-1 to 32-7700023 incl, PA-32-300 with serial numbers 32-40000 to 32-7740113 incl, and PA-32R-300 with serial numbers 32R-7680001 to 32R-7780649 incl

BA - Used on PA-32-260 with serial numbers 32-7600002 and up, and PA-32-300 with serial numbers 32-7640030 to 32-7840222 incl

BB - Used on PA-32-260 with serial numbers 32-7600002 to 32-7700023 incl, PA-32-300 with serial numbers 32-7640030 to 32-7740113 incl

PIPER PARTS CATALOG

Figure and Index Number	Part Number	Code	NOMENCLATURE	No Req	SERIAL NUMBERS AFFECTED
8-	69200	A	DRAWING - Fuselage Assembly (Complete)		32-1 to 32-1110 inclusive
	69352	A	DRAWING - Fuselage Assembly (Complete)		32 1111 to 32-7200065 incl
	69662	A	DRAWING Fuselage Assembly (Complete)		32-7300001 and up
	69030	B	DRAWING - Fuselage Assembly (Complete)		32-40000 to 32-40565 incl
	69352	B	DRAWING - Fuselage Assembly (Complete)		32-40566 to 32-7240147 incl
	69662	B	DRAWING - Fuselage Assembly (Complete)		32-7340001 and up
	69552	C	DRAWING - Fuselage Assembly (Complete)		32S-40000 to 32S-7240147 incl
	69101	D,AS	DRAWING - Fuselage Assembly (Complete)		
	69690	D,AT	DRAWING - Cargo Door Fuselage Assembly		
	69663	C	DRAWING Cargo Door Fuselage Assembly		32S-40000 to 32S-7240147 incl
	38001	E	DRAWING - Fuselage Assembly		
-1	68201-00	A	FUSELAGE ASSEMBLY	1	32 1 to 32 375 inclusive
	68201 02	A	FUSELAGE ASSEMBLY	1	32-376 to 32-450 inclusive
	68201-03	A	FUSELAGE ASSEMBLY	1	32-451 to 32-1110 inclusive
	68201-05	A	FUSELAGE ASSEMBLY	1	32-1111 to 32-1250 inclusive
	68201-07	A	FUSELAGE ASSEMBLY	1	32-1251 to 32-1320 inclusive
	68201-09	A	FUSELAGE ASSEMBLY	1	32 7100001 to 32-7100038 incl
	68201-11	A	FUSELAGE ASSEMBLY	1	32-7200001 to 32-7200065 incl
	68201-04	B	FUSELAGE ASSEMBLY	1	32-40000 to 32-40565 inclusive
	68201-06	B	FUSELAGE ASSEMBLY	1	32-40566 to 32-40850 inclusive
	68201-08	B	FUSELAGE ASSEMBLY	1	32-40851 to 41018 inclusive
	68201-10	B	FUSELAGE ASSEMBLY	1	32-7140001 to 32-7140086 incl
	68201-12	B	FUSELAGE ASSEMBLY	1	32-7240001 to 32-7240147 incl
	69101-00	A,D	FUSELAGE ASSEMBLY	1	32-1 to 32-1110 inclusive
	69101-03	A,D	FUSELAGE ASSEMBLY	1	32-1111 to 32-1250 inclusive
	69101-05	A,D	FUSELAGE ASSEMBLY	1	32-1251 to 32-1320 inclusive
	69101-08	A,D	FUSELAGE ASSEMBLY	1	32-7100001 to 32-7100038 incl
	69101-10	A,D	FUSELAGE ASSEMBLY	1	32-7200001 to 32-7200065 incl
	69101-12	A,D	FUSELAGE ASSEMBLY	1	32 7300001 to 32-7300076 incl
	69101-14	A,D	FUSELAGE ASSEMBLY	1	32-7400001 to 32-7400061 incl
	69101-19	A,D	FUSELAGE ASSEMBLY	1	32-7600001 to 32-7600001 incl
	69890-00	A,D	FUSELAGE ASSEMBLY	1	32-7600002 to 32-7600033 incl
	69890-03	A,D	FUSELAGE ASSEMBLY	1	32-7700001 and up
	69101-02	B,D	FUSELAGE ASSEMBLY	1	32-40000 to 32-40565 inclusive
	69101-04	B,D	FUSELAGE ASSEMBLY	1	32-40566 to 32-40850 inclusive
	69101-06	B,D	FUSELAGE ASSEMBLY	1	32-40851 to 32-41018 inclusive
	69101-09	B,D	FUSELAGE ASSEMBLY	1	32-7140001 to 32-7140086 incl
	69101-11	B,D	FUSELAGE ASSEMBLY	1	32-7240001 to 32-7240147 incl
	69101-13	B,D	FUSELAGE ASSEMBLY	1	32-7340001 to 32-7340201 incl
	69101-15	B,D	FUSELAGE ASSEMBLY	1	32-7440001 to 32-7440182 incl
	69101-18	B,D	FUSELAGE ASSEMBLY	1	32 7540001 to 32-7640029 incl
	69890-02	B,D	FUSELAGE ASSEMBLY	1	32-7640030 to 32-7640142 incl
	69890-04	B,D	FUSELAGE ASSEMBLY	1	32-7740001 to 28-7840222 incl
	69890-06	B,D	FUSELAGE ASSEMBLY	1	32-7840001 and up
	69553-00	C	FUSELAGE ASSEMBLY	1	32S-40000 to 32S-40850 inclusive
	69553-02	C	FUSELAGE ASSEMBLY	1	32S-40851 to 32S-41018 inclusive
	69553-03	C	FUSELAGE ASSEMBLY	1	32S-7140001 to 32S-7140086 incl
	69553-04	C	FUSELAGE ASSEMBLY	1	32S-7240001 to 32S-7240147 incl
	38001-00	E	FUSELAGE ASSEMBLY	1	32R-7680001 to 32R-7680538 incl
	38001-05	E	FUSELAGE ASSEMBLY	1	32R-7780001 and up
-2	99466-06	F,G	* AFT SECTION - Fuselage	1	
	99466-18	F,K	* AFT SECTION - Fuselage	1	32-40853, 32-7240056 to 32-7240147 inclusive
	99466-07	F,J	* AFT SECTION - Fuselage	1	
	99466-19	F,K	* AFT SECTION - Fuselage	1	32-40853, 32-7240056 to 32-7340201 inclusive
	99466-11	F,AR	* AFT SECTION - Fuselage	1	
	99466-20	F,AP	* AFT SECTION - Fuselage	1	32-7440001 and up

When ordering, always specify Part Number, Description and Serial Number of Aircraft

PIPER PARTS CATALOG

Figure and Index Number	Part Number	Code	NOMENCLATURE	No. Req.	SERIAL NUMBERS AFFECTED
B-3	68202-00	A	* COCKPIT ASSEMBLY - Fuselage	1	32-1 to 32-375 inclusive
	68202-02	A	* COCKPIT ASSEMBLY - Fuselage	1	32-376 to 32-450 inclusive
	68202-03	A	* COCKPIT ASSEMBLY - Fuselage	1	32-451 to 32-1110 inclusive
	69436-00	A	* COCKPIT ASSEMBLY - Fuselage	1	32-1111 to 32-1250 inclusive
	69436-03	A	* COCKPIT ASSEMBLY - Fuselage	1	32-1251 to 32-1320 inclusive
	69436-05	A	* COCKPIT ASSEMBLY - Fuselage	1	32-7100001 to 32-7100038 incl
	69436-07	A	* COCKPIT ASSEMBLY - Fuselage	1	32-7200001 to 32-7200055 incl
	68202-04	B	* COCKPIT ASSEMBLY - Fuselage	1	32-40000 to 32-40565 inclusive
	69436-02	B	* COCKPIT ASSEMBLY - Fuselage	1	32-40566 to 32-40850 inclusive
	69436-04	B	* COCKPIT ASSEMBLY - Fuselage	1	32-40851 to 32-41018 inclusive
	69436-06	B	* COCKPIT ASSEMBLY - Fuselage	1	32-7140001 to 32-7140086 incl
	69436-08	B	* COCKPIT ASSEMBLY - Fuselage	1	32-7240001 to 32-7240147 incl
	69102-00	A,D	* COCKPIT ASSEMBLY - Fuselage	1	32-1 to 32-1110 inclusive
	69437-00	A,D	* COCKPIT ASSEMBLY - Fuselage	1	32-1111 to 32-1250 inclusive
	69437-04	A,D	* COCKPIT ASSEMBLY - Fuselage	1	32-1251 to 32-1320 inclusive
	69437-06	A,D	* COCKPIT ASSEMBLY - Fuselage	1	32-7100001 to 32-7100038 incl
	69437-08	A,D	* COCKPIT ASSEMBLY - Fuselage	1	32-7200001 to 32-7200055 incl
	69437-10	A,D	* COCKPIT ASSEMBLY - Fuselage	1	32-7300001 to 32-7300076 incl
	69702-00	A,D	* COCKPIT ASSEMBLY - Fuselage	1	32-7400001 to 32-7400081 incl
	69702-06	A,D	* COCKPIT ASSEMBLY - Fuselage	1	32-7500001 to 32-7600001 incl
	69890-903	A	* COCKPIT ASSEMBLY - Fuselage	1	32-7600002 and up
	69102-02	B,D	* COCKPIT ASSEMBLY - Fuselage	1	32-40000 to 32-40565 inclusive
	69437-02	B,D	* COCKPIT ASSEMBLY - Fuselage	1	32-40566 to 32-40850 inclusive
	69437-05	B,C,D	* COCKPIT ASSEMBLY - Fuselage	1	32-40851 to 32-41018 inclusive
	69437-07	B,C,D	* COCKPIT ASSEMBLY - Fuselage	1	32-7140001 to 32-7140086 incl
	69437-09	B,C,D	* COCKPIT ASSEMBLY - Fuselage	1	32-7240001 to 32-7240147 incl
	69437-11	B,D	* COCKPIT ASSEMBLY - Fuselage	1	32-7340001 to 32-7340201 incl
	69702-02	B,D	* COCKPIT ASSEMBLY - Fuselage	1	32-7440001 to 32-7440182 incl
	69702-05	B	* COCKPIT ASSEMBLY - Fuselage	1	32-7640001 to 32-7640029 incl
	69890-913	B	* COCKPIT ASSEMBLY - Fuselage	1	32-7640030 to 32-7640222 incl
	69890-923	B	* COCKPIT ASSEMBLY - Fuselage	1	32-7940001 and up
	69437-03	C	* COCKPIT ASSEMBLY - Fuselage	1	32S-40000 to 32S-40850 inclusive
	38001-903	E	* COCKPIT ASSEMBLY - Fuselage	1	32R-7680001 to 32R-7680538 incl
	38001-923	E	* COCKPIT ASSEMBLY - Fuselage	1	32R-7780001 and up
-4	68210-00	A	* * COCKPIT ASSEMBLY - Fuselage, upper	1	32-1 to 32-450 inclusive
	68210-02	A	* * COCKPIT ASSEMBLY - Fuselage, upper	1	32-451 to 32-1110 inclusive
	68210-04	A	* * COCKPIT ASSEMBLY - Fuselage, upper	1	32-1111 to 32-1250 inclusive
	68210-06	A	* * COCKPIT ASSEMBLY - Fuselage, upper	1	32-1251 to 32-1320 inclusive
	68210-08	A	* * COCKPIT ASSEMBLY - Fuselage, upper	1	32-7100001 to 32-7100038 incl
	68210-10	A	* * COCKPIT ASSEMBLY - Fuselage, upper	1	32-7200001 to 32-7200055 incl
	68210-03	B	* * COCKPIT ASSEMBLY - Fuselage, upper	1	32-40000 to 32-40565 inclusive
	68210-05	B	* COCKPIT ASSEMBLY - Fuselage, upper	1	32-40566 to 32-40850 inclusive
	68210-07	B	* * COCKPIT ASSEMBLY - Fuselage, upper	1	32-40851 to 32-41018 inclusive
	68210-09	B	* * COCKPIT ASSEMBLY - Fuselage, upper	1	32-7140001 to 32-7140086 incl
	68210-11	B	* * COCKPIT ASSEMBLY - Fuselage, upper	1	32-7240001 to 32-7240147 incl
	69103-00	A,D	* * COCKPIT ASSEMBLY - Fuselage, upper	1	32-1 to 32-1110 inclusive
	69103-03	A,D	* * COCKPIT ASSEMBLY - Fuselage, upper	1	32-1111 to 32-1250 inclusive
	69103-05	A,D	* * COCKPIT ASSEMBLY - Fuselage, upper	1	32-1251 to 32-1320 inclusive
	69103-07	A,D	* * COCKPIT ASSEMBLY - Fuselage, upper	1	32-7100001 to 32-7100038 incl
	69103-09	A,D	* * COCKPIT ASSEMBLY - Fuselage, upper	1	32-7200001 to 32-7200055 incl
	69103-11	A,D	* * COCKPIT ASSEMBLY - Fuselage, upper	1	32-7300001 to 32-7300076 incl
	69103-13	A,D	* * COCKPIT ASSEMBLY - Fuselage, upper	1	32-7400001 to 32-7400081 incl
	69103-16	A,D	* * COCKPIT ASSEMBLY - Fuselage, upper	1	32-7500001 to 32-7600001 incl
	69103-02	B,D	* * COCKPIT ASSEMBLY - Fuselage, upper	1	32-40000 to 32-40565 inclusive
	69103-04	B,D	* * COCKPIT ASSEMBLY - Fuselage, upper	1	32-40566 to 32-40850 inclusive
	69103-06	B,D	* * COCKPIT ASSEMBLY - Fuselage, upper	1	32-40851 to 32-41018 inclusive
	69103-08	B,D	* * COCKPIT ASSEMBLY - Fuselage, upper	1	32-7140001 to 32-7140086 incl
	69103-10	B,D	* * COCKPIT ASSEMBLY - Fuselage, upper	1	32-7240001 to 32-7240147 incl
	69103-12	B,D	* * COCKPIT ASSEMBLY - Fuselage, upper	1	32-7340001 to 32-7340201 incl

PIPER PARTS CATALOG

Figure and Index Number	Part Number	Code	NOMENCLATURE	No. Req.	SERIAL NUMBERS AFFECTED
8-4	69103-14	B,D	* * COCKPIT ASSEMBLY - Fuselage, upper	1	32-7440001 to 32-7440182 incl
	69103-17	B,D	* * COCKPIT ASSEMBLY - Fuselage, upper	1	32-7540001 to 32-7640029 incl
	69890-908	BA	* * COCKPIT ASSEMBLY - Fuselage, upper	1	
	88890-918	B	* * COCKPIT ASSEMBLY - Fuselage, upper	1	32-7940001 and up
	38001-908	E	* * COCKPIT ASSEMBLY - Fuselage, upper	1	
-5	66211-00	A,L	* * * UPPER COCKPIT ASSEMBLY - Forward	1	32-1 to 32-450 inclusive
	66211-08	A,L	* * * UPPER COCKPIT ASSEMBLY - Forward	1	32-451 to 32-1110 inclusive
	66310-00	A,L	* * * UPPER COCKPIT ASSEMBLY - Forward	1	32-1111 to 32 1320 inclusive
	69310-05	A,L	* * * UPPER COCKPIT ASSEMBLY - Forward	1	32-7100001 to 32-7100039 incl
	69310-07	A,L	* * * UPPER COCKPIT ASSEMBLY - Forward	1	32-7200001 to 32-7200055 incl
	69310-10	A,L	* * * UPPER COCKPIT ASSEMBLY - Forward	1	32-7300001 to 32-7300076 incl
	69310-13	A,L	* * * UPPER COCKPIT ASSEMBLY - Forward	1	32-7400001 to 32-7400061 incl
	69310-22	A,L	* * * UPPER COCKPIT ASSEMBLY - Forward	1	32-7500001 to 32-7600001 incl
	66211-09	B,L	* * * UPPER COCKPIT ASSEMBLY - Forward	1	32-40000 to 32-40565 inclusive
	69310-04	B,L	* * * UPPER COCKPIT ASSEMBLY - Forward	1	32-40566 to 32-41018 inclusive
	69310-06	B,L	* * * UPPER COCKPIT ASSEMBLY - Forward	1	32-7140001 to 32-7140088 incl
	69310-08	B,L	* * * UPPER COCKPIT ASSEMBLY - Forward	1	32-7240001 to 32-7240147 incl
	69310-11	B,L	* * * UPPER COCKPIT ASSEMBLY - Forward	1	32-7340001 to 32-7340201 incl
	69310-14	B,L	* * * UPPER COCKPIT ASSEMBLY - Forward	1	32-7440001 to 32-7440182 incl
	69310-21	B,L	* * * UPPER COCKPIT ASSEMBLY - Forward	1	32-7640001 to 32-7640029 incl
	69690-909	L,BA	* * * UPPER COCKPIT ASSEMBLY - Forward	1	
	69690-919	B,L	* * * UPPER COCKPIT ASSEMBLY - Forward	1	32-7940001 and up
	38001-909	E,M	* * * UPPER COCKPIT ASSEMBLY - Forward	1	
-6	69908-00	AS	* * * * SKIN - Top front	1	
	69908-900	BB	* * * * SKIN - Top front	1	
	69908-901	AU	* * * * SKIN - Top front	1	
-7	66211-06	N	* * * * SKIN - Top left	1	
	69310-02	O	* * * * SKIN - Top left	1	
	69310-12	Q	* * * * SKIN - Top left	1	
	69895-02	AS	* * * * SKIN - Top left	1	
	69895-900	AV	* * * * SKIN - Top left	1	
	66211-06	N	* * * * SKIN - Top right	1	
	69310-03	O	* * * * SKIN - Top right	1	
	69310-09	Q	* * * * SKIN - Top right	1	
	69895-03	AS	* * * * SKIN - Top right	1	
	69895-901	AV	* * * * SKIN - Top right	1	
-8	66211-04	AW	* * * * SKIN - Right side	1	
	79563-902	AX	* * * * SKIN - Right side	1	
-9	63596-00	N	* * * * COVER - Upper cockpit	1	
-10	66211-02	AS	* * * * SKIN - Left front	1	
	78663-907	AT	* * * * SKIN - Left front	1	
	38229-900	E	* * * * SKIN - Left front	1	
-11	38046-00	E	* * * * DOUBLER - Access cover	1	
-12	66288-00	N	* * * PANEL - Center skin	1	
	66309-00	S	* * * PANEL - Center skin	1	
	69309-02	T	* * * PANEL ASSEMBLY - Center skin	1	
	78110-02	P	* * * PANEL ASSEMBLY - Center skin	1	
	78110-00	AQ	* * * PANEL - Center skin	1	
-13	453 741	AZ	* * * BUMPER - (1152) Baggage door	1	
	37939-03	R,U	* * * BUMPER - Baggage door	1	
-14	66311-00	X,Y	* * * UPPER COCKPIT ASSEMBLY - Center	1	
	66311-06	X,Z	* * * UPPER COCKPIT ASSEMBLY - Center	1	
	66311-07	V,X	* * * UPPER COCKPIT ASSEMBLY - Center	1	
	69702-00	X,AY	* * * UPPER COCKPIT ASSEMBLY - Center	1	
	69690-910	X,AT	* * * UPPER COCKPIT ASSEMBLY - Center	1	
	38001-910	E,X	* * * UPPER COCKPIT ASSEMBLY - Center	1	
15	66311-05	AS	* * * * SKIN - Top front	1	
	69699-900	AV	* * * * SKIN - Top front	1	

PIPER PARTS CATALOG

Figure and Index Number	Part Number	Code	NOMENCLATURE	No. Req.	SERIAL NUMBERS AFFECTED
8-18	68318-00	J	* * * * SKIN - Left side, window trim	1	
	69691-00	E,H	* * * * SKIN - Left side, window trim	1	
	62481-00	J	* * * * SKIN - Right side, window trim	1	
	69694-00	E,H	* * * * SKIN - Right side, window trim	1	
-17	62493-00	AW	* * * * PAN - Upper cockpit	1	
	79547-02	AX	* * * * PAN - Upper cockpit	1	
-18	68329-00	J	* * * SKIN - Left side, window trim	1	
	69692-00	E,H	* * * SKIN - Left side, window trim	1	
	68348-00	J	* * * SKIN - Right side, window trim	1	
	69696-00	E,H	* * * SKIN - Right side, window trim	1	
-19	62420-22	J	* * * SKIN - Left side, window trim	1	
	76255-00	E,H	* * * SKIN - Left side, window trim	1	
	62420-11	AW	* * * SKIN - Right side, window trim	1	
	79561-03	AX	* * * SKIN - Right side, window trim	1	
-20	761 077	W,AN	* * * KIT - Cabin assist handle replacement	1	
	481 772	W,AM	* * * HANDLE - (N8167)	1	
-21	69902-00	AS	* * * SKIN - Top	1	
	69902-900	AV	* * * SKIN - Top	1	
-22	68355-00	AB,AD	* * * UPPER COCKPIT ASSEMBLY - Aft	1	
	68355-07	AA,AB	* * * UPPER COCKPIT ASSEMBLY - Aft	1	
	68355-08	AB,AC	* * * UPPER COCKPIT ASSEMBLY - Aft	1	
	69104-00	D,AB,AD	* * * UPPER COCKPIT ASSEMBLY - Aft	1	
	69104-02	D,AA,AB	* * * UPPER COCKPIT ASSEMBLY - Aft	1	
	69104-03	V,AB	* * * UPPER COCKPIT ASSEMBLY - Aft	1	
	69104-05	AB,AY	* * * UPPER COCKPIT ASSEMBLY - Aft	1	
	69890-911	AB,AT	* * * UPPER COCKPIT ASSEMBLY - Aft	1	
	36001-911	E,AB	* * * UPPER COCKPIT ASSEMBLY - Aft	1	
-23	69903-00	AS	* * * * SKIN - Top	1	
	69903-900	AV	* * * * SKIN - Top	1	
-24	68500-00	A	* * COCKPIT ASSEMBLY - Fuselage, lower	1	32-1 to 32-375 inclusive
	68500-02	A	* * COCKPIT ASSEMBLY - Fuselage, lower	1	32-376 to 32-7100038 incl
	68500-06	A	* * COCKPIT ASSEMBLY - Fuselage, lower	1	32-7200001 to 32-7200055 incl
	68500-03	B	* * COCKPIT ASSEMBLY - Fuselage, lower	1	32-40000 to 32-7140086 incl
	68500-07	B	* * COCKPIT ASSEMBLY - Fuselage, lower	1	32-7240001 to 32-7240147 incl
	68500-04	A,D	* * COCKPIT ASSEMBLY - Fuselage, lower	1	32-1 to 32-7100038 inclusive
	68500-08	A,D	* * COCKPIT ASSEMBLY - Fuselage, lower	1	32-7200001 to 32-7300076 incl
	68500-10	A,D	* * COCKPIT ASSEMBLY - Fuselage, lower	1	32-7400001 to 32-7600001 incl
	69890-906	A	* * COCKPIT ASSEMBLY - Fuselage, lower	1	32-7600002 and up
	68500-05	B,D	* * COCKPIT ASSEMBLY - Fuselage, lower	1	32-40000 to 32-7140086 incl
	68500-09	B,D	* * COCKPIT ASSEMBLY - Fuselage, lower	1	32-7240001 to 32-7340201 incl
	68500-11	B,D	* * COCKPIT ASSEMBLY - Fuselage, lower	1	32-7440001 to 32-7640029 incl
	69890-916	B	* * COCKPIT ASSEMBLY - Fuselage, lower	1	32-7640030 to 32-7840222 incl
	69890-925	B	* * COCKPIT ASSEMBLY - Fuselage, lower	1	32-7840001 and up
	36001-905	E	* * COCKPIT ASSEMBLY - Fuselage, lower	1	
-25	68501-00	A,AH	* * * LOWER COCKPIT ASSEMBLY - Forward	1	32-1 to 32-375 inclusive
	68850-00	A,AH	* * * LOWER COCKPIT ASSEMBLY - Forward	1	32-376 to 32-7100038 inclusive
	68950-03	A,AH	* * * LOWER COCKPIT ASSEMBLY - Forward	1	32-7200001 to 32-7300076 incl
	68950-04	A,AH	* * * LOWER COCKPIT ASSEMBLY - Forward	1	32-7400001 to 32-7600001 incl
	69890-908	AH	* * * LOWER COCKPIT ASSEMBLY - Forward	1	
	69029-00	B,AH	* * * LOWER COCKPIT ASSEMBLY - Forward	1	32-40000 to 32-7140086 incl
	69029-03	B,AH	* * * LOWER COCKPIT ASSEMBLY - Forward	1	32-7240001 to 32-7340201 incl
	69029-04	B,AH	* * * LOWER COCKIT ASSEMBLY - Forward	1	32-7440001 to 32-7640029 incl
	69890-916	B,AH	* * * LOWER COCKPIT ASSEMBLY - Forward	1	32-7640030 to 32-7840222 incl
	69890-926	B,AH	* * * LOWER COCKPIT ASSEMBLY - Forward	1	32-7940001 and up
	36001-906	E,AH	* * * LOWER COCKPIT ASSEMBLY - Forward	1	
-26	68906-00	AS	* * * * SKIN - Bottom	1	
	68906-900	AT	* * * * SKIN - Bottom	1	
	36228-900	E	* * * * SKIN - Bottom	1	

PIPER PARTS CATALOG

Figure and Index Number	Part Number	Code	NOMENCLATURE	No. Req.	SERIAL NUMBERS AFFECTED
8 27	68601-03	AS	* * * * SKIN - Bottom	1	
	69905-900	AV	* * * * SKIN - Bottom	1	
-28	68601-04	A	* * * * SKIN - Bottom	1	32-1 to 32-375 inclusive
	69896-00	AK	* * * * SKIN - Bottom	1	
	69896-900	A	* * * * SKIN - Bottom	1	32-7600002 and up
	69896-902	B	* * * * SKIN - Bottom	1	32-7640030 to 32-7840222 incl
	38416-02	B	* * * * SKIN - Bottom	1	32-7940001 and up
	38227-900	E	* * * * SKIN - Bottom	1	
29	65077-00	A	* * * * COVER ASSEMBLY - Access door	1	32-1 to 32-375 inclusive
	65523-00	A	* * * * COVER ASSEMBLY - Access door	1	32-376 and up
-30	22482-00	A,W	* * * * * SCOOP - Cover assembly	1	32-1 to 32-375 inclusive
-31	65072-00		* * * * COVER ASSEMBLY - Access door	1	
-32	68601-00	AE,AF	* * * LOWER COCKPIT ASSEMBLY - Aft	1	
	68601-09	AF,AJ	* * * LOWER COCKPIT ASSEMBLY - Aft	1	
	68601-05	D,AE,AF	* * * LOWER COCKPIT ASSEMBLY - Aft	1	
	68601-10	D,AE,AG	* * * LOWER COCKPIT ASSEMBLY - Aft	1	
	69690-907	D,AE,AT	* * * LOWER COCKPIT ASSEMBLY - Aft	1	
	38001-907	E,AE	* * * LOWER COCKPIT ASSEMBLY - Aft	1	32R-7680001 to 32R-7680538 incl
	38001-927	E,AE	* * * LOWER COCKPIT ASSEMBLY - Aft	1	32R-7780001 and up
-33	69898-00	AS	* * * * SKIN - Bottom	1	
	69898-900	AV	* * * * SKIN - Bottom	1	
-34	69897-00	AS	* * * * SKIN - Bottom	1	
	69897-900	AV	* * * * SKIN - Bottom	1	
-35	68602-00		* * * * SKIN - Bottom, left	1	
	68602-01		* * * * SKIN - Bottom, right	1	
-36	76474-03	AS	* * SKIN - Left side	1	
	76474-903	AV	* * SKIN - Left side	1	
-37	69907-00	AS	* * SKIN - Left side	1	
	69907-900	AV	* * SKIN - Left side	1	
	69907-01	AS	* * SKIN - Right side	1	
	69907-901	AV	* * SKIN - Right side	1	
-38	69911-00	AS	* * SKIN - Right side	1	
	69911-900	A,V	* * SKIN - Right side	1	
-39	68355-04	A,B	* SKIN - Left side	1	
	68812-00	AS	* SKIN - Right side	1	
	69912-900	AV	* SKIN - Right side	1	
-40	69904-00	AS	* SKIN - Top	1	
	69904-900	AV	* SKIN - Top	1	
-41	68377-00	A	* SKIN - Right side	1	
	69696-00	AL	* SKIN - Right side	1	
-42	38046-02	E	* COVER - Access	1	
-43	487 674	D	* STUD - (XX16282) Cargo door strap	1	
-44	453 741	D,AZ	* BUMPER - (1152) Cargo door	1	
	37939-03	U	* BUMPER - Cargo door	1	
-45	487 574		* STUD - (XX16362)	2	
46	69014-00		STEP ASSEMBLY	1	
-47	79427-02		COVER - ADF antenna closeout	1	
-48	69881-02	AO	GUTTER - Cargo door	1	
-49	69881-03	AO	GUTTER - Cabin door	1	

When ordering, always specify Part Number, Description and Serial Number of Aircraft

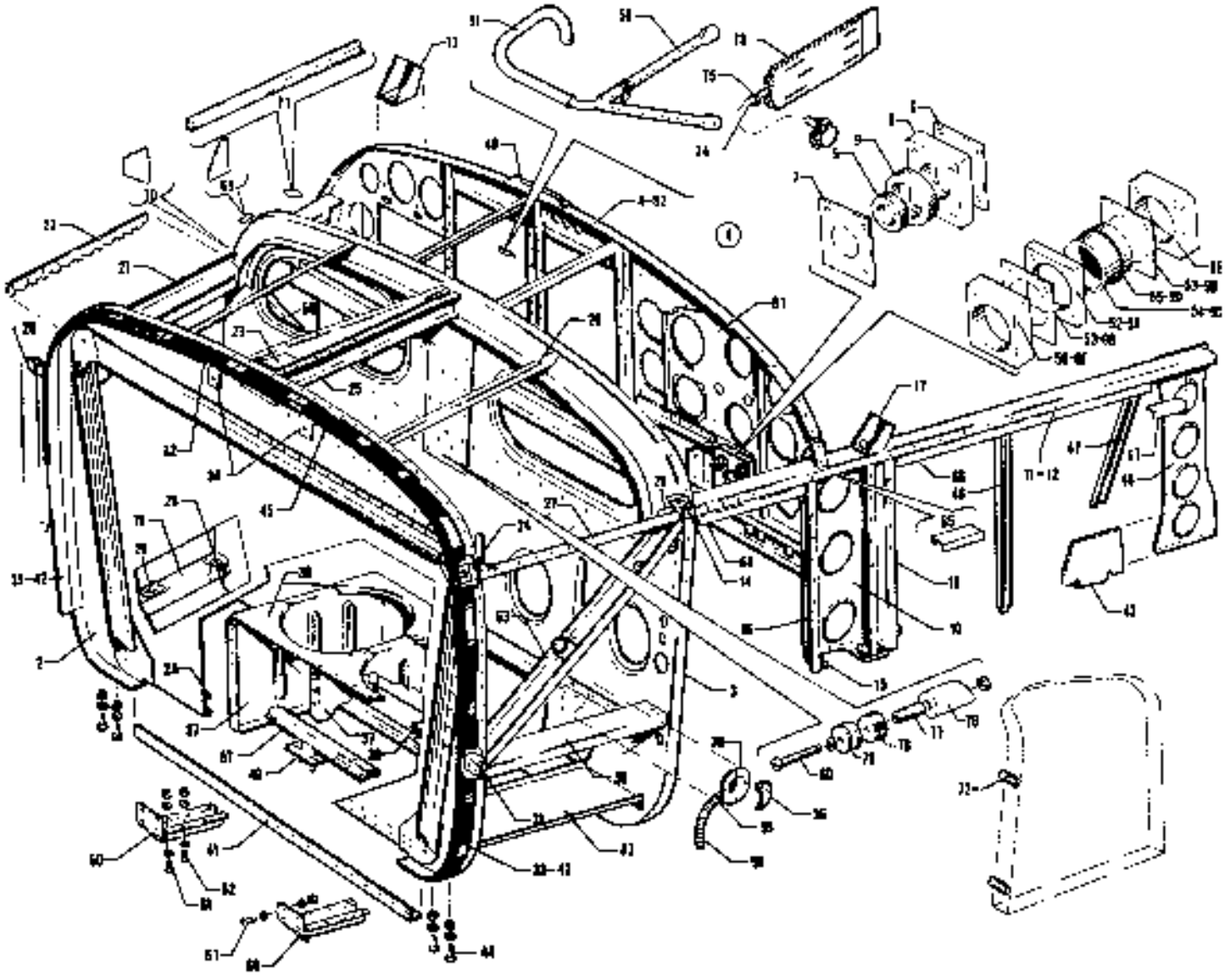

Figure 8 Upper Cockpit Assembly - Forward

CODE EXPLANATIONS FOR FIGURE 9

A - Used on PA-32-260 only
B - Used on PA-32-300 only
C - Used on PA-32-260 with serial numbers 32-1111 to 32-1320 incl., and PA-32-300 with serial numbers 32-40566 to 32-41018 incl
D - Used on PA-32-260 with serial numbers 32-7100001 to 32-7100038 incl., and PA-32-300 with serial numbers 32-7140001 to 32-7140086 incl
E - Used on PA-32-260 with serial numbers 32-7200001 to 32-7200055 incl., and PA-32-300 with serial numbers 32-7240001 to 32-7240147 incl
F - Used on PA-32-260 with serial numbers 32-7300001 to 32-7300076 incl., and PA-32-300 with serial numbers 32-7340001 to 32-7340201 incl
G - Used on PA-32-260 with serial numbers 32-7400001 to 32-7400061 incl., and PA-32-300 with serial numbers 32-7440001 to 32-7440182 incl
H - Used on PA-32-260 with serial numbers 32-1111 and up, and PA-32-300 with serial numbers 32-40566 and up
J - Used on PA-32-260 with serial numbers 32-1251 to 32-7200055 incl., and PA-32-300 with serial numbers 32-40861 to 32-7240147 incl
K - Used on PA-32-260 with serial numbers 32-7500001 and up, and PA-32-300 with serial numbers 32-7540001 and up
L - Used on PA-32-260 with serial numbers 32-1 to 32-1110 incl., and PA-32-300 with serial numbers 32-40000 to 32-40565 incl
M - If existing door lock incorporates a notched cam, order striker plate, Part No. 88463-00 only
N - If door incorporates Trigger-Action Latch H38-120-750, identifiable by the rectangular push button, order part for serial numbers 32-1111 and up on PA-32-260 or 32-40566 and up on PA-32-300
O - Used on PA-32-260 with serial numbers 32-7200001 and up, and PA-32-300 with serial numbers 32-7240001 and up
P - Used on PA-32-260 with serial numbers 32-1 to 32-7100038 incl., and PA-32-300 with serial numbers 32-40000 to 32-7140086 incl
Q - Used on PA-32-260 with serial numbers 32-7100001 and up, and PA-32-300 with serial numbers 32-7140001 and up
R - Used on PA-32-260 with serial numbers 32-1 to 32-7300076 incl., and PA-32-300 with serial numbers 32-40000 to 32-7340201 incl
S - Used on PA-32-260 with serial numbers 32-7400001 and up, and PA-32-300 with serial numbers 32-7440001 and up
T - Used on PA-32S-300 Seaplane Model only
U - Used on PA-32-260 with serial numbers 32-61 to 32-1110 incl., and PA-32-300 with serial numbers 32-40000 to 32-40565 incl
V - Used on PA-32-260 with serial numbers 32-451 to 32-1110 incl., and PA-32-300 with serial numbers 32-40000 to 32-40565 incl
W - These parts must be ordered from Service Spares Department, Piper Aircraft, Lock Haven, Penna
X - Used on PA-32-260 with serial numbers 32-1111 to 32-7400061 incl., and PA-32-300 with serial numbers 32-40566 to 32-7540002 incl
Y - Used on PA-32-260 with serial numbers 32-7500001 and up, and PA-32-300 with serial numbers 32-7540003 and up
Z - Used on PA-32-260 with serial numbers 32-1 to 32-7600001 incl., and PA-32-300 with serial numbers 32-40000 to 32-7640029 incl
AA - Used on PA-32-260 with serial numbers 32-7600002 and up, and PA-32-300 with serial numbers 32-7640030 and up
AB - Used on PA-32-260 with serial numbers 32-7600001 and up, and PA-32-300 with serial numbers 32-7640001 and up
AC - Used if NSD-360 is installed
AD - Used on PA-32-260 with serial numbers 32-7600002 and up, and PA-32-300 with serial numbers 32-7640030 to 32-7640222 incl
AE - Used on PA-32-260 with serial numbers 32-1111 to 32-7400061 inclusive, and PA-32-300 with serial numbers 32-40566 to 32-7440182 inclusive

PIPER PARTS CATALOG

Figure and Index Number	Part Number	Code	NOMENCLATURE	No. Req.	SERIAL NUMBERS AFFECTED
9-1	68211-00	A	COCKPIT ASSEMBLY - Forward	1	32-1 to 32-450 inclusive
	68211-08	A	COCKPIT ASSEMBLY - Forward	1	32-451 to 32-1110 inclusive
	69310-00	A	COCKPIT ASSEMBLY - Forward	1	32-1111 to 32-1320 inclusive
	69310-05	A	COCKPIT ASSEMBLY - Forward	1	32-7100001 to 32-7100038 incl
	69310-07	A	COCKPIT ASSEMBLY - Forward	1	32-7200001 to 32-7200055 incl
	69310-10	A	COCKPIT ASSEMBLY - Forward	1	32-7300001 to 32-7300076 incl
	69310-13	A	COCKPIT ASSEMBLY - Forward	1	32-7400001 to 32-7400061 incl
	69310-22	A	COCKPIT ASSEMBLY - Forward	1	32-7600001 to 32-7600001 incl
	68211-09	B	COCKPIT ASSEMBLY - Forward	1	32-40000 to 32-40565 inclusive
	69310-04	B	COCKPIT ASSEMBLY - Forward	1	32-40566 to 32-41018 inclusive
	69310-06	B	COCKPIT ASSEMBLY - Forward	1	32-7140001 to 32-7140086 incl
	69310-08	B	COCKPIT ASSEMBLY - Forward	1	32-7240001 to 32-7240147 incl
	69310-11	B	COCKPIT ASSEMBLY - Forward	1	32-7340001 to 32-7340201 incl
	69310-14	B	COCKPIT ASSEMBLY - Forward	1	32-7440001 to 32-7440182 incl
	69310-21	B	COCKPIT ASSEMBLY - Forward	1	32-7640001 to 32-7640029 incl
	69880-909	AD	COCKPIT ASSEMBLY - Forward	1	
	69880-919	B	COCKPIT ASSEMBLY - Forward	1	32-7940001 and up
-2	68212-00	A	* FIREWALL ASSEMBLY	1	32-1 to 32-1110 inclusive
	69466-00	A	* FIREWALL ASSEMBLY	1	32-1111 to 32-7300076 inclusive
	69466-09	A	* FIREWALL ASSEMBLY	1	32-7400001 and up
	68212-02	B	* FIREWALL ASSEMBLY	1	32-40000 to 32-40565 inclusive
	69466-02	B	* FIREWALL ASSEMBLY	1	32-40566 to 32-7340201 incl
	69466-04	B	* FIREWALL ASSEMBLY	1	32-7440001 to 32-7640029 incl
	69466-03	B	* FIREWALL ASSEMBLY	1	32-7640030 to 32-7640222 incl
	69466-06	B	* FIREWALL ASSEMBLY	1	32-7940001 and up
	68388-58	D	* FIREWALL ASSEMBLY	1	32-40000 to 32-7240147 incl
-2a	68216-00		* * CHANNEL - Firewall	1	
-2b	68217-00		* * JAMB - Firewall	1	
-3	68230-00	L	* BULKHEAD ASSEMBLY - Sta 48.5	1	
	69467-00	A,E	* BULKHEAD ASSEMBLY - Sta 48.5	1	
	69467-02	G	* BULKHEAD ASSEMBLY - Sta 48.5	1	
	69467-03	K	* BULKHEAD ASSEMBLY - Sta 48.5	1	
-4	68240-00	A	* PANEL ASSEMBLY - Instrument	1	32-1 to 32-50 inclusive
	68240-02	A	* PANEL ASSEMBLY - Instrument	1	32-51 to 32-450 inclusive
	68387-00	A	* PANEL ASSEMBLY - Instrument	1	32-451 to 32-1110 inclusive
	68387-02	B	* PANEL ASSEMBLY - Instrument	1	32-40000 to 32-40565 inclusive
	69306-00	C	* PANEL ASSEMBLY - Instrument	1	
	69306-02	D	* PANEL ASSEMBLY - Instrument	1	
	69306-03	E	* PANEL ASSEMBLY - Instrument	1	
	69306-04	F	* PANEL ASSEMBLY - Instrument	1	
	69306-05	G	* PANEL ASSEMBLY - Instrument	1	
	69798-00	K	* PANEL ASSEMBLY - Instrument	1	
-5	62870-00		* * BUSHING - Control wheel	2	32-1 to 32-50 inclusive
-6	62521-15		* * WASHER - Felt, control wheel	2	32-1 to 32-50 inclusive
-7	62521-09		* * PLATE - Control wheel	2	32-1 to 32-50 inclusive
-8	62869-00		* * PLATE - Control wheel	2	32-1 to 32-50 inclusive
-9	62871-00		* * SPACER - Control wheel	2	32-1 to 32-50 inclusive
-9a	68272-02	H	* * PLATE - Control wheel	2	
-9b	68272-03	H	* * PLATE - Control wheel	4	
-9c	68273-02	H	* * BUSHING - Control wheel	2	
-9d	464 792	H	* * "O" RING - Control wheel (M528775-218)	2	
-9e	68831-00	J	* * PLATE - Control wheel lock	1	
-9f	68272-04	H	* * PLATE - Control wheel	2	
-10	68252-00		* WEB - Upper cockpit, left	1	
	68253-00		* WEB - Upper cockpit, right	1	
-11	68254-00		* LONGERON - Upper cockpit, left	1	
-12	68258-00	Z	* LONGERON - Upper cockpit, right	1	
	68258-05	AA	* LONGERON ASSEMBLY - Upper cockpit, right	1	
-13	68257-00	Z	* FITTING ASSEMBLY - Web assembly	1	
	79553-01	AA	* FITTING ASSEMBLY - Web assembly	1	

When ordering, always specify Part Number, Description and Serial Number of Aircraft

PIPER PARTS CATALOG

Figure and Index Number	Part Number	Code	NOMENCLATURE	No Req.	SERIAL NUMBERS AFFECTED
9-14	68255-00	P	* CLIP - Web assembly, left	1	
	96839-00	O	* CLIP - Web assembly, left	1	
	68255-01	P	* CLIP - Web assembly, right	1	
	96839-01	O	* CLIP - Web assembly, right	1	
-15	62514-00		* CLIP - Web assembly	2	
-16	62674-03		* ZEE - Web assembly, left	1	
	62674-01		* ZEE - Web assembly, right	1	
-17	62522-00	Z	* FITTING - Web assembly	1	
	79553-00	AA	* FITTING - Web assembly	1	
-18	62553-04		* FRAME ASSEMBLY - Upper cockpit	1	
-19	68260-00	L,N	* DOOR SILL ASSEMBLY - Forward baggage	1	
	69491-00	H	* DOOR SILL ASSEMBLY - Forward baggage	1	
-20	760 457	L,M,N	* * KIT - Baggage door lock and striker plate conversion	1	
	66794-00	H	* * STRIKER PLATE - Door sill	1	
-21	68266-00		* CHANNEL ASSEMBLY - Forward baggage	1	
-22	66266-02		* * HINGE HALF - Forward baggage	1	
-23	68277-00		* FITTING - Engine mount, center	1	
24	68282-00		* FITTING - Engine mount, left	1	
	68282-01		* FITTING - Engine mount, right	1	
-26	68276-00		* CHANNEL - Forward baggage, left	1	
	68276-01		* CHANNEL - Forward baggage, right	1	
-26	68278-00		* STIFFENER - Skin, top front	2	
-27	68281-00		* LONGERON - Forward, left	1	
	68281-01		* LONGERON - Forward, right	1	
-28	62506-00		* CLIP - Sill attachment, right	1	
-29	68283-00		* CLIP - Channel attachment, left	1	
	68283-01		* CLIP - Channel attachment, right	1	
-30	68285-00		* LONGERON - Forward, left	1	
-31	68286-00		* CLIP - Channel attachment, left	1	
-32	68290-04		* FLANGE - Nose cowl attaching, top	1	
33	68290-02		* FLANGE - Nose cowl attaching, left	1	
	68290-03		* FLANGE - Nose cowl attaching, right	1	
-34	68279-00		* PLATE ASSEMBLY - Joggle strip	2	
-35	53218-05		* BOX ASSEMBLY - Ventilator	1	
36	22482-00	W	* SCOOP - Air	1	
-37	68153-00	R	* WEB ASSEMBLY - Forward baggage, left	1	
	69844-00	S	* WEB ASSEMBLY - Forward baggage, left	1	
	68153-01	R	* WEB ASSEMBLY - Forward baggage, right	1	
	69844-01	S	* WEB ASSEMBLY - Forward baggage, right	1	
-38	68156-00		* GUSSET - Forward baggage, rear	1	
	68156-01		* GUSSET - Forward baggage, forward	1	
-39	68156-00		* GUSSET - Forward baggage, rear	1	
	68157-00		* GUSSET - Forward baggage, forward	1	
-40	68163-00		VENT ASSEMBLY - Battery	1	
-41	68203-00		ANGLE - Firewall	1	
-42	68290-06		FLANGE - Nose cowl attaching, left	1	
	68290-05		FLANGE - Nose cowl attaching, right	1	
-43	62542-00		GUSSET - Left	1	
	62542-01		GUSSET - Right	1	
-44	415 322		CLEVIS BOLT - (MS27039-1-12)	4	
	407 694		WASHER - (AN960-D10)	4	
	404 687	W	NUT - (MS20365-1032C)	4	
-45	65457-00		SEAL - Cowl, complete	1	32-1 to 32-145 inclusive
	65692-02		SEAL - Cowl, lower	2	32-146 and up
	65692-03		SEAL - Cowl, upper	1	32-146 and up
-46	68229-04	L	CHANNEL - Armrest support	1	
	62640-00	C	CHANNEL - Armrest support	1	
	99421-00	Q	CHANNEL - Armrest support	1	

When ordering, always specify Part Number, Description and Serial Number of Aircraft

PIPER PARTS CATALOG

Figure and Index Number	Part Number	Code	NOMENCLATURE	No. Req.	SERIAL NUMBERS AFFECTED
9-47	68274-00	L	CHANNEL - Armrest support	1	
	82640-00	C	CHANNEL - Armrest support	1	
	99421-00	Q	CHANNEL - Armrest support	1	
-48	82644-00		WEB - Forward cockpit, Sta 108	1	
-49	68289-00	L	CHANNEL - Handhold	1	
-50	66096-00	L	TUBE ASSEMBLY - Radio cooling	1	
	67469-00	X	TUBE ASSEMBLY - Radio cooling	1	
-51	13586-00	L,W	TUBE - Radio cooling	1	
	63633-62	X	TUBE - Radio cooling	1	
-52	68272-02	U	PLATE - Control wheel	2	
-53	68272-03	U	PLATE - Control wheel	4	
-54	68273-00		BUSHING Control wheel	2	32-51 to 32-450 incl
	68273-02	V	BUSHING - Control wheel	2	
-55	464 711	U,W	"O" RING - (AN6227-23) Control wheel	2	
56	68272-04	U	PLATE - Control wheel	2	
-57	68164-00		HAT ASSEMBLY - Forward baggage	2	
-58	63633-02		HOSE - Air box	1	
-59	464 997		CLAMP - (H1-1160)	1	
-60	69116-00	T	BRACKET ASSEMBLY - Float support	2	32S-40000 to 32S-7240147 incl
-61	400 860	T,W	BOLT - Clevis (AN23-8A)	12	32S-40000 to 32S-7240147 incl
	407 564	T,W	WASHER - (AN960-10)	12	32S-40000 to 32S-7240147 incl
	407 564	T,W	WASHER - (AN960-10L)	12	32S-40000 to 32S-7240147 incl
	404 887	T,W	NUT - (MS20365-1032C)	12	32S-40000 to 32S-7240147 incl
-62	400 869	T	BOLT - Clevis (AN23-9A)	12	32S-40000 to 32S-7240147 incl
	407 564	T,W	WASHER - (AN960-10)	12	32S-40000 to 32S-7240147 incl
	407 564	T,W	WASHER - (AN960-10L)	12	32S-40000 to 32S-7240147 incl
	404 887	T,W	NUT - (MS20365-1032C)	12	32S-40000 to 32S-7240147 incl
-63	69152-00	T	CHANNEL ASSEMBLY - Baggage compartment	1	32S-40000 to 32S-7240147 incl
-64	69139-00	T	ZEE - Forward upper cockpit	1	32S-40000 to 32S-7240147 incl
-65	67177-03	T	CHANNEL - Reinforcement	1	32S-40000 to 32S-7240147 incl
-66	69129-00	T	CHANNEL - Longeron	1	32S-40000 to 32S-7240147 incl
-67	67258-00	T	ANGLE - Reinforcement	1	32S-40000 to 32S-7240147 incl
68	69118-00	T	CHANNEL - Upper cockpit	1	32S-40000 to 32S-7240147 incl
-69	69132-00	T	GUSSET - Upper cockpit, lower	1	32S-40000 to 32S-7240147 incl
-70	69131-00	T	GUSSET - Upper cockpit, upper	1	32S-40000 to 32S-7240147 incl
-71	69137-00	T	STRINGER - Forward lower cockpit	1	32S-40000 to 32S-7240147 incl
-72	63900-46		BUSHING - Door jamb hinge	2	
-73	78406-00	Y	BOX ASSEMBLY - Radio cooling	1	
-74	63633-136	Y	HOSE - Radio cooling	1	
-75	554 888	Y,W	CLAMP - (SAE TY F-6)	2	
-76	63927-00		BUMPER - Tee bar	1	
-77	63900-64		BUSHING - Tee bar bumper	1	
-78	69699-00		SPACER - Tee bar bumper	1	
-79	62833-23		WASHER - Tee bar bumper	AR	
-80	411 539		BOLT - (MS35207-270)	1	
	407 564	W	WASHER - (AN960-10)	2	
	404 887	W	NUT - (MS20365-1032C)	1	
-81	79564-00	AB,AC	DOUBLER - Instrument panel	1	
-82	79565-00	AB,AC	PANEL - Instrument	1	
-83	68863-00		SHELF ASSEMBLY - Radio equipment	1	

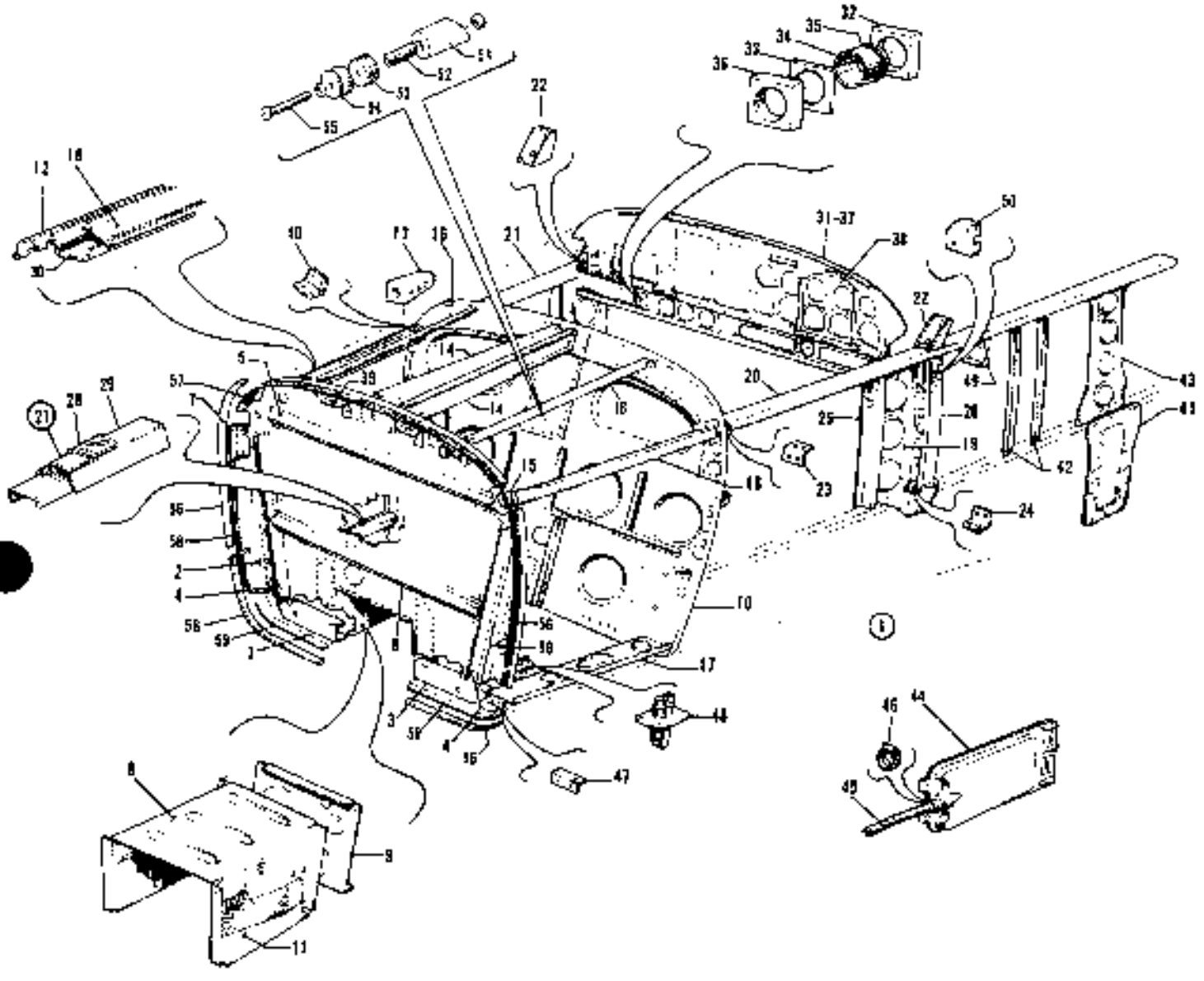

Figure 10 Upper Cockpit Assembly - Forward

CODE EXPLANATIONS FOR FIGURE 10

A - Used if switch panel is unlighted
B - Used if switch panel is lighted
C - Used if NSD-360 is installed
W - These parts must be ordered from Service Spares Department, Piper Aircraft, Lock Haven, Penna.

PIPER PARTS CATALOG

Figure and Index Number	Part Number	Code	NOMENCLATURE	No Req	SERIAL NUMBERS AFFECTED
10-1	38001-909		UPPER COCKPIT ASSEMBLY - Forward	1	
-2	38035-00		* FIREWALL ASSEMBLY - Upper cockpit	1	
-3	38035-03		* * CHANNEL - Firewall, left	1	
	38035-04		* * CHANNEL - Firewall, right	1	
-4	68214-02		* * CHANNEL - Hat, firewall, left	1	
	68214-03		* * CHANNEL - Hat, firewall, right	1	
-5	68215-00		* * CHANNEL - Hat, firewall, upper	1	
6	38035-02		* * CHANNEL - Hat, firewall, center	1	
-7	68217-00		* * JAMB - Firewall	1	
-8	38037-04		* COVER - Wheel well	1	
-9	38037-00		* COVER - Wheel well	1	
-10	38034-00		* BULKHEAD ASSEMBLY - Sta 48.6	1	
11	38037-05		* WEB ASSEMBLY - Wheel well, left	1	
	38037-06		* WEB ASSEMBLY - Wheel well, right	1	
-12	68268-02		* HINGE HALF - Forward baggage	1	
-13	68277-00		* FITTING - Engine mount, center	1	
-14	68276-00		* CHANNEL - Forward baggage, left	1	
	68276-01		* CHANNEL - Forward baggage, right	1	
-15	68282-00		* FITTING - Engine mount, left	1	
	68282-01		* FITTING - Engine mount, right	1	
16	68278-00		* STIFFENER - Skin, top front	2	
-17	38044-00		* LONGERON - Lower	1	
-18	68281-00		* LONGERON - Forward, left	1	
	68281-01		* LONGERON - Forward, right	1	
-19	68252-00		* WEB - Upper cockpit, left	1	
	68253-00		* WEB - Upper cockpit, right	1	
-20	68254-00		* LONGERON - Upper cockpit, left	1	
-21	68258-00		* LONGERON ASSEMBLY - Upper cockpit, right	1	32R-7680001 to 32R-7680013 incl
	68258-05		* LONGERON ASSEMBLY - Upper cockpit, right	1	32R-7680014 and up
-22	62522-00		* FITTING - Web assembly, left	1	32R-7680001 to 32R-7680013 incl
	79563-00		* FITTING - Web assembly, left	1	32R-7680014 and up
	68257-00		* FITTING - Web assembly, right	1	32R-7680001 to 32R-7680013 incl
	79563-01		* FITTING - Web assembly, right	1	32R-7680014 and up
-23	68255-00		* CLIP - Web assembly, left	1	
	96839-01		* CLIP - Web assembly, right	1	
24	62514-00		* CLIP - Web assembly	2	
-25	62674-03		* ZEE - Web assembly, left	1	
	62674-01		* ZEE - Web assembly, right	1	
26	62663-04		* FRAME ASSEMBLY - Upper cockpit, left	1	
-27	69491-00		* DOOR SILL ASSEMBLY - Forward baggage	1	
-28	66794-00		* * STRIKER PLATE - Door sill	1	
-29	69492-00		* * JAMB - Forward baggage	1	
-30	69267-00		* JAMB - Baggage door	1	
-31	69798-00		* PANEL ASSEMBLY - Instrument	1	
-32	68272-02		* * PLATE - Control wheel	2	
-33	68272-03		* * PLATE - Control wheel	4	
-34	68273-02		* * BUSHING - Control wheel	2	
35	494 792		* * "O" RING - Control wheel (MS28775-218)	2	
-36	68272-04		* * PLATE - Control wheel	2	
-37	79565-00	C	PANEL - Instrument	1	

When ordering, always specify Part Number, Description and Serial Number of Aircraft

PIPER PARTS CATALOG

Figure and Index Number	Part Number	Code	NOMENCLATURE	No. Req.	SERIAL NUMBERS AFFECTED
10-38	79564-00	C	DOUBLER - Instrument panel	1	
-39	68279-00		PLATE ASSEMBLY - Joggle strip, left	1	
	68279-04		PLATE ASSEMBLY - Joggle strip, right	1	
-40	68283-00		CLIP - Channel attachment, left	1	
	68283-01		CLIP - Channel attachment, right	1	
-41	62642-00		GUSSET - Left	1	
	62642-01		GUSSET - Right	1	
-42	99421-00		CHANNEL - Armrest support	2	
-43	62644-00		WEB - Forward cockpit, Sta 108	1	
-44	79405-00		BOX ASSEMBLY - Radio cooling	1	
-45	63633-136		HOSE - Radio cooling	1	
-46	554 668	W	CLAMP - (SAE TY F-6)	2	
-47	68286-00		CLIP - Attachment	1	
-48	83909-00		VENT ASSEMBLY - Battery	1	
-49	69347-00	A	MOUNT ASSEMBLY - Switch plate	1	
	69347-03	B	MOUNT ASSEMBLY - Switch plate	1	32R-7885002 and up
-50	69475-00		MOUNT ASSEMBLY - Switch plate	1	
-51	83927-00		BUMPER - Tee bar	1	
-52	63900-64		BUSHING - Tee bar bumper	1	
-53	68699-00		SPACER - Tee bar bumper	1	
-54	62833-23		WASHER - Tee bar bumper	AR	
-55	411 539		BOLT - (MS35207-270)	1	
	407 564	W	WASHER - (AN960-10)	1	
	404 887	W	NUT - (MS20365-1032C)	1	
-56	65692-02		SEAL - Cowl, lower	2	
	65692-03		SEAL - Cowl, upper	1	
-57	68290-04		FLANGE - Engine cowl, top	1	
-58	68290-02		FLANGE - Engine cowl, left	1	
	68290-03		FLANGE - Engine cowl, right	1	
-59	68290-06		FLANGE - Engine cowl, left	1	
	68290-05		FLANGE - Engine cowl, right	1	

When ordering, always specify Part Number, Description and Serial Number of Aircraft

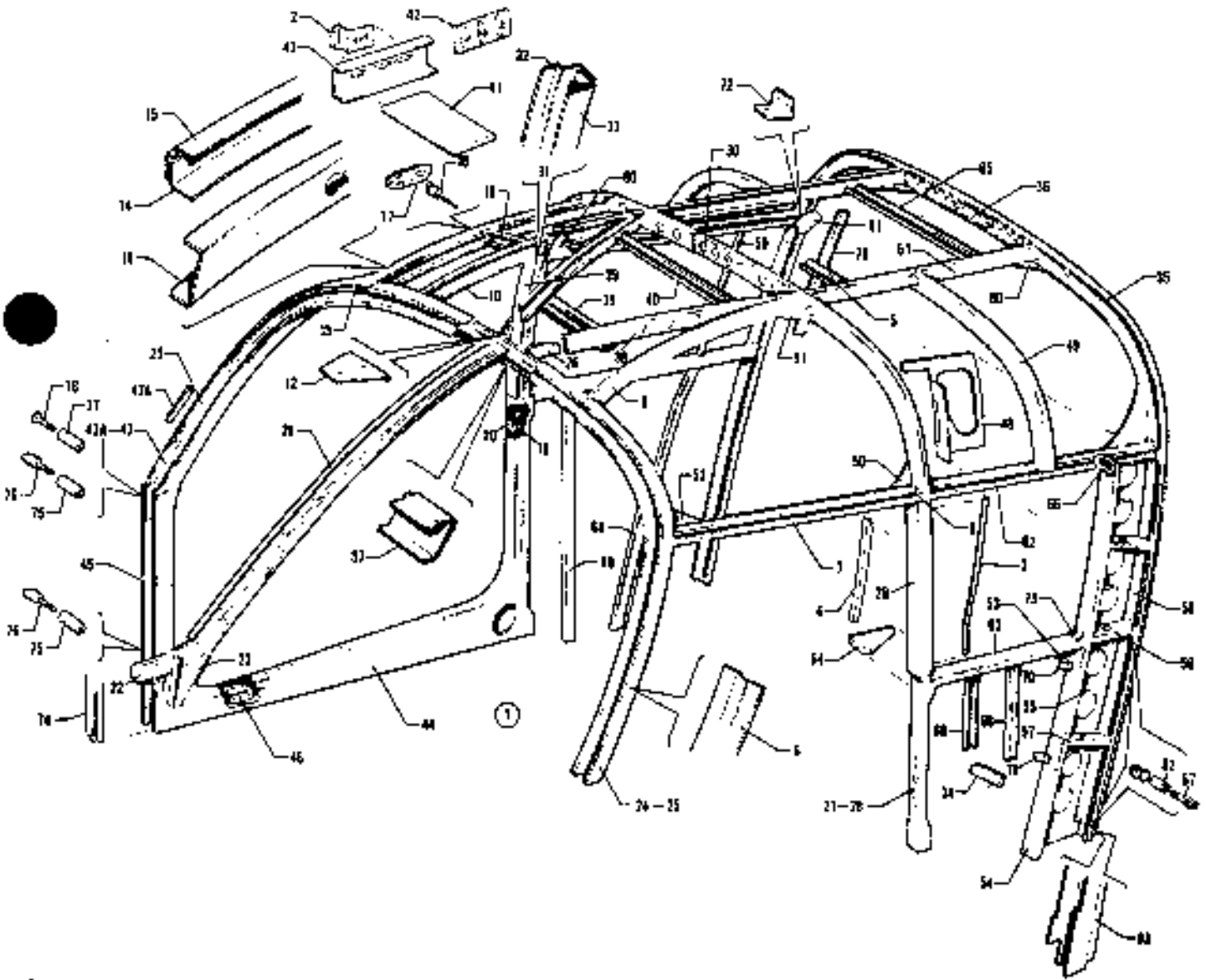

Figure 11 Upper Cockpit Assembly - Center

CODE EXPLANATIONS FOR FIGURE 11

A - Used if Cargo Door is installed on PA-32-260 and PA-32-300 only.
B - Used if .250 thick sound reduction windshield is installed.
C - Used on PA-32-260 with serial numbers 32-1 to 32-7400043 incl., and PA-32-300 with serial numbers 32-40000 to 32-7440126 incl.
D - Used on PA-32-260 with serial numbers 32-1 to 32-1250 incl., and PA-32-300 with serial numbers 32-40000 to 32-40860 incl.
E - Used on PA-32-260 with serial numbers 32-1251 to 32-7100038 incl., and PA-32-300 with serial numbers 32-40861 to 32-7140086 incl.
F - Used on PA-32-260 with serial numbers 32-7400044 to 32-7600001 incl., PA-32-300 with serial numbers 32-7440127 to 32-7640029 incl., and PA-32R-300 with serial numbers 32R-7680001 to 32R-7680013 incl.
G - Used on PA-32-260 with serial numbers 32-1 to 32-7200055 incl., and PA-32-300 with serial numbers 32-40000 to 32-7240147 incl.
H - Used on PA-32-260 with serial numbers 32-7400001 to 32-7400043 incl., and PA-32-300 with serial numbers 32-7440001 to 32-7440126 incl.
J - Used on PA-32-260 with serial numbers 32-7200001 to 32-7300076 incl., and PA-32-300 with serial numbers 32-7240001 to 32-7340201 incl.
K - Used on PA-32-260 with serial numbers 32-7400001 and up, and PA-32-300 with serial numbers 32-7440001 and up.
L - Used on PA-32R-300 only.
M - Used on PA-32-260 with serial numbers 32-7200001 and up, PA-32-300 with serial numbers 32-7240001 and up, and PA-32R-300.
N - Used on PA-32-260 with serial numbers 32-7300037 to 32-7600001 incl., PA-32-300 with serial numbers 32-7340112 to 32-7640029 incl., and PA-32R-300 with serial numbers 32R-7680001 to 32R-7680013 incl.
O - Used on PA-32-260 with serial numbers 32-1111 and up, PA-32-300 with serial numbers 32-40566 and up, and PA-32R-300.
P - Used on PA-32-260 with serial numbers 32-1 to 32-1110 incl., and PA-32-300 with serial numbers 32-40000 to 32-40565 incl.
Q - Used on PA-32-260 with serial numbers 32-1 to 32-7300036 incl., and PA-32-300 with serial numbers 32-40000 to 32-7340111 incl.
R - Used on PA-32-260 with serial numbers 32-7200001 to 32-7200021 incl., and PA-32-300 with serial numbers 32-7240001 to 32-7240077 incl., and 32-7240079 to 32-7240081 incl.
S - Used on PA-32-260 with serial numbers 32-7200022 and up, and PA-32-300 with serial numbers 32-7240078 and 32-7240082 and up, and PA-32R-300.
T - Used on PA-32-260 with serial numbers 32-1 to 32-7100038 incl., and PA-32-300 with serial numbers 32-40000 to 32-7140086 incl.
U - Used on PA-32-260 with serial numbers 32-1 to 32-7200021 incl., and PA-32-300 with serial numbers 32-40000 to 32-7240077 incl., and 32-7240079 to 32-7240081 incl.
V - Used on PA-32-260 with serial numbers 32-1251 to 32-7300076 incl., and PA-32-300 with serial numbers 32-40861 to 32-7340201 incl.
W - These parts must be ordered from Service Spare Department, Piper Aircraft, Lock Haven, Penna.
X - Used on PA-32-260 with serial numbers 32-7400001 to 32-7600001 incl., PA-32-300 with serial numbers 32-7440001 to 32-7640029 incl., and PA-32R-300 with serial numbers 32R-7680001 to 32R-7680013 incl.
Y - Used on PA-32-260 with serial numbers 32-1 to 32-7300076 incl., and PA-32-300 with serial numbers 32-40000 to 32-7340201 incl.
Z - Used on PA-32-260 and PA-32-300 only.
AA - Used on PA-32-260 with serial numbers 32-7300037 and up, PA-32-300 with serial numbers 32-7340112 and up, and PA-32R-300.
AB - Used on PA-32-260 with serial numbers 32-1111 to 32-1320 incl., and PA-32-300 with serial numbers 32-40566 to 32-41018 incl.
AC - Used on PA-32-260 with serial numbers 32-7100001 and up, and PA-32-300 with serial numbers 32-7140001 and up.
AD - Used on PA-32-260 with serial numbers 32-1 to 32-7600001 incl., PA-32-300 with serial numbers 32-40000 to 32-7640029 incl., and PA-32R-300 with serial numbers 32R-7680001 to 32R-7680013 incl.
AE - Used on PA-32-260 with serial numbers 32-7600002 and up, PA-32-300 with serial numbers 32-7640030 and up, and PA-32R-300 with serial numbers 32R-7680014 and up.
AF - Used on PA-32-260 with serial numbers 32-7400001 to 32-7600001 incl., and PA-32-300 with serial numbers 32-7440001 to 32-7640029 incl.
AG - Used on PA-32-260 with serial numbers 32-7600002 and up, and PA-32-300 with serial numbers 32-7640030 and up
AH - Used on PA-32-260 with serial numbers 32-1111 to 32-7600001 incl., PA-32-300 with serial numbers 32-40566 to 32-7640029 incl., and PA-32R-300 with serial numbers 32R-7680001 to 32R-7680013 incl.
AJ - Used on PA-32-260 with serial numbers 32-1 to 32-7700010 incl., PA-32-300 with serial numbers 32-40000 to 32-7740034 incl., and PA-32R-300 with serial numbers 32R-7680001 to 32R-7780150 incl.
AK - Used on PA-32-260 with serial numbers 32-7700011 and up, PA-32-300 with serial numbers 32-7740035 and up, and PA-32R-300 with serial numbers 32R-7780151 and up.

PIPER PARTS CATALOG

Figure and Index Number	Part Number	Code	NOMENCLATURE	No. Req.	SERIAL NUMBERS AFFECTED
11-1	88311-00	D	COCKPIT ASSEMBLY - Center	1	
	88311-06	E	COCKPIT ASSEMBLY - Center	1	
	88311-07	J	COCKPIT ASSEMBLY - Center	1	
	88703-00	AF	COCKPIT ASSEMBLY - Center	1	
	99890-910	AG	COCKPIT ASSEMBLY - Center	1	
	38001-910	L	COCKPIT ASSEMBLY - Center	1	
-2	88738-00	AA	CLIP - Door latch lock	1	
-3	88696-00	K	ANGLE - Upper cockpit, left	1	
	88696-01	K	ANGLE - Upper cockpit, right	1	
-4	88697-00	K	ANGLE - Upper cockpit	1	
-5	88364-00	Y	CHANNEL - Upper cockpit	1	
-6	62420-08	C	RETAINER - Upper cockpit, left	1	
	79296-12	B,H	RETAINER - Upper cockpit, left	1	
	62420-23	F	RETAINER - Upper cockpit, left, upper	1	
	69891-06	AE	RETAINER - Upper cockpit, left, upper	1	
	79296-24	B,F	RETAINER - Upper cockpit, left, upper	1	
	69891-08	B,AE	RETAINER - Upper cockpit, left, upper	1	
	62420-25	F	RETAINER - Upper cockpit, left, lower	1	
	69891-02	AE	RETAINER - Upper cockpit, left, lower	1	
	79296-26	B,F	RETAINER - Upper cockpit, left, lower	1	
	69891-04	B,AE	RETAINER - Upper cockpit, left, lower	1	
	62420-10	C	RETAINER - Upper cockpit, right	1	
	79296-13	B,H	RETAINER - Upper cockpit, right	1	
	62420-24	F	RETAINER - Upper cockpit, right, upper	1	
	69891-07	AE	RETAINER - Upper cockpit, right, upper	1	
	79296-25	B,F	RETAINER - Upper cockpit, right, upper	1	
	69891-09	B,AE	RETAINER - Upper cockpit, right, upper	1	
	62420-26	F	RETAINER - Upper cockpit, right, lower	1	
	69891-03	AE	RETAINER - Upper cockpit, right, lower	1	
	79296-27	B,F	RETAINER - Upper cockpit, right, lower	1	
	69891-05	B,AE	RETAINER - Upper cockpit, right, lower	1	
-7	62479-00	AD	CHANNEL - Upper cockpit	1	
	62479-02	AE	CHANNEL - Upper cockpit	1	
-8	62516-00		CLIP - Channel assembly, upper cockpit	1	
-9	68382-00	AD	CHANNEL ASSEMBLY - Upper cockpit, left	1	
	68382-02	AE	CHANNEL ASSEMBLY - Upper cockpit, left	1	
-10	68352-01	AD	CHANNEL - Upper cockpit, right	1	
	68352-03	AE	CHANNEL - Upper cockpit, right	1	
-11	62874-03	Q	CHANNEL - Upper cockpit, right	1	
	62874-04	N	CHANNEL - Upper cockpit, right	1	
	62874-06	AE	CHANNEL - Upper cockpit, right	1	
-12	79162-00		DOUBLER - Antenna	1	
-13	62873-03	Q	PAN ASSEMBLY - Upper	1	
	62873-10	N	PAN ASSEMBLY - Upper	1	
	79661-901	AE	PAN ASSEMBLY - Upper	1	
-14	62873-05	Q	PAN - Inner	1	
	62873-11	N	PAN - Inner	1	
	79661-05	AE	PAN - Inner	1	
-15	62873-08	Q	PAN - Outer	1	
	62873-12	N	PAN - Outer	1	
	79661-06	AE	PAN - Outer	1	

PIPER PARTS CATALOG

Figure and Index Number	Part Number	Code	NOMENCLATURE	No. Req.	SERIAL NUMBERS AFFECTED
11-16	63837-00		LOOP ASSEMBLY - Forward door latch	1	
-17	66363-00	Q	PLATE - Forward door latch	1	
	79234-00	N	PLATE - Forward door latch	1	
-18	63257-00	AD	BUSHING - Striker plate	2	
-19	66346-00	Q	SUPPORT ASSEMBLY - Latch	1	
-20	63293-02	AD	PLATE - Door latch striker	1	
	79639-02	AE	PLATE - Door latch striker	1	
-21	66312-00	P	HAT ASSEMBLY - Windshield	1	
	69481-00	AH	HAT ASSEMBLY - Windshield	1	
	69481-02	AE	HAT ASSEMBLY - Windshield	1	
	69481-03	B	HAT ASSEMBLY - Windshield	1	
-22	66313-00		FITTING - Windshield	1	
-23	66314-00	P	BRACKET - Windshield hat, left	1	
	69483-00	Q	BRACKET - Windshield hat, left	1	
	66314-01	P	BRACKET - Windshield hat, right	1	
	69483-01	Q	BRACKET - Windshield hat, right	1	
-24	66316-00	D	FRAME ASSEMBLY - Canted, Fuselage, Sta. 86	1	
	66316-16	V	FRAME ASSEMBLY - Canted, fuselage, Sta. 86	1	
	66316-17	X	FRAME ASSEMBLY - Canted, fuselage, Sta. 86	1	
	69689-00	AE	FRAME ASSEMBLY - Canted, fuselage, Sta. 86	1	
-25	66316-02	D	CHANNEL ASSEMBLY - Left	1	
	66316-14	V	CHANNEL ASSEMBLY - Left	1	
	66316-03	D	CHANNEL ASSEMBLY - Right	1	
	66316-15	V	CHANNEL ASSEMBLY - Right	1	
-26	66320-00	Y	FITTING - Windshield bow	1	
	66320-02	X	FITTING - Windshield bow	1	
	66320-03	AE	FITTING - Windshield bow	1	
-27	66326-00	AD	FRAME ASSEMBLY - Sta. 109	1	
	66326-02	AE	FRAME ASSEMBLY - Sta. 109	1	
-28	66331-00		CHANNEL - Fuselage frame, left	1	
	66331-01		CHANNEL - Fuselage frame, right	1	
-29	66327-00		CHANNEL ASSEMBLY	1	
-30	66326-00		CHANNEL - Splice	1	
-31	62511-02	AD	PAN ASSEMBLY - Side	1	
	79561-903	AE	PAN ASSEMBLY - Side	1	
-32	62484-02	AD	PAN - Upper cockpit, outer	1	
	79561-07	AE	PAN - Upper cockpit, outer	1	
-33	62486-02	AD	PAN - Upper cockpit, inner	1	
	79561-08	AE	PAN - Upper cockpit, inner	1	
-34	62576-00	T	BRACKET - Seat belt attachment	1	
-35	66333-00		CHANNEL - Fuselage frame, left	1	
	66333-01		CHANNEL - Fuselage frame, right	1	
-36	66335-00		CHANNEL - Splice	1	
-37	66336-00	AD	RETAINER - Windshield, left	1	
	66336-01	AD	RETAINER - Windshield, right	1	
-38	66342-04	AD	CHANNEL ASSEMBLY - Upper cockpit, center, left	1	
	66342-05	AD	CHANNEL ASSEMBLY - Upper cockpit, center, right	1	
	66342-10	AE	CHANNEL - Upper cockpit, center, left	1	
	66342-11	AE	CHANNEL - Upper cockpit, center, right	1	
-39	66306-00		HAT - Upper cockpit	1	
-40	66307-00		HAT - Upper cockpit	1	

PIPER PARTS CATALOG

Figure and Index Number	Part Number	Code	NOMENCLATURE	No. Req.	SERIAL NUMBERS AFFECTED
11-41	69742-00	AA	PLATE - Door latch	1	
-42	69738-00	AA	PLATE ASSEMBLY - Door latch	1	
-43	69740-00	N	CHANNEL - Door latch	1	
	69740-02	AE	CHANNEL - Door latch	1	
-43a	76467-04	AE	CHANNEL - Upper cockpit	1	
-44	62510-00	AD	LOWER PAN ASSEMBLY - Upper cockpit	1	
	79547-00	AE	LOWER PAN ASSEMBLY - Upper cockpit	1	
-45	62492-00	AD	PAN - Upper cockpit, inner	1	
	79547-03	AE	PAN - Upper cockpit, inner	1	
	62493-00	AD	PAN - Upper cockpit, outer	1	
	79547-02	AE	PAN - Upper cockpit, outer	1	
-46	62656-00		ANGLE ASSEMBLY - Door holder	1	
-47	62501-00	AD	CHANNEL - Upper cockpit	1	
-47a	79561-04	AE	JAMB - Door, forward	1	
-48	78012-00	M	DOUBLER ASSEMBLY - Sta. 124.25	1	
-49	68315-00		CHANNEL - Upper cockpit, left	1	
	68315-01		CHANNEL - Upper cockpit, right	1	
-50	68347-00		GUSSET - Upper cockpit, left	1	
-51	68323-00		GUSSET - Upper cockpit, left	1	
	68323-01		GUSSET - Upper cockpit, right	1	
-52	68324-00		GUSSET - Upper cockpit, left	1	
-53	68344-00		GUSSET - Upper cockpit, left	1	
-54	68328-00	U	CHANNEL - Sta. 122 to Sta. 132, left	1	
	68328-02	S	CHANNEL - Sta. 122 to Sta. 132, left	1	
-55	68330-00	T	WEB ASSEMBLY - Sta. 128, left	1	
	68330-03	R	WEB ASSEMBLY - Sta. 128, left	1	
	68330-06	S	WEB ASSEMBLY - Sta. 128, left	1	
-56	68332-00		FRAME ASSEMBLY - Sta. 128	1	
-57	68336-00		STIFFENER - Left side	2	
-58	68339-00		STIFFENER - Left side	1	
-59	68349-00		ANGLE - Upper cockpit, center, right	1	
-60	68322-00		GUSSET ASSEMBLY - Upper cockpit, center	1	
-61	68981-00		CHANNEL ASSEMBLY - Upper cockpit, center, left	1	
	68346-01		CHANNEL - Upper cockpit, center, right	1	
-62	68340-00		CHANNEL - Upper cockpit, center, left	1	
	68351-00		CHANNEL - Upper cockpit, center, right	1	
-63	68341-00		CHANNEL - Upper cockpit, center, left	1	
	68343-00	Y	CHANNEL - Upper cockpit, center, right	1	
	68343-02	K	CHANNEL - Upper cockpit, center, right	1	
-64	65122-00	Z	GUSSET - Upper cockpit	1	
	67742-00	L	GUSSET - Upper cockpit	1	
-65	68364-00	AJ	CHANNEL - Upper cockpit	1	
	69748-00	AK	CHANNEL - Upper cockpit	1	
-66	62506-00		CLIP - Upper cockpit	5	
-67	402 060		BOLT - Eye, hinge (AN44-20A)	2	
	407 588	W	WASHER - (AN960-516L)	2	
	404 837	W	NUT - (MS20364-524C)	2	
-68	68226-02	P	CHANNEL - Armrest support, right	1	
	69430-05	AB	CHANNEL - Armrest support, left and right	2	
	99422-02	AC	CHANNEL - Armrest support, left and right	2	
-69	68229-02	P	CHANNEL - Armrest support	2	
	69430-05	AB	CHANNEL - Armrest support	2	
	99422-02	AC	CHANNEL - Armrest support	2	

PIPER PARTS CATALOG

Figure and Index Number	Part Number	Code	NOMENCLATURE	No. Req.	SERIAL NUMBERS AFFECTED
11-70	68363-00		CLIP	1	
-71	68362-00		CLIP	1	
-72	62606-03		CLIP - Upper cockpit	1	
-73	62606-04		CLIP - Upper cockpit	1	
-74	62697-00	AD	CHANNEL ASSEMBLY - Upper fuselage	1	
	62697-02	AE	CHANNEL ASSEMBLY - Upper fuselage	1	
-75	63900-46		BUSHING - Door hinge attachment, lower	1	
	63900-47		BUSHING - Door hinge attachment, upper	1	
-76	402 057		BOLT - Eye, door hinge attachment (AN44-17A)	2	
	407 588	W	WASHER - Door hinge attachment (AN960-516L)	2	
	404 237	W	NUT - Door hinge attachment (MS20364-524C)	2	
-77	63900-46		BUSHING	1	
-78	400 883		BOLT - (AN23-31A)	1	
	407 584	W	WASHER - (AN960-10L)	1	
	404 987	W	NUT - (MS20365-1032C)	1	
-79	68223-00		ANGLE - Upper cockpit, center	1	
-80	68319-00		GUSSET - Upper cockpit	2	
-81	68225-00		GUSSET - Upper cockpit	1	
-82	63900-46		BUSHING	2	
-83	68334-00		JAMB - Door, upper cockpit, center	1	

1C24

INTENTIONALLY LEFT BLANK

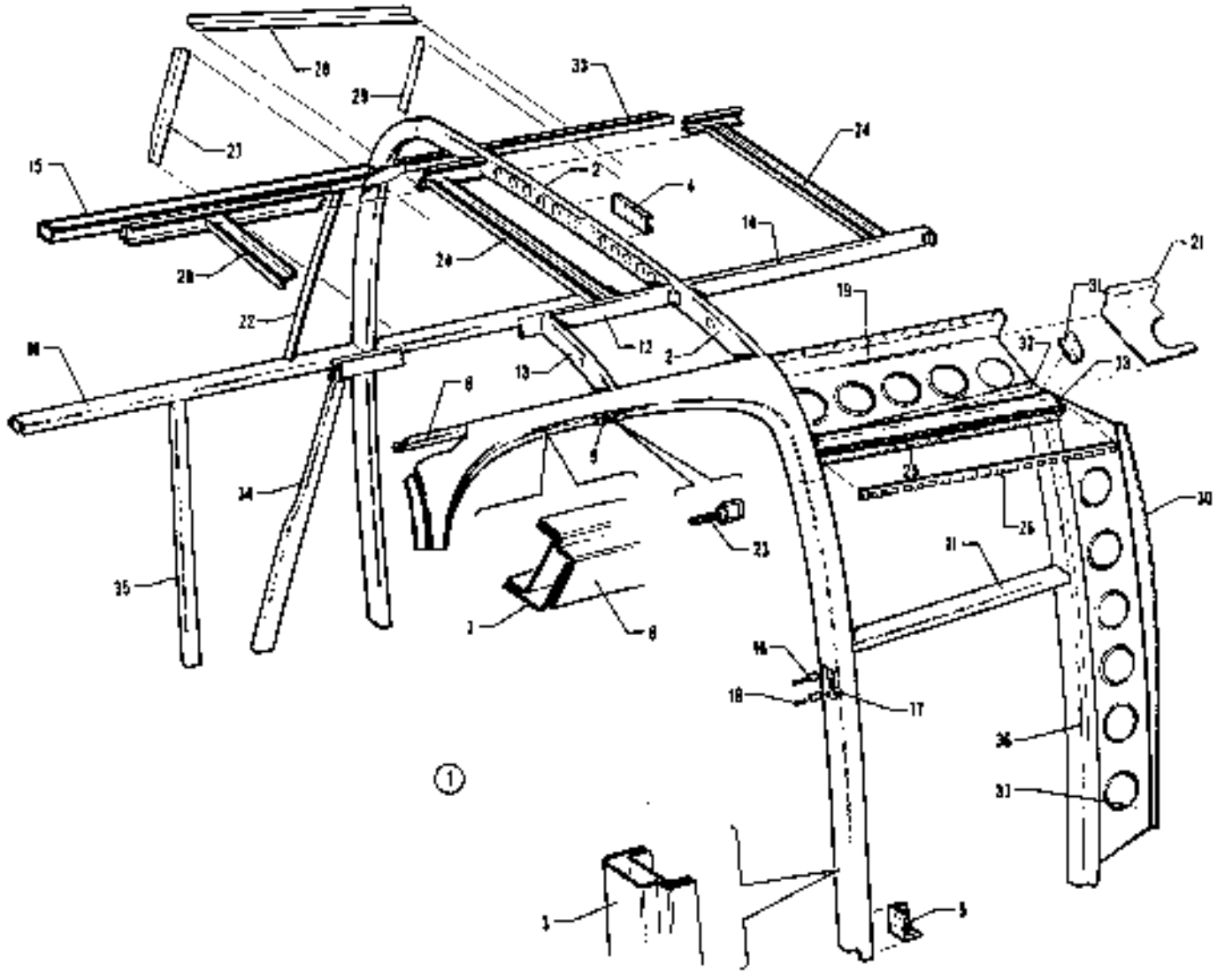

Figure 12. Upper Cockpit Assembly - Afr

CODE EXPLANATIONS FOR FIGURE 12

A - Used if Cargo Door is installed on PA-32-260 and PA-32-300 only.
B - Used on PA-32-260 with serial numbers 32-1 to 32-1320 incl., and PA-32-300 with serial numbers 32-40000 to 32-41018 incl.
C - Used on PA-32-260 with serial numbers 32-7100001 to 32-7100038 incl., and PA-32-300 with serial numbers 32-7140001 to 32-7140065 incl.
D - Used on PA-32-260 with serial numbers 32-7200001 to 32-7300076 incl., and PA-32-300 with serial numbers 32-7240001 to 32-7340201 incl.
E - Used on PA-32-260 with serial numbers 32-7200001 to 32-7200055 incl., and PA-32-300 with serial numbers 32-7240001 to 32-7240147 incl.
F - Used on PA-32-260 with serial numbers 32-1 to 32-7200055 incl., and PA-32-300 with serial numbers 32-40000 to 32-7240147 incl.
G - Used on PA-32-260 with serial numbers 32-7400001 to 32-7800001 incl., and PA-32-300 with serial numbers 32-7440001 to 32-7640029 incl.
H - Used on PA-32R-300 only.
J - Used if Cargo Door is installed.
K - Used on PA-32-260 with serial numbers 32-1 to 32-1110 incl., and PA-32-300 with serial numbers 32-40000 to 32-40565 incl.
L - Used on PA-32-260 with serial numbers 32-1111 to 32-1320 incl., and PA-32-300 with serial numbers 32-40566 to 32-41018 incl.
M - Used on PA-32-260 with serial numbers 32-7100001 to 32-7600033 incl., PA-32-300 with serial numbers 32-7140001 to 32-7640142 incl., and PA-32R-300 with serial numbers 32R-7680001 to 32R-7680038 incl.
N - Used on PA-32-260 with serial numbers 32-7200001 to 32-7200055 incl., and PA-32-300 with serial numbers 32-7240001 to 32-7240147 incl.
O - Used on PA-32-260 with serial numbers 32-1 to 32-7300076 incl., and PA-32-300 with serial numbers 32-40000 to 32-7340201 incl.
P - Used on PA-32-260 with serial numbers 32-7400001 and up, PA-32-300 with serial numbers 32-7440001 and up, and PA-32R-300.
Q - Used on PA-32-260 with serial numbers 32-7200001 and up, PA-32-300 with serial numbers 32-7240001 and up, and PA-32R-300.
R - Used on PA-32-260 with serial numbers 32-7600002 and up, and PA-32-300 with serial numbers 32-7640030 and up.
S - Used if Cargo Door is not installed.
T - Used on PA-32-260 with serial numbers 32-7700001 and up, PA-32-300 with serial numbers 32-7740001 and up, and PA-32R-300 with serial numbers 32R-7780001 and up.

PIPER PARTS CATALOG

Figure and Index Number	Part Number	Code	NOMENCLATURE	No. Req.	SERIAL NUMBERS AFFECTED
12-1	68355-00	B	COCKPIT ASSEMBLY - Aft	1	
	68366-07	C	COCKPIT ASSEMBLY - Aft	1	
	68366-08	E	COCKPIT ASSEMBLY - Aft	1	
	69104-00	A,B	COCKPIT ASSEMBLY - Aft	1	
	69104-02	A,C	COCKPIT ASSEMBLY - Aft	1	
	69104-03	A,D	COCKPIT ASSEMBLY - Aft	1	
	69104-05	A,G	COCKPIT ASSEMBLY - Aft	1	
	69890-911	A,B	COCKPIT ASSEMBLY - Aft	1	
	38001-811	H	COCKPIT ASSEMBLY - Aft	1	
-2	68357-00		* CHANNEL - Sta 165, left	1	
	68984-00	J	* CHANNEL - Sta 165, left	1	
	68357-01		* CHANNEL - Sta 165, right	1	
-3	68358-00	F,S	* JAMB - Rear door	1	
-4	68359-00		* CHANNEL - Splice	1	
-5	68360-02	F,S	* FITTING - Sta 168	1	
-6	68366-02	F,S	* SILL - Rear door	1	
	69105-02	J	* SILL - Rear door	1	
-7	68365-03	F,S	* SILL - Rear door	1	
	69105-03	J	* SILL - Rear door	1	
-8	68368-00		* CHANNEL - Rear door	1	
-9	68363-00		* PLATE - Door latch	1	
-10	68376-00		* LONGERON - Upper cockpit, aft	1	
-11	68370-00	F,S	* LONGERON - Upper cockpit, aft, left	1	
	68370-01		* LONGERON - Upper cockpit, aft, right	1	
-12	68371-00		* CHANNEL - Upper cockpit, aft, left	1	
	68371-01		* CHANNEL - Upper cockpit, aft, right	1	
-13	68372-00		* SUPPORT ASSEMBLY - Latch	1	
-14	68373-00		* LONGERON - Upper cockpit, aft, left	1	
	68373-01		* LONGERON - Upper cockpit, aft, right	1	
-15	68374-00		* CHANNEL - Upper cockpit	1	
-16	63257-00	F,S	* BUSHING - Striker plate	2	
-17	63293-02	F,S	* PLATE - Striker	1	
-18	416 464	F,S,W	* SCREW - (AN526-832R16)	2	
-19	68966-00	J	* WEB - Cargo door, upper	1	
-20	68364-00	D	* CHANNEL - Upper cockpit	1	
-21	96851-00	H,J,Q	* DOUBLER - Shoulder harness, left	1	
-22	68378-00		ANGLE - Upper cockpit, aft	1	
-23	63037-00		LOOP ASSEMBLY - Aft door latch	1	
-24	68384-00		CHANNEL - Upper cockpit	2	
-25	68967-00	J	STIFFENER - Cargo door, upper	1	
-26	68974-00	J	HINGE HALF - Cargo door	1	
-27	69720-00	P	ANGLE - Window, forward	1	
-28	69718-00	P	ANGLE - Window, top	1	
-29	69718-00	P	ANGLE - Window, rear	1	
-30	68971-00	J	CHANNEL - Cargo door web stiffener	1	
-31	68986-02	J	CLIP - Cargo door web	1	
	68986-03	J	CLIP - Cargo door web	1	
-32	99729-00	N	ANGLE - Headlining attachment, left	1	
	99729-01	Q	ANGLE - Headlining attachment, right	1	
-33	68369-00		ZEE - Upper cockpit, aft, left	1	
	68369-01		ZEE - Upper cockpit, aft, right	1	

Figure and Index Number	Part Number	Code	NOMENCLATURE	No. Req.	SERIAL NUMBERS AFFECTED
12-34	68229-03	K	CHANNEL - Armrest support	1	
	68430-07	L	CHANNEL - Armrest support	1	
	99422-04	M	CHANNEL - Armrest support	1	
	69971-02	T	CHANNEL - Armrest support	1	
-35	68229-03	K	CHANNEL - Armrest support	1	
	68430-06	L	CHANNEL - Armrest support	1	
	99422-03	M	CHANNEL - Armrest support	1	
	69971-03	T	CHANNEL - Armrest support	1	
-36	68885-00	J	JAMB ASSEMBLY - Cargo door, aft	1	
-37	68970-00	J	WEB - Cargo door jamb stiffener	1	

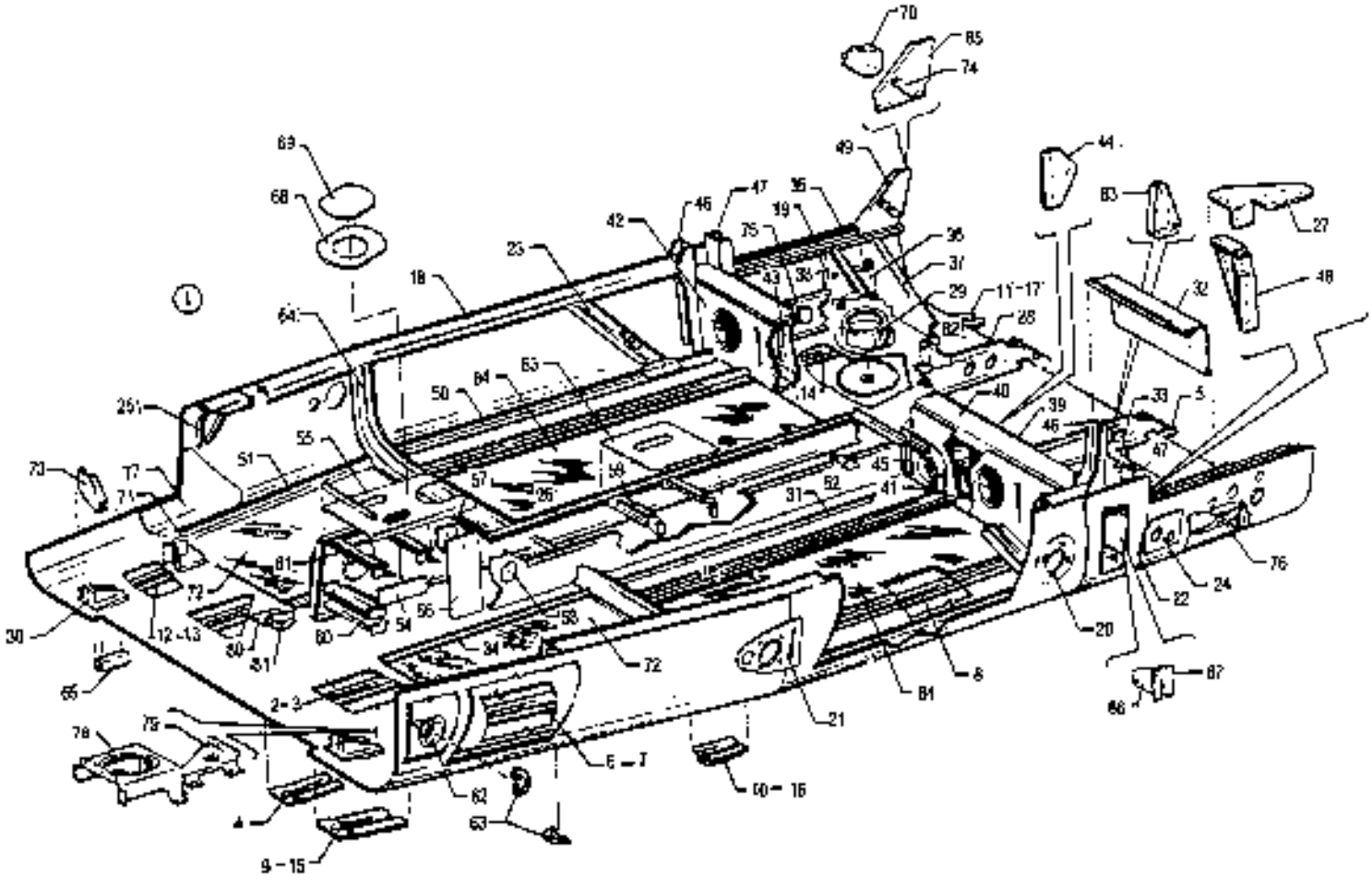

Figure 13. Lower Cockpit Assembly - Forward

CODE EXPLANATIONS FOR FIGURE 13

A - Used on PA-32-260 only.
B - Used on PA-32-300 only.
C - Used on PA-32-260 with serial numbers 32-1 to 32-7100038 inclusive, and PA-32-300 with serial numbers 32-40000 to 32-7140086 incl.
D - Used on PA-32-260 with serial numbers 32-7200001 and up, PA-32-300 with serial numbers 32-7240001 and up, and PA-32R-300.
E - Used on PA-32-300 with serial numbers 32-7240056 and up, and PA-32R-300 if air conditioning is installed.
F - Used on PA-32R-300 only.
G - Used on PA-32-300 and PA-32R-300 only.
H - Used on PA-32-260 with serial numbers 32-7200001 and up, and PA-32-300 with serial numbers 32-7240001 to 32-7840222 incl.
J - Used on PA-32-260 with serial numbers 32-1 and up, and PA-32-300 with serial numbers 32-40000 to 32-7840222 incl.
K - Used on PA-32-260 with serial numbers 32-878 and up, PA-32-300 with serial numbers 32-40266 and up, and PA-32R-300.
L - Used on PA-32-260 with serial numbers 32-7400001 and up, PA-32-300 with serial numbers 32-7440001 and up, and PA-32R-300.
M - Used on PA-32-300 with serial numbers 32-7940001 and up, and PA-32R-300 with serial numbers 32R-7680001 and up.
N - Used on PA-32-300 with serial numbers 32-40000 to 32-7840222 incl., and PA-32R-300 with serial numbers 32R-7680001 and up.
P - Reference latest revision to Piper Service Bulletin 946.

PIPER PARTS CATALOG

Figure and Index Number	Part Number	Code	NOMENCLATURE	No. Req.	SERIAL NUMBERS AFFECTED
13-1	68501-00	A	COCKPIT ASSEMBLY - Forward	1	32-1 to 32-375 inclusive
	68950-00	A	COCKPIT ASSEMBLY - Forward	1	32-376 to 32-7100038 incl
	68950-03	A	COCKPIT ASSEMBLY - Forward	1	32-7200001 to 32-7300076 incl
	68950-04	A	COCKPIT ASSEMBLY - Forward	1	32-7400001 to 32-7600001 incl
	69990-906	A	COCKPIT ASSEMBLY - Forward	1	32-7600002 and up
	69029-00	B	COCKPIT ASSEMBLY - Forward	1	32-40000 to 32-7140088 incl
	69029-03	B	COCKPIT ASSEMBLY - Forward	1	32-7240001 to 32-7340201 incl
	69029-04	B	COCKPIT ASSEMBLY - Forward	1	32-7440001 to 32-7640029 incl
	69890-916	B	COCKPIT ASSEMBLY - Forward	1	32-7640030 to 32-7840222 incl
	69890-926	B	COCKPIT ASSEMBLY - Forward	1	32-7940001 and up
	39001-906	F	COCKPIT ASSEMBLY - Forward	1	
-2	68501-07		* HAT ASSEMBLY - Inboard, left and right	2	
-3	68505-00		* * HAT	1	
-4	62543-00		* * FAIRING	1	
	62543-02	E	* * FAIRING	1	
-5	68506-00		* * FAIRING	1	
-6	68501-05		* HAT ASSEMBLY - Outboard, left	1	
-7	68502-00		* * HAT - Front	1	
-8	62524-00		* * HAT - Rear	1	
-9	62544-00		* * FAIRING - Front	1	
-10	62558-00		* * FAIRING - Center	1	
-11	68503-00		* * FAIRING - Rear	1	
-12	68501-06		* HAT ASSEMBLY - Outboard, right	1	
-13	68502-01		* * HAT - Front	1	
-14	62524-01		* * HAT - Rear	1	
-15	62544-01		* * FAIRING - Front	1	
-16	62558-01		* * FAIRING - Center	1	
-17	68503-01		* * FAIRING - Rear	1	
-18	68504-00		* LONGERON - Left, outboard	1	
	68504-01		* LONGERON - Right, outboard	1	
-19	68508-02		* LONGERON - Left rear, outboard	1	
	68508-01		* LONGERON - Right rear, outboard	1	
-20	68539-00		* DOUBLER ASSEMBLY - Sta 100	2	
-21	68540-00		* DOUBLER ASSEMBLY - Left, Sta 73	1	
	68540-01		* DOUBLER ASSEMBLY - Right, Sta 73	1	
-22	68507-00		* DOUBLER - Main spar box, left	1	
	68507-01		* DOUBLER - Main spar box, right	1	
-23	62686-02	C	* SUPPORT ASSEMBLY - Seat belt attachment, left	1	
	96890-00	D	* SUPPORT ASSEMBLY - Seat belt attachment, left	1	
	62686-01	C	* SUPPORT ASSEMBLY - Seat belt attachment, right	1	
	96890-01	D	* SUPPORT ASSEMBLY - Seat belt attachment, right	1	
-24	68569-00	A,B	* DOUBLER - Left, Sta 108	1	
-25	62581-01		* BRACKET - Lower assembly, left	1	
	62581-00		* BRACKET - Lower assembly, right	1	
-26	68534-00	C	* CHANNEL - Tunnel, left	1	
	68534-02	D	* CHANNEL - Tunnel, left	1	
	68534-01	C	* CHANNEL - Tunnel, right	1	
	68534-03	D	* CHANNEL - Tunnel, right	1	
-27	68528-00		* GUSSET - Sta 108, left	1	
	68528-01		* GUSSET - Sta 108 right	1	
-28	62763-00		* SUPPORT - Torque shaft center	2	
-29	65071-00		* BASE ASSEMBLY - Fuel selector	1	
-30	68533-00		* FITTING - Lower engine mount, left	1	
	68533-01		* FITTING - Lower engine mount, right	1	
-31	68538-00		* ANGLE - Heat duct attaching, rear	2	
-32	65414-00	A	* COVER ASSEMBLY - Fuel pump box	1	32-1 to 32-375 inclusive
	65459-00	A	* COVER ASSEMBLY - Fuel pump box	1	32-376 and up

When ordering, always specify Part Number, Description and Serial Number of Aircraft

PIPER PARTS CATALOG

Figure and Index Number	Part Number	Code	NOMENCLATURE	No. Req.	SERIAL NUMBERS AFFECTED
13-33	65415-00	A	* BOX ASSEMBLY - Fuel pump	1	32-1 to 32-375 inclusive
	65428-00	A	* BOX ASSEMBLY - Fuel pump	1	32-376 and up
	69062-00	N	* BRACKET - Fuel pump	1	
	38417-02	B	* ANGLE - Fuel pump mounting, left	1	32-7940001 and up
	38417-03	B	* ANGLE - Fuel pump mounting, right	1	32-7940001 and up
-34	68537-00		* ANGLE - Heat duct attaching, front	2	
-35	68509-00	C	* ANGLE - Forward lower cockpit, left	1	
	68509-02	D	* ANGLE - Forward lower cockpit, left	1	
	68509-01	C	* ANGLE - Forward lower cockpit, right	1	
	68509-03	D	* ANGLE - Forward lower cockpit, right	1	
-36	62421-00		* FITTING - Flap, left	1	
	62421-01		* FITTING - Flap, right	1	
-37	68511-00		* BRACKET - Torque tube support, left	1	
	68511-01		* BRACKET - Torque tube support, right	1	
-38	68512-00		* BRACKET - Torque tube support, left	1	
	68512-01		* BRACKET - Torque tube support, right	1	
-39	68513-00	C	* BOX ASSEMBLY - Spar, lower cockpit	1	
	68513-04	H	* BOX ASSEMBLY - Spar, lower cockpit	1	
	68513-08	B	* BOX ASSEMBLY - Spar, lower cockpit	1	32-7940001 and up
	68513-06	F	* BOX ASSEMBLY - Spar, lower cockpit	1	
-40	68522-00	J	* * CHANNEL - Spar box, top	1	
	38156-00	M	* * CHANNEL - Spar box, top	1	
-41	68523-00		* * CHANNEL - Spar box, bottom	1	
-42	68514-00		* * WEB - Spar box, front	1	
-43	68515-00		* * WEB - Spar box, rear	1	
-44	68571-00		* * BRACKET - Flap return spring	1	
-45	68921-00		* * TUBE - Cabin heat	2	
-46	68562-00		* * CHANNEL - Spar box, left	1	
	62545-00		* * CHANNEL - Spar box, right	1	
-47	68524-00		* * CHANNEL - Frame, left	1	
	68564-00		* * CHANNEL - Frame, right	1	
-48	96333-00		* GUSSET - Floor support, left	1	
	96333-01		* GUSSET - Floor support, right	1	
-49	68529-00	C	* GUSSET ASSEMBLY - Seat belt attachment	1	
-50	65657-00	K	* ANGLE - Panel reinforcement	2	
-51	65656-00	K	* ANGLE - Panel reinforcement, left	1	
	65656-01	K	* ANGLE - Panel reinforcement, right	1	
-52	68536-00	C	* ATTACHMENT - Seat belt, left	1	
	96877-00	D	* ATTACHMENT - Seat belt, outboard, left	1	
	96878-00	D	* ATTACHMENT - Seat belt, inboard, left	1	
	68536-01	C	* ATTACHMENT - Seat belt, right	1	
	96877-01	D	* ATTACHMENT - Seat belt, outboard, right	1	
	96878-01	D	* ATTACHMENT - Seat belt, inboard, right	1	
-53	68542-00		* PLATE - Tunnel, top	1	
-54	68543-00		* PLATE - Tunnel, side	2	
-55	62601-02		* PLATE - Tunnel, top front	1	
-56	62606-00		* STIFFENER - Tunnel, side	2	
-57	62607-00		* PLATE - Tunnel, side	2	
-58	62608-00		* DOUBLER - Tunnel, side	2	
-59	62679-00		* BRACKET ASSEMBLY - Tunnel, front	1	
	62679-01		* BRACKET ASSEMBLY - Tunnel, rear	1	
-60	62620-00		* BRACKET - Tunnel	2	
-61	62664-00		* ZEE ASSEMBLY - Tunnel	2	
-62	63218-05		* BOX ASSEMBLY - Ventilator	1	
-63	22482-00		* SCOOP - Air	2	
-64	68525-00	P	* FRAME ASSEMBLY - Sta. 73	1	
-65	38041-00	F	* FITTING ASSEMBLY - Drag link, left	1	
	38041-01	F	* FITTING ASSEMBLY - Drag link, right	1	

When ordering, always specify Part Number, Description, and Serial Number of Aircraft

PIPER PARTS CATALOG

Figure and Index Number	Part Number	Code	NOMENCLATURE	No. Req.	SERIAL NUMBERS AFFECTED
13-66	38136-00	F	* BRACKET - Pulley, aileron, forward left	1	
	38136-01	F	* BRACKET - Pulley, aileron, forward right	1	
-67	38136-08	F	* BRACKET - Pulley, aileron, rear left	1	
	38136-09	F	* BRACKET - Pulley, aileron, rear right	1	
-68	36665-03	B	* DOUBLER ASSEMBLY - Transponder antenna access	1	32-7940001 and up
-69	36665-02	B	* PLATE - Transponder antenna access	1	32-7940001 and up
-70	96884-00	D	BRACKET ASSEMBLY - Seat belt attachment, left	1	
	96884-01	D	BRACKET ASSEMBLY - Seat belt attachment, right	1	
-71	69776-00	L	BRACKET ASSEMBLY - Rudder pedal stop, left	1	
	69776-01	L	BRACKET ASSEMBLY - Rudder pedal stop, right	1	
-72	96700-04		FLOORBOARD - Lower cockpit, forward, left	1	
	96700-05		FLOORBOARD - Lower cockpit, forward, right	1	
-73	69264-00		RIB - Lower cockpit, forward	1	
-74	96696-00	D	LINK - Seat belt attachment	2	
-75	65125-00		STIFFENER - Lower cockpit, right	1	
-76	65127-00	A	STIFFENER - Lower cockpit, left	1	
	65126-01	G	STIFFENER - Lower cockpit, left	1	
-77	68531-00		DOUBLER - Right front, Sta. 49	1	
-78	38023-02	F	SUPPORT ASSEMBLY - Forward baggage	1	
-79	38023-03	F	SUPPORT ASSEMBLY - Forward baggage	1	
-80	38047-00	F	ANGLE - Mount, nose gear actuator	1	
-81	38047-02	F	FITTING - Mount, nose gear actuator	1	
-82	38055-00	F	SUPPORT - Diaphragm, landing gear	1	
-83	38056-00	F	SUPPORT - Actuator, landing gear	1	
-84	96684-00		FLOORBOARD - Lower cockpit, rear	2	
-85	96897-00	D	GUSSET - Seat belt attachment	1	

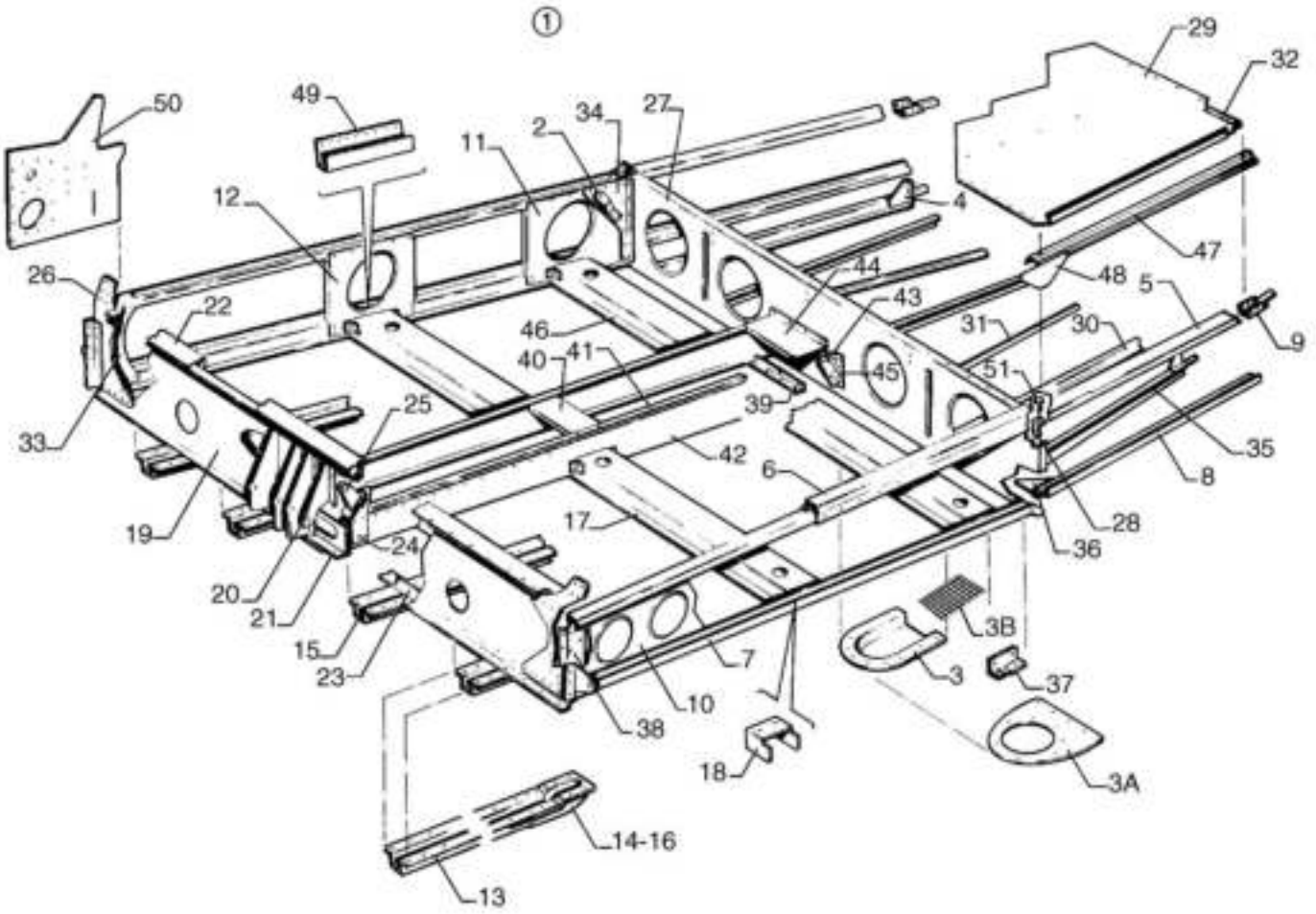

Figure 14. Lower Cockpit Assembly - Aft

CODE EXPLANATIONS FOR FIGURE 14

A - Used if Cargo Door is installed.
B - Used on PA-32-260 with serial numbers 32-7200001 and up, and PA-32-300 with serial numbers 32-7240001 and up, and PA-32R-300.
C - Used on PA-32-260 with serial numbers 32-1 to 32-971 incl., and PA-32-300 with serial numbers 32-40000 to 32-40319 incl.
D - Used on PA-32-260 with serial numbers 32-972 and up, PA-32-300 with serial numbers 32-40320 and up, and PA-32R-300.
E - Used on PA-32-260 with serial numbers 32-1 to 32-7100038 incl., and PA-32-300 with serial numbers 32-40000 to 32-7140086 incl.
F - Used on PA-32-300 and PA-32R-300 if air conditioning is installed.
G - Used on PA-32-260 with serial numbers 32-1 to 32-7200028 incl., and PA-32-300 with serial numbers 32-40000 to 32-7240095 incl.
H - Used on PA-32-260 with serial numbers 32-7200029 and up, PA-32-300 with serial numbers 32-7240096 and up, and PA-32R-300.
J - Used on PA-32-260 with serial numbers 32-7200001 to 32-7200055 incl., and PA-32-300 with serial numbers 32-7240001 to 32-7240147 incl.
K - Used on PA-32R-300 only.
L - Used on PA-32-260 with serial numbers 32-7200001 and up, and PA-32-300 with serial numbers 32-7240001 and up, and PA-32R-300.
M - Used on PA-32S-300 Seaplane Model only.
N - Used on PA-32-260 with serial numbers 32-1 to 32-7200055 incl., and PA-32-300 with serial numbers 32-40000 to 32-7240147 incl.
O - Used on PA-32-260 with serial numbers 32-7200001 to 32-7600001 incl., and PA-32-300 with serial numbers 32-7240001 to 32-7640029 incl.
P - Used on PA-32-260 with serial numbers 32-7600002 and up, and PA-32-300 with serial numbers 32-7640030 and up.
Q - Used on PA-32-260 with serial numbers 32-972 to 32-1320 incl., and PA-32-300 with serial numbers 32-40320 to 32-41018 incl.
R - Used on PA-32-260 with serial numbers 32-7100001 and up, PA-32-300 with serial numbers 32-7140001 and up, and PA-32R-300.
S - Used on PA-32-260 with serial numbers 32-1 to 32-7600033 incl., PA-32-300 with serial numbers 32-40000 to 32-7640142 incl., and PA-32R-300 with serial numbers 32R-7680001 to 32R-7680538 incl.
T - Used on PA-32-260 with serial numbers 32-7700001 and up, PA-32-300 with serial numbers 32-7740001 and up, and PA-32R-300 with serial numbers 32R-7780001 and up.
U - Used on PA-32-260 with serial numbers 32-1 and up, PA-32-300 with serial numbers 32-40000 to 32-7840222 incl., and PA-32R-300 with serial numbers 32-7680001 and up.
V - Used on PA-32-300 only.

PIPER PARTS CATALOG

Figure and Index Number	Part Number	Code	NOMENCLATURE	No. Req.	SERIAL NUMBERS AFFECTED
14-1	68601-00	E	COCKPIT ASSEMBLY - Aft	1	
	68601-09	J	COCKPIT ASSEMBLY - Aft	1	
	68601-05	A,E	COCKPIT ASSEMBLY - Aft	1	
	68601-10	A,O	COCKPIT ASSEMBLY - Aft	1	
	69890-907	A,P	COCKPIT ASSEMBLY - Aft	1	
	38001-907	K	COCKPIT ASSEMBLY - Aft	1	32R-7680001 to 32R-7680538 incl.
	38001-927	K	COCKPIT ASSEMBLY - Aft	1	32r-7780001 and up
-2	62576-00	E	* BRACKET - Seat belt attachment	2	
	96896-02	L	* BRACKET - Seat belt attachment	2	
-3	62974-00	C	* SCOOP - Cabin exhaust vent	1	
	66609-00	Q	* SCOOP - Cabin exhaust vent	1	
	66965-00	R	* SCOOP - Cabin exhaust vent	1	
-3a	65556-00	D	* DOUBLER - Cabin exhaust scoop	1	
	65556-02	F	* DOUBLER - Cabin exhaust scoop (less 4" hole)	1	
-3b	66971-00		* SCREEN (scoop)	1	
-4	65119-00		* GUSSET - Baggage compartment, left	1	
	65119-01		* GUSSET - Baggage compartment, right	1	
-5	68603-00		* LONGERON ASSEMBLY - Left	1	
	68657-00		* LONGERON ASSEMBLY - Right	1	
-6	68604-00	G	* JAMB - Door	1	
	68604-04	H	* JAMB - Door	1	
-7	68605-00		* CHANNEL - Left	1	
	68605-01		* CHANNEL - Right	1	
-8	68606-00		* CHANNEL - Left	1	
	68606-01		* CHANNEL - Right	1	
-9	68634-00		* CHANNEL - Splice, left	1	
	68634-01		* CHANNEL - Splice, right	1	
-10	68607-00	E	* WEB ASSEMBLY - Left	1	
	68607-03	B	* WEB ASSEMBLY - Left	1	
-11	68649-00	E	* WEB ASSEMBLY - Right	1	
	68649-03	B	* WEB ASSEMBLY - Right	1	
-12	68655-00	S	* WEB - Right	1	
	68655-02	T	* WEB - Right	1	
-13	68609-00		* HAT ASSEMBLY - Left, outboard	1	
	68609-01		* HAT ASSEMBLY - Right, outboard	1	
-14	62554-00		* * FAIRING	1	
-15	68612-00		* HAT ASSEMBLY - Inboard	2	
-16	62554-00		* * FAIRING	1	
-17	68653-00	S	* HAT ASSEMBLY - Seat support, left	1	
	68653-01	S	* HAT ASSEMBLY - Seat support, right	1	
	79583-02	T	* HAT ASSEMBLY - Seat support, left	1	
	79583-03	T	* HAT ASSEMBLY - Seat support, right	1	
-18	68677-00		* * DOUBLER ASSEMBLY - Seat support	1	
-19	68616-00		* WEB - Sta. 128	1	
-20	62563-00		* BRACKET - Left, Sta. 128	2	
	62563-01		* BRACKET - Right, Sta. 128	2	
-21	62566-00		* FORWARD DOUBLER - Rear seat support	1	
-22	68617-00		* STIFFENER - Frame, Sta. 128	1	
-23	68618-00		* ANGLE - Frame, Sta. 128	1	
-24	68619-00		* GUSSET - Sta. 128	1	
	68619-01		* GUSSET - Sta. 128	1	
-25	68620-00	E	* FITTING - Seat belt attachment	2	
	96880-00	B	* FITTING - Seat belt attachment	2	
-26	68621-00	U	* FITTING ASSEMBLY - Wing attachment, left	1	
	68621-02	V	* FITTING ASSEMBLY - Wing attachment, left	1	32-7940001 and up
	65388-60	M	* FITTING ASSEMBLY - Wing attachment, left	1	
	68621-01	U	* FITTING ASSEMBLY - Wing attachment, right	1	
	68621-03	V	* FITTING ASSEMBLY - Wing attachment, right	1	32-7940001 and up
	65388-61	M	* FITTING ASSEMBLY - Wing attachment, right	1	
-27	68624-00		* WEB - Sta. 168	1	
-28	68360-03	N	* FITTING - Sta. 168	1	

When ordering, always specify Part Number, Description, and Serial Number of Aircraft

Figure and Index Number	Part Number	Code	NOMENCLATURE	No. Req.	SERIAL NUMBERS AFFECTED
14-29	68631-00	N	PANEL - Baggage floor	1	
	69107-00	A	PANEL - Cargo floor	1	
-30	68632-00		ZEE ASSEMBLY - Baggage floor, left and center	2	
	68632-01		ZEE ASSEMBLY - Baggage floor, right	1	
-31	68637-00		ANGLE - Left	1	
	68637-01		ANGLE - Right	1	
-32	68638-02		ANGLE - Baggage floor, left	1	
	68638-01		ANGLE - Baggage floor, right	1	
-33	68639-00		GUSSET - Right	1	
-34	68640-00	E	DOUBLER - Seat belt attachment, left	1	
	68640-02	B	DOUBLER - Seat belt attachment, left	1	
	68640-01	E	DOUBLER - Seat belt attachment, right	1	
	68640-03	B	DOUBLER - Seat belt attachment, right	1	
-35	68641-00		STIFFENER - Left	1	
	68641-01		STIFFENER - Right	1	
-36	68642-00		GUSSET - Baggage floor, left	1	
	68642-01		GUSSET - Baggage floor, right	1	
-37	68643-00		ANGLE - Left	1	
	68643-01		ANGLE - Right	1	
-38	68644-00		ANGLE - Left, Sta. 129	1	
-39	68629-00		ANGLE ASSEMBLY - Cable guard, center	1	
-40	68656-00		CHANNEL - Tunnel top	1	
-41	68647-00		ANGLE ASSEMBLY - Tunnel side, left	1	
	68647-01		ANGLE ASSEMBLY - Tunnel side, right	1	
-42	68608-00		ANGLE - Aft tunnel wall, left	1	
	68608-01		ANGLE - Aft tunnel wall, right	1	
-43	68651-00	E	ATTACHMENT - Seat belt, left	1	
	96885-00	B	ATTACHMENT - Seat belt, left	1	
	68651-01	E	ATTACHMENT - Seat belt, right	1	
	96885-01	B	ATTACHMENT - Seat belt, right	1	
-44	68652-00		COVER - Aft tunnel	1	
-45	68626-00	E	ANGLE - Tunnel wall attachment, left	1	
	68626-02	B	ANGLE - Tunnel wall attachment, left	1	
	68626-01	E	ANGLE - Tunnel wall attachment, right	1	
	68626-03	B	ANGLE - Tunnel wall attachment, right	1	
-46	68654-00	S	HAT ASSEMBLY - Seat support, left	1	
	68654-01	S	HAT ASSEMBLY - Seat support, right	1	
	79747-00	T	HAT ASSEMBLY - Seat support, left	1	
	79747-01	T	HAT ASSEMBLY - Seat support, right	1	
-47	68972-00	A	JAMB ASSEMBLY - Cargo door, lower	1	
-48	68975-00	A	GUSSET - Cargo door, jamb	1	
-49	68678-00		DOUBLER ASSEMBLY - Step	1	
-50	68646-00		DOUBLER - Lower cockpit skin	2	
-51	400 441	N,W	BOLT - (AN3-7A)	1	
	407 564	N,W	WASHER - (AN960-10)	1	
	404 887	N,W	NUT - (MS20365-1032C)	1	

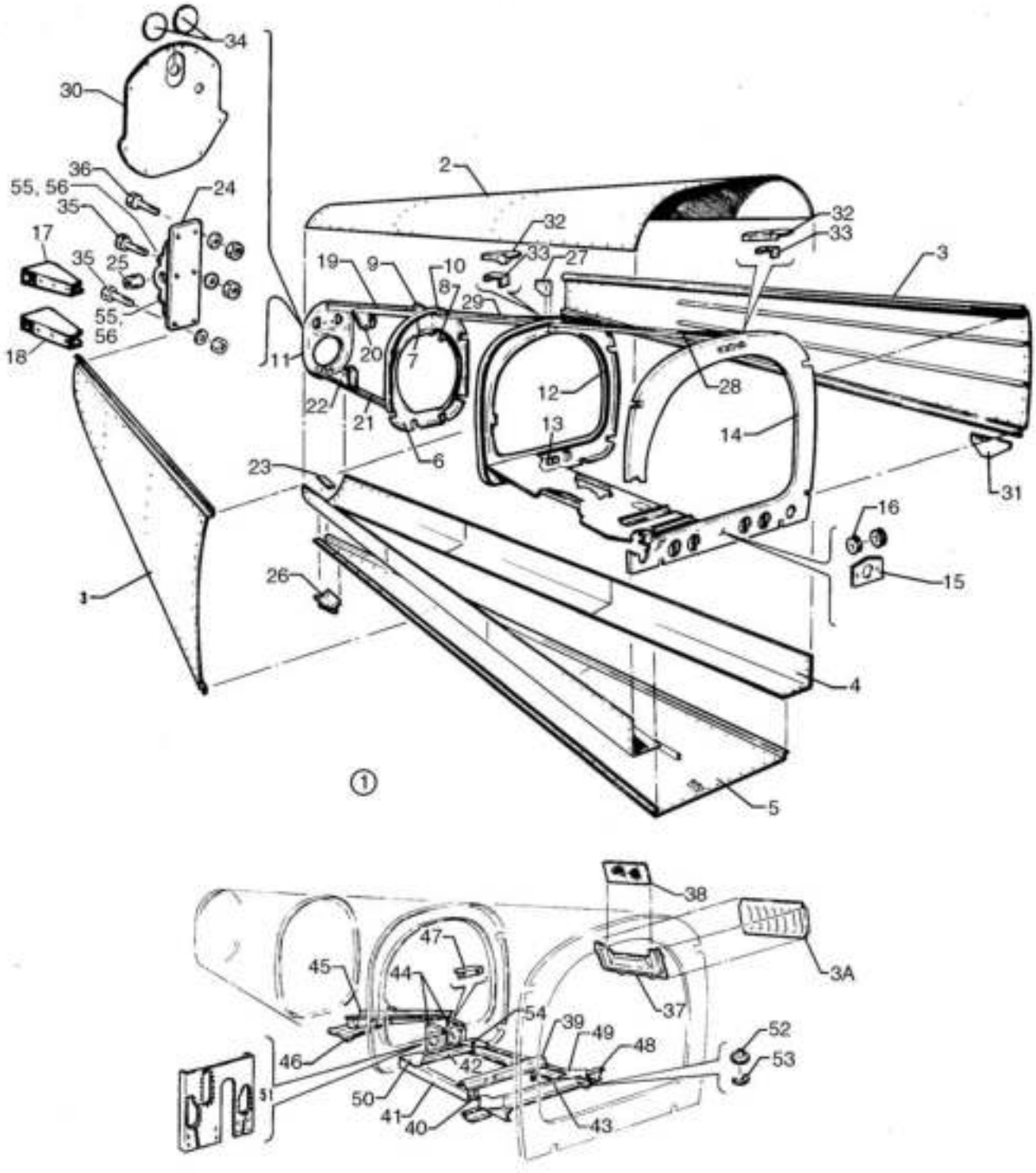

Figure 15. Fuselage Aft Section

CODE EXPLANATIONS FOR FIGURE 16

A - Used if Cargo Door is installed.
B - Used on PA-32S-300 Seaplane Model only.
C - Used on PA-32-300 with serial numbers 32-40853, 32-7240056 and up, and PA-32R-300 if air conditioning is installed.
D - Used on PA-32-260 with serial numbers 32-1 to 32-7200065 incl., and PA-32-300 with serial numbers 32-40000 to 32-7240147 incl.
E - Used on PA-32-260 with serial numbers 32-1 to 32-7300078 incl., and PA-32-300 with serial numbers 32-40000 to 32-7340201 incl.
F - Used on PA-32-260 with serial numbers 32-7400001 and up, and PA-32-300 with serial numbers 32-7440001 and up, and PA-32R-300.
G - Used on PA-32-300 if air conditioning is installed.
H - Used on PA-32-300 with serial numbers 32-7440001 and up, and PA-32R-300 if air conditioning is installed.
J - Used on PA-32-300 with serial numbers 32-40853, 32-7240056 to 32-7240080 incl., if air conditioning is installed.
W - These parts must be ordered from Service Spares Department, Piper Aircraft, Lock Haven, Penna.

PIPER PARTS CATALOG

Figure and Index Number	Part Number	Code	NOMENCLATURE	No. Req.	SERIAL NUMBERS AFFECTED
15-	99466		DRAWING - Fuselage Assembly, Aft Section		
-1	99466-06	D	FUSELAGE ASSEMBLY - Aft section	1	
	99466-18	G	FUSELAGE ASSEMBLY - Aft section	1	32-40853, 32-7240056 to 32-7240147 inclusive
	99466-07	A,E	FUSELAGE ASSEMBLY - Aft section	1	
	99466-19	A,G	FUSELAGE ASSEMBLY - Aft section	1	32-40853, 32-7240056 to 32-7340201 inclusive
	99466-11	A,F	FUSELAGE ASSEMBLY - Aft section	1	
	99466-20	A,H	FUSELAGE ASSEMBLY - Aft section	1	
-2	99468-00	E	SKIN - Upper	1	
	99468-03	F	SKIN - Upper	1	
-3	99470-00		SKIN ASSEMBLY - Side, left	1	
	99470-01		SKIN ASSEMBLY - Side, right	1	
	99649-14	C	SKIN ASSEMBLY - Side, left	1	
	99649-07	C	SKIN ASSEMBLY - Side, right	1	
-3a	99659-02	C	LOUVER - Air conditioning exhaust, left	1	
	99659-01	C	LOUVER - Air conditioning exhaust, right	1	
-4	99471-02		SKIN - Lower, side, left	1	
	99471-03		SKIN - Lower, side, right	1	
-5	99469-03		SKIN ASSEMBLY - Lower center	1	
	99649-08	C	SKIN ASSEMBLY - Lower center	1	
-6	62444-03	E	BULKHEAD ASSEMBLY - Fuselage, Sta. 228	1	
	62444-05	F	BULKHEAD ASSEMBLY - Fuselage, Sta. 228	1	
-7	62753-00		BRACKET - Stabilator trim	1	
-8	62817-00	E	BRACKET - Stabilator trim indicator pulley	1	
-9	62463-00		FITTING - Frame, Sta. 228	1	
	66388-12	B	FITTING - Frame, Sta. 228	1	32S-40000 to 32S-7240147 Incl.
-10	66955-00	E	DOUBLER - Frame, Sta. 228.30	1	
	79272-00	F	DOUBLER - Frame, Sta. 228.30	1	
-11	62445-00		BULKHEAD ASSEMBLY - Fuselage, Sta. 256	1	
-12	62443-00		BULKHEAD ASSEMBLY - Fuselage, Sta. 191	1	
-13	67249-00		FAIRLEAD	1	
-14	68680-00	D	BULKHEAD ASSEMBLY - Fuselage, Sta. 187	1	
	89106-00	A	BULKHEAD ASSEMBLY - Fuselage, Sta. 187	1	
-15	62665-02		FAIRLEAD	3	
-16	62711-04		PULLEY	2	
-17	62413-00		FITTING ASSEMBLY - Top tail cone, left	1	
	66388-05	B	FITTING ASSEMBLY - Top tail cone, left	1	32S-40000 to 32S-7240147 Incl.
	62413-01		FITTING ASSEMBLY - Top tail cone, right	1	
	66388-07	B	FITTING ASSEMBLY - Top tail cone, right	1	32S-40000 to 32S-7240147 Incl.
-18	62414-00		FITTING ASSEMBLY - Bottom tail cone, left	1	
	66388-08	B	FITTING ASSEMBLY - Bottom tail cone, left	1	32S-40000 to 32S-7240147 Incl.
	62414-01		FITTING ASSEMBLY - Bottom tail cone, right	1	
	66388-09	B	FITTING ASSEMBLY - Bottom tail cone, right	1	32S-40000 to 32S-7240147 Incl.
-19	62451-00		STRINGER ASSEMBLY - Hat section	1	
-20	62452-00		BRACKET - Stabilator pulley, left	1	
	62452-01		BRACKET - Stabilator pulley, right	1	
-21	62455-00		STRINGER ASSEMBLY - Hat section	1	
-22	62457-00		BRACKET - Stabilator pulley, left	1	
	62457-01		BRACKET - Stabilator pulley, right	1	
-23	62471-00		SPACER - Tail skid	2	
-24	62545-04		FITTING ASSEMBLY - Stabilator attachment	2	
-25	452 394		BEARING - (DW4K2)	1	

PIPER PARTS CATALOG

Figure and Index Number	Part Number	Code	NOMENCLATURE	No. Req.	SERIAL NUMBERS AFFECTED
15-26	66769-00		SKID ASSEMBLY -Tail	1	
-27	65112-00		BRACKET - Stringer, top	1	
-28	65114-00		STRINGER -Top, Sta. 156 to Sta. 191	1	
- 29	66974-00	E	STRINGER -Top, Sta. 191 to Sta. 228	1	
	79267-00	F	STRINGER -Top, Sta. 191 to Sta. 228	1	
-30	65494-00		PLATE ASSEMBLY - Aft fuselage closeout	1	
-31	68991-00	A	GUSSET -Aft lower cargo hatch	1	
-32	99813-02		DOUBLER - Antenna, forward	1	
	99805-03		DOUBLER - Antenna, aft	1	
-33	65343-00		CLIP - Antenna	2	
-34	63078-08		DISC - Closeout	2	
-35	402 897		BOLT - (NAS464P3A4)	8	
	407 564	W	WASHER - (AN960-10)	8	
	407 584	W	WASHER - (AN960-10L)	8	
	407 566	W	NUT - (MS21045-L3)	8	
-36	402 890		BOLT - (NAS464P3A5)	4	
	404 564	W	WASHER - (AN960-10)	4	
	407 584	W	WASHER - (AN960-10L)	4	
	404 556	W	NUT - (MS21045-L3)	4	
37	99615-00	C	COVER -Air conditioning exhaust louver, left	1	
	99615-01	C	COVER -Air conditioning exhaust louver, Right	1	
-38	99631-00	C	FILTER - Air conditioning exhaust	2	
-39	99496-00	C	BRACKET ASSEMBLY - Condenser door actuation	1	
-40	99561-00	C	BEARING ASSEMBLY - Condenser door actuation	2	
-41	99272-00	C	CHANNEL - Condenser door frame	2	
-42	99273-03	C	STIFFENER - Condenser door frame	1	
-43	99278-03	C	ZEE ASSEMBLY - Condenser door frame	1	
-44	99552-00	C	BRACKET ASSEMBLY - Condenser door bellcrank, left	1	
	99552-02	C	BRACKET ASSEMBLY - Condenser door bellcrank, right	1	
45	99568-00	C	BRACKET - Motor mount condenser actuator	1	
-46	99545500	C	BRACKET - Motor support	1	
-47	99555-00	C	BRACKET - Brace	1	
48	99487-00	C	BRACE - Condenser frame, left	1	
	99487-01	C	BRACE - Condenser frame, right	1	
-49	99488-00	C	GUSSET - Condenser frame, forward	2	
-50	99280-00	C	GUSSET - Condenser frame, aft, left		
	99280-01	C	GUSSET - Condenser frame, aft, right		
-51	76497-02	C	PANEL ASSEMBLY - Fairlead		
-52	99609-00	C	VENT ASSEMBLY - Evaporator		
-53	22482-00	C,W	SCOOP - Evaporator vent		
-54	99498-00	J	MOUNT -Closed limit switch		
55	553-266		STAB. Stop Bolts (NKN 428-3a7)	2	
-56	404 224		NUT - (AN 315-3)	2	

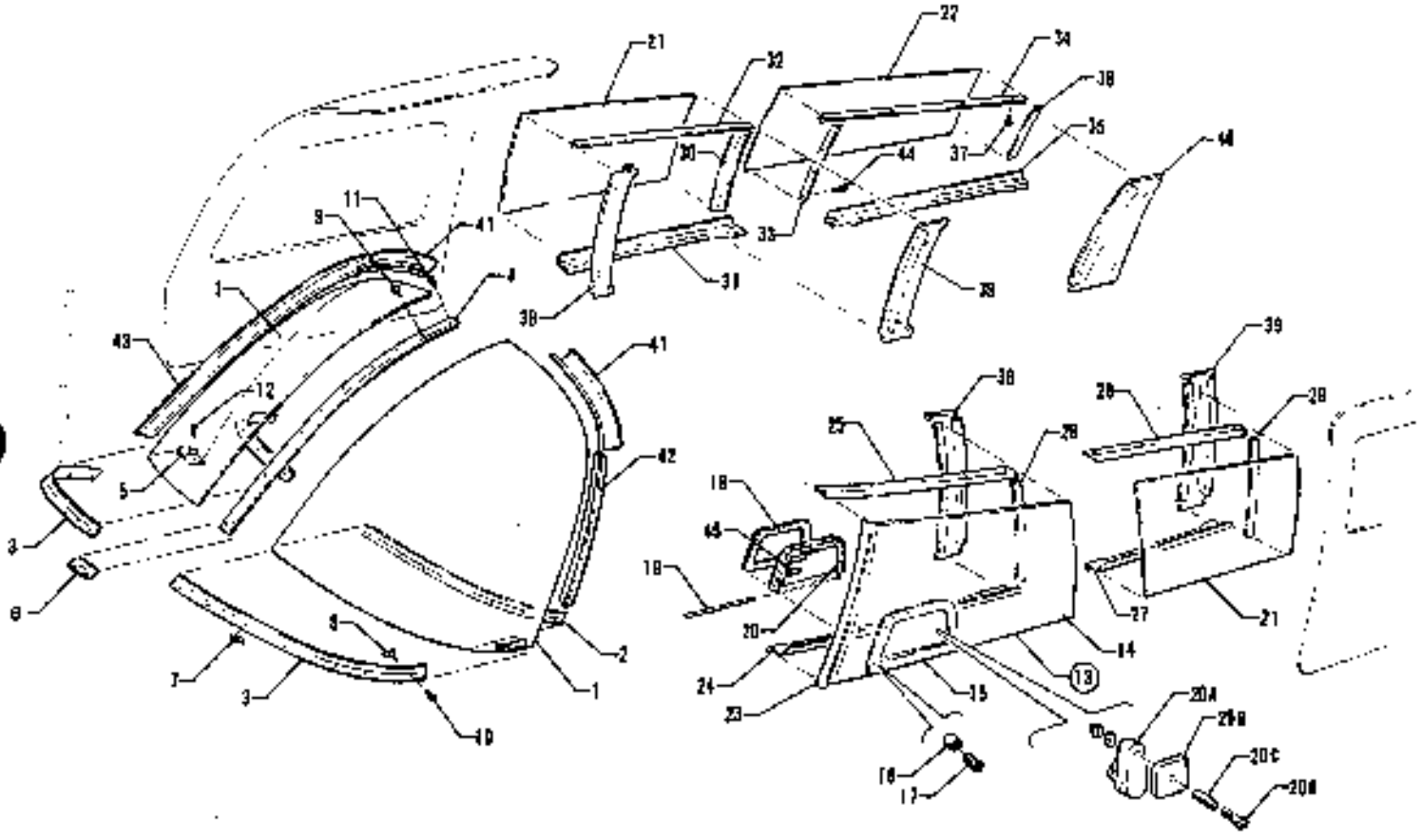

Figure 18. Enclosure Installation
(PA-32-260 - Serial Nos. 32-1 to 32-7200055 Inclusive)
(PA-32-300 - Serial Nos. 32-40000 to 32-7240147 Inclusive)

CODE EXPLANATIONS FOR FIGURE 16

A - Used on PA-32-260 with serial numbers 32-1 to 32-7200055 inclusive, and PA-32-300 with serial numbers 32-40000 to 32-7240147 inclusive.
B - Used if gray windshield and windows are installed.
C - Used on PA-32-260 with serial numbers 32-1 to 32-1110 inclusive, and PA-32-300 with serial numbers 32-40000 to 32-40415 inclusive.
D - Used on PA-32-260 with serial numbers 32-1111 and up, and PA-32-300 with serial numbers 32-40416 and up.
E - Used on PA-32-260 with serial numbers 32-1 to 32-1110 inclusive, and PA-32-300 with serial numbers 32-40000 to 32-40565 inclusive.
F - Used on PA-32-260 with serial numbers 32-1111 and up, and PA-32-300 with serial numbers 32-40566 and up.
G - Used on PA-32-260 with serial numbers 32-7100001 and up, and PA-32-300 with serial numbers 32-7140001 and up.
H - Used on PA-32-260 with serial numbers 32-667 and up, and PA-32-300 with serial numbers 32-40248 and up.
J - Used on PA-32-260 with serial numbers 32-1 to 32-666 inclusive, and PA-32-300 with serial numbers 32-40000 to 32-40247 inclusive.
K - Used on PA-32-260 with serial numbers 32-7200001 and up, and PA-32-300 with serial numbers 32-7240001 and up.
L - Used on PA-32-260 with serial numbers 32-566 to 32-1110 inclusive, and PA-32-300 with serial numbers 32-40000 to 32-40565 inclusive.
M - Used on PA-32-260 with serial numbers 32-1111 to 32-7100038 inclusive, and PA-32-300 with serial numbers 32-40566 to 32-7140068 inclusive.
N - Used on PA-32-260 with serial numbers 32-7200001 to 32-7200021 inclusive, and PA-32-300 with serial numbers 32-7240001 to 32-7240077 inclusive, and 32-7240079 to 32-7240081 inclusive.
O - Used on PA-32-260 with serial numbers 32-7200022 and up, and PA-32-300 with serial numbers 32-7240078 and 32-7240082 and up.
P - Used if shoulder harness has been installed.
Q - Used on PA-32-260 with serial numbers 32-1251 and up, and PA-32-300 with serial numbers 32-40851 and up.
R - Used on PA-32-260 with serial numbers 32-1111 to 32-1250 inclusive, and PA-32-300 with serial numbers 32-40668 to 32-40850 inclusive.
W - These parts must be ordered from Service Spares Department, Piper Aircraft, Lock Haven, Penna.

PIPER PARTS CATALOG

Figure and Index Number	Part Number	Code	NOMENCLATURE	No. Req.	SERIAL NUMBERS AFFECTED
16-	63070	C	DRAWING - Windshield Installation		
	69220	D	DRAWING - Windshield Installation		
	68291		DRAWING - Window Installation		
-1	63070-26		WINDSHIELD - Left	1	
	69220-08	B,G	WINDSHIELD - Left	1	
	63070-27		WINDSHIELD - Right	1	
	69220-09	B,G	WINDSHIELD - Right	1	
-2	63070-21	C	COLLAR - Inside, left	1	
	69220-02	D	COLLAR - Inside, left	1	
	63070-23	C	COLLAR - Inside, right	1	
	69220-03	D	COLLAR - Inside, right	1	
-3	63070-24	C	COLLAR - Outside, left	1	
	69220-04	D	COLLAR - Outside, left	1	
	63070-22	C	COLLAR - Outside, right	1	
	69220-05	D	COLLAR - Outside, right	1	
-4	63070-07		TRIM STRIP - Windshield, center	1	
-5	63077-00	E	ZEE - Windshield attachment, left	1	
	67552-00	F	RETAINER - Windshield	1	
	63076-00	E	ZEE - Windshield attachment, right	1	
	67553-00	F	RETAINER - Windshield	1	
-6	63070-14	C	PLATE - Windshield collar	1	
	69219-00	D	PLATE - Windshield collar	1	
-7	406 809		ANCHOR NUT - (NAS687A06K)	2	
-8	406 823		ANCHOR NUT - (NAS687A06K)	24	
	415 144		SCREW - (AN526-632R8)	24	
-9	415 450		SCREW - (AN526-832R10)	8	
-10	415 150		SCREW - (AN526-632R10)	2	
-11	415 477		SCREW - (AN526-832R7)	1	
-12	419 683		SCREW - 4 x 1/2 Oval Head, Type "A"	4	
	494 001		WASHER - (4 Finishing)	4	
-13	68304-00		WINDOW ASSEMBLY - Front, left	1	32-1 to 32-565 inclusive
	65746-02	J	WINDOW ASSEMBLY - Front, left	1	
	65826-02	H	WINDOW ASSEMBLY - Front, left	1	
	65826-04	B,G	WINDOW ASSEMBLY - Front, left	1	
	65826-08		* STRAP	1	
-14	68304-02		* WINDOW - Front, left	1	32-1 to 32-565 inclusive
	65750-00	J	* WINDOW - Front, left	1	
	65825-00	H	* WINDOW - Front, left	1	
	65825-02	B,G	* WINDOW - Front, left	1	
-15	23515-00		* FRAME ASSEMBLY - Storm window	1	32-1 to 32-565 inclusive
-16	18161-00		* BUSHING - Storm window frame	14	32-1 to 32-565 inclusive
-17	420 692		* RIVET - (AN426-A3-6)	14	32-1 to 32-565 inclusive
-18	13945-40		* STRIP - Rubber, storm window frame seal	1	32-1 to 32-565 inclusive
-19	21025-04		* PIN - Storm window hinge	1	32-1 to 32-565 inclusive
	63744-09		* PIN - Storm window hinge	1	32-566 and up
-20	21027-00		* WINDOW ASSEMBLY - Storm	1	32-1 to 32-565 inclusive
	65745-00	J	* WINDOW ASSEMBLY - Storm	1	
	65896-00	H	* WINDOW ASSEMBLY - Storm	1	
	65896-02	B,G	* WINDOW ASSEMBLY - Storm	1	
-20a	65742-00		* LATCH - Storm window	1	32-566 and up
-20b	65741-00		* SPACER - Storm window latch	1	32-566 and up
-20c	65003-10		* BUSHING - Storm window latch	1	32-566 and up
-20d	415 151		* SCREW - (AN526-632R12)	1	32-566 and up
	408 826		* WASHER - Shakeproof (3502-10-71)	1	32-566 and up
	477 696		* NUT - Dome (8061-NP)	1	32-566 and up

When ordering, always specify Part Number, Description, and Serial Number of Aircraft

PIPER PARTS CATALOG

Figure and Index Number	Part Number	Code	NOMENCLATURE	No. Req.	SERIAL NUMBERS AFFECTED
16-21	68306-00		WINDOW - Middle, left	1	
	68305-02	B,G	WINDOW - Middle, left	1	
	68305-01		WINDOW - Middle, right	1	
	68305-03	B,G	WINDOW - Middle, right	1	
-22	68306-00		WINDOW - Rear, right	1	
	68306-02	B,G	WINDOW - Rear, right	1	
-23	63071-02		ANGLE - Left front, front window	1	
-24	68292-00		ANGLE - Left bottom, front window	1	32-1 to 32-686 inclusive
	68292-02	L	ANGLE - Left bottom, front window	1	
	69463-00	F	ANGLE - Left bottom, front window	1	
-25	68293-00		ANGLE - Left top, front window	1	
-26	68294-00		ANGLE - Left rear, front window	1	
-27	68295-00		ANGLE - Left bottom, rear window	1	
-28	68296-00		ANGLE - Left top, rear window	1	
-29	68297-00		ANGLE - Left rear, rear window	1	
-30	68297-01		ANGLE - Right rear, middle window	1	
-31	68298-00		ANGLE - Right bottom, middle window	1	
-32	68299-00		ANGLE - Right top, middle window	1	
-33	68300-00		ANGLE - Right front, rear window	1	
-34	68301-00		ANGLE - Right top, rear window	1	
-35	68302-00		ANGLE - Right bottom, rear window	1	
-36	68303-00		ANGLE - Right rear, rear window	1	
-37	419 683	W	SCREW - (4 x 1/2 Type A)	40	
	494 001	W	WASHER - (4 Finishing)	40	
-38	68689-00	E	COVER - Window trim, left, sand	1	
	68689-02	F	COVER - Window trim, left, white	1	
	68731-00	E	COVER - Window trim, right, sand	1	
	68731-02	F	COVER - Window trim, right, white	1	
-39	68690-00	E	COVER - Window trim, left, sand	1	
	68690-02	M	COVER - Window trim, left, white	1	
	68690-03	N,P	COVER - Window trim, left, white	1	
	70016-00	O,P	COVER - Window trim, left, white	1	
	68691-00	E	COVER - Window trim, right, sand	1	
	68691-02	M	COVER - Window trim, right, white	1	
	68691-06	K,P	COVER - Window trim, right, white	1	
-40	68692-00	E	COVER - Window trim, right, sand	1	
	68692-02	F	COVER - Window trim, right, white	1	
-41	68688-00	E	COVER - Window trim, left, sand	1	
	68688-02	R	COVER - Window trim, left, white	1	
	68688-04	Q	COVER - Window trim, left, white	1	
	68688-01	E	COVER - Window trim, right, sand	1	
	68688-03	R	COVER - Window trim, right, white	1	
	68688-05	Q	COVER - Window trim, right, white	1	
-42	68732-00	E	COVER - Aft windshield bow, sand	1	
	68732-02	F	COVER - Aft windshield bow, white	1	
-43	63149-10	E	COVER - Windshield channel, left, sand	1	
	63149-14	F	COVER - Windshield channel, left, white	1	
	63149-11	E	COVER - Windshield channel, right, sand	1	
	63149-15	F	COVER - Windshield channel, right, white	1	
-44	419 876		SCREW - (4 x 3/8 Type A)	18	
-45	757 314		PLACARD - Storm window	1	

When ordering, always specify Part Number, Description and Serial Number of Aircraft

1D22 THRU 1D24

INTENTIONALLY LEFT BLANK

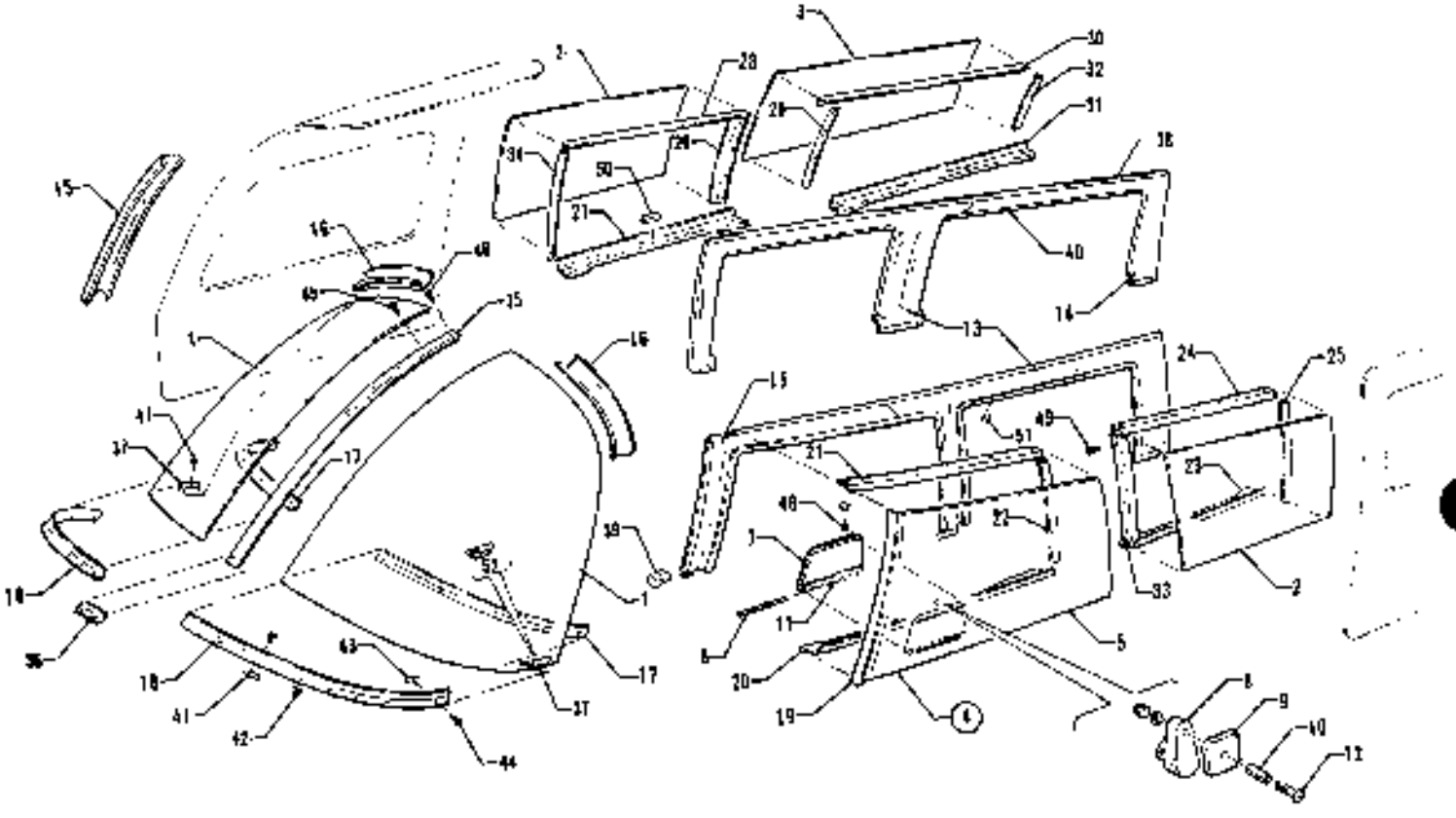

Figure 17. Enclosure Installation
(PA-32-260 - Serial Nos. 32-7300001 to 32-7300076 Inclusive)
(PA-32-300 - Serial Nos. 32-7340001 to 32-7340201 Inclusive)

CODE EXPLANATIONS FOR FIGURE 17

A - Used on PA-32-260 with serial numbers 32-7300001 to 32-7300078 inclusive, and PA-32-300 with serial numbers 32-7340001 to 32-7340201 inclusive.
B - Used if gray tinted windshield and windows are installed.
C - Used if shoulder harness is installed.
W - These parts must be ordered from Service Spares Department, Piper Aircraft, Lock Haven, Penna.

PIPER PARTS CATALOG

Figure and Index Number	Part Number	Code	NOMENCLATURE	No. Req.	SERIAL NUMBERS AFFECTED
17-	69646		DRAWING - Window Installation		
	69220		DRAWING - Windshield Installation		
-1	63070-26		WINDSHIELD - Left	1	
	69220-08	B	WINDSHIELD - Left	1	
	63070-27		WINDSHIELD - Right	1	
	69220-09	B	WINDSHIELD - Right	1	
-2	68305-00		WINDOW - Middle, left	1	
	68305-02	B	WINDOW - Middle, left	1	
	68305-01		WINDOW - Middle, right	1	
	68305-03	B	WINDOW - Middle, right	1	
-3	68306-00		WINDOW - Rear, right	1	
	68306-02	B	WINDOW - Rear, right	1	
-4	65826-02		WINDOW - Front, left	1	
	65826-04	B	WINDOW - Front, left	1	
	65826-08		* STRAP	1	
-5	65825-00		* WINDOW - Front, left	1	
	65825-02	B	* WINDOW - Front, left	1	
-6	63744-09		* PIN - Storm window hinge	1	
-7	65896-00		* WINDOW ASSEMBLY - Storm	1	
	65896-02	B	* WINDOW ASSEMBLY - Storm	1	
-8	65742-00		* LATCH - Storm window	1	
-9	65741-00		* SPACER - Storm window latch	1	
-10	65003-10		* BUSHING - Storm window latch	1	
-11	65782-00		* HINGE HALF - Storm window	1	
-12	415 522		* SCREW - (MS35206-232)	1	
	408 826		* WASHER - Shakeproof (3502-10-71)	1	
	407 041		* WASHER - Lock (MS35338-41)	1	
	477 696		* NUT - Dome (8061-NP)	1	
-13	78052-02		COVER - Window trim, center, left, white	1	
	78052-10	C	COVER ASSEMBLY - Window trim, center, left, white	1	
	78052-04		COVER - Window trim, center, right, white	1	
	78052-09	C	COVER ASSEMBLY - Window trim, center, right white	1	
-14	78052-03		COVER - Window trim, rear, right, white	1	
-15	99903-03		COVER - Window trim, front, left, white	1	
	99903-05		COVER - Window trim, front, right, white	1	
-16	68688-04		COVER - Windshield trim, left	1	
	68688-05		COVER - Windshield trim, right	1	
-17	69220-02		COLLAR - Inside, left	1	
	69220-03		COLLAR - Inside, right	1	
-18	69220-04		COLLAR - Outside, left	1	
	69220-05		COLLAR - Outside, right	1	
-19	63071-02		ANGLE - Left front, front widow	1	
-20	69645-00		ANGLE - Left bottom, front window	1	
-21	68293-00		ANGLE - Left top, front window	1	
-22	68294-00		ANGLE - Left rear, front window	1	
-23	69642-00		ANGLE - Left bottom, rear window	1	
-24	68296-00		ANGLE - Left top, rear window	1	
-25	68297-00		ANGLE - Left rear, rear window	1	
-26	68297-01		ANGLE - Right rear, middle window	1	
-27	69643-00		ANGLE - Right bottom, middle window	1	
-28	68299-00		ANGLE - Right top, middle window	1	
-29	68300-00		ANGLE - Right front, rear window	1	
-30	68301-00		ANGLE - Right top, rear window	1	
-31	69644-00		ANGLE - Right bottom, rear window	1	
-32	68303-00		ANGLE - Right rear, rear window	1	
-33	63071-17		ANGLE - Left front, middle window	1	
-34	63071-18		ANGLE - Right front, middle window	1	

When ordering, always specify Part Number, Description, and Serial Number of Aircraft

PIPER PARTS CATALOG

Figure and Index Number	Part Number	Code	NOMENCLATURE	No. Req.	SERIAL NUMBERS AFFECTED
17 35	63070-07		TRIM STRIP - Windshield, center	1	
-36	69219 00		PLATE - Windshield collar	1	
-37	79154-00		RETAINER - Windshield, left	1	
	79155-00		RETAINER - Windshield, right	1	
-38	78057 00		RETAINER - Window frame, extrusion	14	
-39	99990-00		CAP - Extrusion trim	2	
-40	99997-00		EXTRUSION - Vinyl	25	
41	406 809	W	ANCHOR NUT - (NAS687A06K)	2	
	415 520	W	SCREW - (MS35206-230)	2	
-42	406 842	W	ANCHOR NUT - (NAS684A06K)	2	
	415 520	W	SCREW - (MS35206-230)	2	
-43	406 823	W	ANCHOR NUT - (NAS686A06K)	18	
	415 520	W	SCREW - (MS35206-230)	18	
-44	415 521	W	SCREW - (MS35206-231)	2	
-45	415 536	W	SCREW - (MS35206-246)	8	
-46	415 544	W	SCREW (MS35206-244)	1	
-47	419 683	W	SCREW (4 x 1/2 Oval Head, Type "A")	4	
	494 001	W	WASHER - (#4 Finishing)	4	
-48	419 683	W	SCREW - (4 x 1/2 Type "A")	29	
	494 001	W	WASHER - (#4 Finishing)	AR	
-49	419 675		SCREW (4 x 3/8 Type "A")	39	
-50	99943-00		RETAINER - Window panel	8	
51	681 926		PLUG - (201-200201-00-0103)	9	
-52	99943 00		RETAINER - Windshield trim	2	

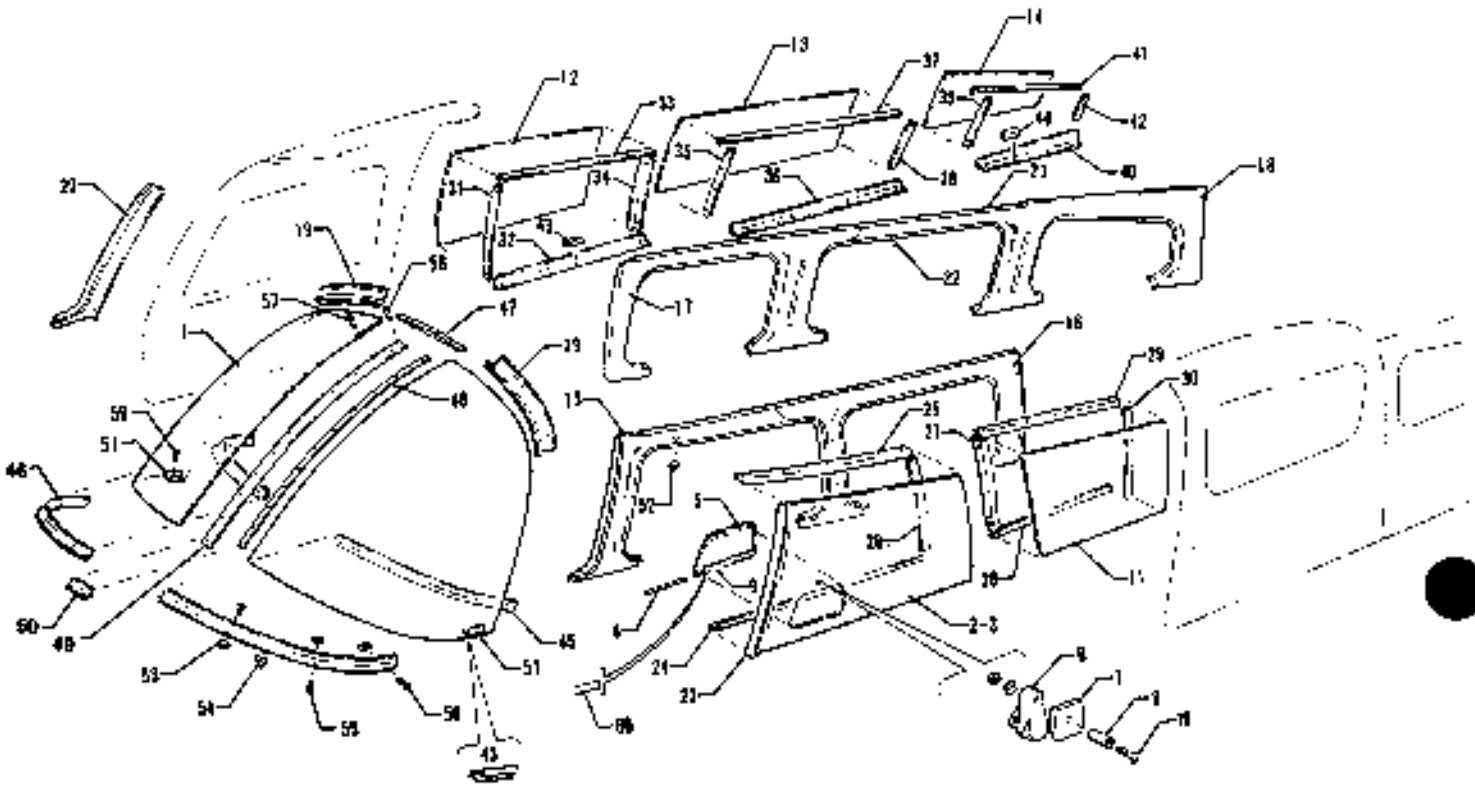

Figure 15. Enclosure Installation
(PA-32-260 - Serial Nos. 32-7400001 and up)
(PA-32-300 - Serial Nos. 32-7440001 and up)
(PA-32R-300 - Serial Nos. 32R-7680001 and up)

CODE EXPLANATIONS FOR FIGURE 18

A - Used on PA-32-260 with serial numbers 32-7400001 and up, PA-32-300 with serial numbers 32-7440001 and up, and PA-32R-300
B - Used if .250 thick sound reduction windshield is installed
C - Used on PA-32-260 with serial numbers 32-7400001 to 32-7500041 inclusive, and PA-32-300 with serial numbers 32-7400001 to 32-7540138 inclusive
D - Used on PA-32-260 with serial numbers 32-7500042 and up, PA-32-300 with serial numbers 32-7540139 and up, and PA-32R-300
E - Used if shoulder harness is installed
F - Used on PA-32-260 with serial numbers 32-7400001 to 32-7600001 inclusive, PA-32-300 with serial numbers 32-7440001 to 32-7640028 inclusive, and PA-32R-300 with serial numbers 32R-7680001 to 32R-7680013 inclusive
G - Used on PA-32-260 with serial numbers 32-7600002 and up, PA-32-300 with serial numbers 32-7640030 and up, and PA-32R-300 with serial numbers 32R-7680014 and up
H - Used on PA-32R-300 with serial numbers 32R-7680001 to 32R-7680072, 32R-7680074 to 32R-7680155, 32R-7680157 to 32R-7680538 inclusive
J - Used on PA-32-260 with serial numbers 32-7700002 and up, PA-32-300 with serial numbers 32-7740006 and up, and PA-32R-300 with serial numbers 32R-7780013 and up
K - Used on PA-32-260 with serial numbers 32-7400001 to 32-7700001 inclusive, PA-32-300 with serial numbers 32-7440001 to 32-7740004 inclusive, and PA-32R-300 with serial numbers 32R-7680001 to 32R-7780012 inclusive
L - Used on PA-32R-300 with serial numbers 32R-7680073, 32R-7680156, 32R-7780001 and up, and PA-32-300 with serial numbers 32-7940001 and up
W - These parts must be ordered from Service Spares Department, Piper Aircraft, Lock Haven, Penna

PIPER PARTS CATALOG

Figure and Index Number	Part Number	Code	NOMENCLATURE	No. Req.	SERIAL NUMBERS AFFECTED
18-	69220		DRAWING - Windshield Installation		
	78271	B	DRAWING - Windshield Installation		
	76363		DRAWING - Window Installation		
-1	69220-24		WINDSHIELD - Left, clear (.125 thick)	1	
	69220-22		WINDSHIELD - Left, tinted (.125 thick)	1	
	78271-03		WINDSHIELD - Left, clear (.250 thick)	1	
	78271-05		WINDSHIELD - Left, tinted (.250 thick)	1	
	69220-25		WINDSHIELD - Right, clear (.125 thick)	1	
	69220-23		WINDSHIELD - Right, tinted (.125 thick)	1	
	78271-04		WINDSHIELD - Right, clear (.250 thick)	1	
	78271-06		WINDSHIELD - Right, tinted (.250 thick)	1	
-2	69713-00	K	WINDOW ASSEMBLY - Front, left, clear	1	
	69713-02	K	WINDOW ASSEMBLY - Front, left, tinted	1	
	69713-03	J	WINDOW ASSEMBLY - Front, left, clear	1	
	69713-04	J	WINDOW ASSEMBLY - Front, left, tinted	1	
-3	69712-00	K	* WINDOW - Front, left, clear	1	
	69712-02	K	* WINDOW - Front, left, tinted	1	
	69712-03	J	* WINDOW - Front, left, clear	1	
	69712-04	J	* WINDOW - Front, left, tinted	1	
-4	63744-09		* PIN - Storm window hinge	1	
-5	65896-00		* WINDOW ASSEMBLY - Storm, clear	1	
	65896-02		* WINDOW ASSEMBLY - Storm, tinted	1	
-6	65742-00		* LATCH - Storm window	1	
-7	65741-00	C	* SPACER - Storm window latch	1	
-8	65003-10	C	* BUSHING - Storm window latch	1	
-9	65782-00		* HINGE HALF - Storm window	1	
-10	415 522	C	* SCREW - (MS35206-232)	1	
	79572-00	D	* SCREW - Special, storm window latch	1	
	408 832		* WASHER - Shakeproof (3502-10-71)	1	
	477 696		* NUT - Dome (8061-NP)	1	
-11	69704-00		WINDOW - Middle, left, clear (.080 thick)	1	
	69704-02		WINDOW - Middle, left, tinted (.080 thick)	1	
	69704-03		WINDOW - Middle, left, clear (.125 thick)	1	
	69704-04		WINDOW - Middle, left, tinted (.125 thick)	1	
-12	69705-00		WINDOW - Middle, right, clear (.080 thick)	1	
	69705-02		WINDOW - Middle, right, tinted, (.080 thick)	1	
	69705-03		WINDOW - Middle, right, clear (.125 thick)	1	
	69705-04		WINDOW - Middle, right, tinted (.125 thick)	1	
-13	68306-00		WINDOW - Middle, right, clear (.080 thick)	1	
	68306-02		WINDOW - Middle, right, tinted (.080 thick)	1	
	68306-03		WINDOW - Middle, right, clear (.125 thick)	1	
	68306-04		WINDOW - Middle, right, tinted (.125 thick)	1	
-14	69707-00		WINDOW - Rear, right, clear (.080 thick)	1	
	69707-02		WINDOW - Rear, right, tinted (.080 thick)	1	
	69707-03		WINDOW - Rear, right, clear (.125 thick)	1	
	69707-04		WINDOW - Rear, right, tinted (.125 thick)	1	
-15	78349-14	F	COVER ASSEMBLY - Window trim, forward, left	1	
	78349-17	G	COVER ASSEMBLY - Window trim, forward, left	1	
-16	78349-10		COVER ASSEMBLY - Window trim, middle, left	1	
	78349-04	E	COVER ASSEMBLY - Window trim, middle, left	1	
-17	78349-12		COVER ASSEMBLY - Window trim, middle, right	1	
	78349-08	E	COVER ASSEMBLY - Window trim, middle, right	1	
-18	78349-11		COVER ASSEMBLY - Window trim, rear, right	1	

PIPER PARTS CATALOG

Figure and Index Number	Part Number	Code	NOMENCLATURE	No. Req.	SERIAL NUMBERS AFFECTED
18-19	68688-04	F	COVER - Windshield trim, left	1	
	63148-22	G	COVER - Windshield trim, left	1	
	68688-05	F	COVER - Windshield trim, right	1	
	63148-23	G	COVER - Windshield trim, right	1	
-20	79171-02	F	COVER - Window trim, front, right	1	
	79171-13	G	COVER - Window trim, front, right	1	
-21	78057-00		RETAINER - Window frame, extrusion	10'	
-22	69997-00		EXTRUSION - Vinyl	AR	
-23	63071-02	F	ANGLE - Left front, front window	1	
	79562-00	G	ANGLE - Left front, front window	1	
-24	68709-00		RETAINER - Left bottom, front window	1	
-25	68293-02		ANGLE - Left top, front window	1	
-26	68700-00		RETAINER - Left rear, front window	1	
-27	68701-00		RETAINER - Left front, middle window	1	
-28	69642-00		ANGLE - Left bottom, middle window	1	
-29	68708-00		RETAINER - Left top, middle window	1	
-30	68297-00		ANGLE - Left rear, middle window	1	
-31	68701-01		RETAINER - Right front, middle window	1	
-32	69643-00		ANGLE - Right bottom, middle window	1	
-33	68710-00		RETAINER - Right top, middle window	1	
-34	68297-01		ANGLE - Right rear, middle window	1	
-35	68300-00		ANGLE - Right front, middle window	1	
-36	69644-00		ANGLE - Right bottom, middle window	1	
-37	68301-00		ANGLE - Right top, middle window	1	
-38	68303-00		ANGLE - Right rear, middle window	1	
-39	68717-00		RETAINER - Right front, aft window	1	
-40	68714-00		RETAINER - Right bottom, aft window	1	
-41	68716-00		RETAINER - Right top, aft window	1	
-42	68715-00		RETAINER - Right rear, aft window	1	
-43	69643-00		RETAINER - Window panel	10	
-44	78086-00		RETAINER - Aft window	2	
-46	69220-18		COLLAR - Inside, left	1	
	69220-19		COLLAR - Inside, right	1	
-46	69220-04		COLLAR - Outside, left	1	
	69220-05		COLLAR - Outside, right	1	
-47	78838-00	B	SPACER - Windshield	1	
-48	78296-11	B	SPACER	1	
-49	63070-07	F	TRIM STRIP - Windshield, center	1	
	79557-00	G	TRIM STRIP - Windshield, center	1	
-50	69219-00		PLATE - Windshield collar	1	
-51	79164-00		RETAINER - Windshield, left	1	
	79165-00		RETAINER - Windshield, right	1	
-52	531 929		PLUG - (207-200201-00-0103)	9	
-53	406 809	W	ANCHOR NUT - (NAS697A06K)	2	
	486 288		SCREW - (NAS601-8P)	2	
-54	406 642	W	ANCHOR NUT - (NAS684A06K)	2	
	486 288		SCREW - (NAS601-8P)	2	
-55	406 832	W	ANCHOR NUT - (NAS698A06K)	20	
	486 288		SCREW - (NAS601-8P)	20	
-56	415 521	W	SCREW - (MS35206-231)	2	
-57	415 536	W	SCREW - (MS35206-246)	8	
	415 537	B,W	SCREW - (MS35206-247)	8	
-58	415 544	W	SCREW - (MS35206-244)	1	
	415 535	B,W	SCREW - (MS35206-245)	1	
-59	419 663	W	SCREW - (4 x 1/2 oval head, type A)	4	
	494 001	W	WASHER - (4 Finishing)	4	
-60	98853-00	H	PLACARD - Storm window	1	
	69669-141	L	PLACARD - Storm window	1	

When ordering, always specify Part Number, Description and Serial Number of Aircraft

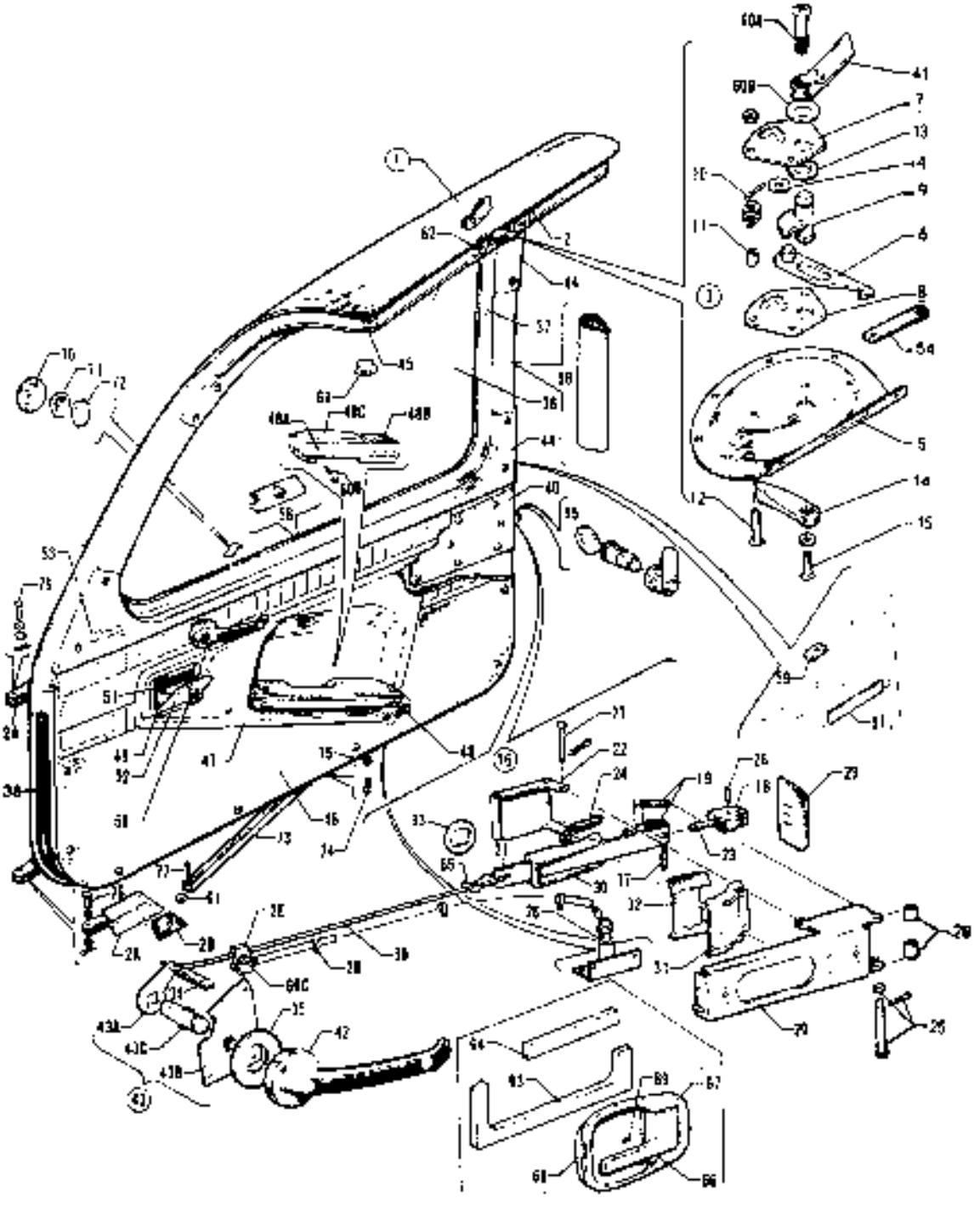

Figure 18 Forward Cabin Door
(PA-32-260 - Serial Nos. 32-1 to 32-7600001 inclusive)
(PA-32-300 - Serial Nos. 32-40000 to 32-7640029 inclusive)
(PA-32R-300 - Serial Nos. 32R-7680001 to 32R-7680013 inclusive)

CODE EXPLANATIONS FOR FIGURE 19

A - Used on PA-32-260 with serial numbers 32-1 to 32-7600001 incl., PA-32-300 with serial numbers 32-40000 to 32-7640029 incl., and PA-32R-300 with serial numbers 32R-7680001 to 32R-7680013 incl.
B - Used on PA-32-260 with serial numbers 32-1 to 32-1110 incl, and PA-32-300 with serial numbers 32-40000 to 32-40565 incl.
C - Used on PA-32-260 with serial numbers 32-1111 to 32-7300076 incl., and PA-32-300 with serial numbers 32-40566 to 32-7340201 incl.
D - Used on PA-32-260 with serial numbers 32-1111 to 32-1250 incl., and PA-32-300 with serial numbers 32-40566 to 32-40850 incl.
E - Used on PA-32-260 with serial numbers 32-1251 to 32-1320 incl., and PA-32-300 with serial numbers 32-40851 to 32-41018 incl.
F - Used on PA-32-260 with serial numbers 32-1 to 32-1187 incl., 32-1189 to 32-1190 incl., and PA-32-300 with serial numbers 32-40000 to 32-40762 incl., 32-40764 to 32-40768 incl.
G - Used on PA-32-260 with serial numbers 32-1188, 32-1191 to 32-7300076 incl., and PA-32-300 with serial numbers 32-40763, 32-40769 to 32-7340201 incl.
H - Used on PA-32-260 with serial numbers 32-7100001 to 32-7100038 incl., and PA-32-300 with serial numbers 32-7140001 to 32-7140086 incl.
J - Used on PA-32-260 with serial numbers 32-7200001 to 32-7200055 incl., and PA-32-300 with serial numbers 32-7240001 to 32-7240147 incl.
K - Used on PA-32-260 with serial numbers 32-7300001 to 32-7300076 incl., and PA-32-300 with serial numbers 32-7340001 to 32-7340201 incl.
L - Used on PA-32-260 with serial numbers 32-7400001 and up, PA-32-300 with serial numbers 32-7440001 and up, and PA-32R-300.
M - Used on PA-32-260 with serial numbers 32-1111 and up, PA-32-300 with serial numbers 32-40566 and up, and PA-32R-300.
N - Used on PA-32-260 with serial numbers 32-7300006 and up, PA-32-300 with serial numbers 32-7340039 and up, and PA-32R-300.
O - Used on PA-32-260 with serial numbers 32-1111 to 32-7300005 incl., and PA-32-300 with serial numbers 32-40566 to 32-7340038 incl. if lower door latch has been installed.
P - Used on PA-32-260 with serial numbers 32-7100001 and up, PA-32-300 with serial numbers 32-7140001 and up, and PA-32R-300.
Q - Used on PA-32-260 with serial numbers 32-1 to 32-7200055 incl., and PA-32-300 with serial numbers 32-40000 to 32-7240147 incl.
R - Used on PA-32-260 with serial numbers 32-1111 to 32-7200055 incl., and PA-32-300 with serial numbers 32-40566 to 32-7240147 incl.
S - Used on PA-32-260 with serial numbers 32-7400001 to 32-7400061 incl., and PA-32-300 with serial numbers 32-7440001 to 32-7440182 incl.
T - Used on PA-32S-300 Seaplane Model only.
U - Used on PA-32-260 with serial numbers 32-1251 to 32-7400061 incl., and PA-32-300 with serial numbers 32-40851 to 32-7440182 incl.
V - If matching switch and door locks are desired, order Kit 470 729.
X - Used on PA-32-260 with serial numbers 32-7300001 and up, PA-32-300 with serial numbers 32-7340001 and up, and PA-32R-300.
Y - Complete door assembly not available. Order component parts.
Z - When ordering, specify color red, blue, brown or gold.
AA - Used on PA-32-260 with serial numbers 32-1251 and up, PA-32-300 with serial numbers 32-40851 and up, and PA-32R-300.
AB - Used on PA-32-260 with serial numbers 32-878 to 32-1250 incl., and PA-32-300 with serial numbers 32-40266 to 32-40850 incl.
AC - When ordering, specify color red, blue/green, gold, black or green.
AD - Install Forward Cabin Door Reinforcement Kit 760-729 if the cabin door top latch does not properly engage, the top aft area of the cabin door does not seal properly, or if a crack is found in the top hinge area. Reference Piper Service Letter 620, applicable to PA-32-260 with serial numbers 32-03, 32-04, 32-1 to 32-7300022 incl., and PA-32-300 with serial numbers 32-15, 32-21, 32-40000 to 32-7340081 incl.

PIPER PARTS CATALOG

Figure and Index Number	Part Number	Code	NOMENCLATURE	No. Req.	SERIAL NUMBERS AFFECTED
19-1	68185-00	B,Y	DOOR ASSEMBLY - Cabin, forward (complete)	1	
	69327-00	D,Y	DOOR ASSEMBLY - Cabin, forward (complete)	1	
	69327-02	E,Y	DOOR ASSEMBLY - Cabin, forward (complete)	1	
	69327-03	H,Y	DOOR ASSEMBLY - Cabin, forward (complete)	1	
	69327-04	J,Y	DOOR ASSEMBLY - Cabin, forward (complete)	1	
	78082-03	K,Y	DOOR ASSEMBLY - Cabin, forward (complete)	1	
	79209-04	L,Y	DOOR ASSEMBLY - Cabin, forward (complete)	1	
-2	63047-12	B	* DOOR ASSEMBLY - Cabin	1	
	66652-00	C	* DOOR ASSEMBLY - Cabin	1	
	66652-12	L	* DOOR ASSEMBLY - Cabin	1	
-2a	63050-00	F,AD	* * HINGE - Cabin door assembly, top	1	
	66913-00	G,AD	* * HINGE - Cabin door assembly, top	1	
	66913-04	L,AD	* * HINGE - Cabin door assembly,top	1	
	63051-00	F,AD	* * HINGE - Cabin door assembly,bottom	1	
	66914-00	G,AD	* * HINGE - Cabin door assembly,bottom	1	
	66914-03	L,AD	* * HINGE - Cabin door assembly,bottom	1	
-2b	66915-00	G	* * DOUBLER ASSEMBLY - Floating, top	1	
	66916-00	G	* * DOUBLER ASSEMBLY - Floating, bottom	1	
-2c	96863-00	N,O	* * ACTUATOR ASSEMBLY - Lower door latch	1	
-2d	454 887	N,O	* * CLAMP - (PS10017-1-3)	3	
-2e	96864-00	N,O	* CLAMP - Lower door latch	2	
-3	63034-00	B,AD	* LATCH ASSEMBLY - Door, auxiliary	1	
	63034-02	M,AD	* LATCH ASSEMBLY - Door, auxiliary	1	
-4	62833-06		* * WASHER	1	
-5	68180-00		* * PAN - Door latch	1	
-6	63036-00		* * HOOK ASSEMBLY - Door latch	1	
-7	68179-00		* * PLATE - Door latch	1	
-8	68179-02		* * PLATE - Door latch	1	
-9	63042-00		* * CAM - Door latch	1	
-10	63045-00		* * SPRING - Door latch	1	
-11	63900-50		* * BUSHING	3	
-12	414 769		* * SCREW - (MS24693-S53)	3	
	404 529		* * NUT - (MS21042-08)	3	
-13	690 631		* * WASHER - (NAS1149F0863P)	1	
-14	63039-02	B	* * HANDLE - Door, auxiliary	1	
	63039-00	M	* * HANDLE - Door, auxiliary	1	
-15	415 378		* * SCREW - (MS51957-45) Door handle	1	
	690 619		* * WASHER - (NAS1149F0532P) Door handle	1	
-16	68188-00	AD	* LATCH ASSEMBLY - Door	1	
-17	14627-03		* * PIN - Door latch	1	
-18	69224-00		* * TONGUE ASSEMBLY - Door latch	1	
-19	14635-02		* * SPRING	2	
-20	79434-00		* * HOUSING ASSEMBLY - Door latch	1	
-21	66654-00		* * PLATE ASSEMBLY	1	
-22	79594-000		* * PLATE	1	
-23	81262-68		* * LINK	1	
-24	83302-43		* * SPRING	1	
-25	424 051		* * COTTER PIN - (MS24665-132)	1	
	424 163		* * PIN - (AN392-53)	1	
	690 640		* * WASHER - (NAS1149FN632P)	1	
-26	681 145		* * ROLL PIN - (MS16562-34)	1	
-27	424 162		* * PIN - (AN392-49)	1	
	424 051		* * COTTER PIN - (MS24665-132)	1	
	690 640		* * WASHER - (NAS1149FN632P)	1	
-28	14843-90		* * BUSHING	2	
-29	21478-00		* * SEAL	1	
-30	66641-00		* * PLATE - Door latch stop	1	
-31	21843-00		* * PLATE - Seal support	1	
-32	21844-00		* * SEAL	1	

When ordering, always specify Part Number, Description, and Serial Number of Aircraft

PIPER PARTS CATALOG

Figure and Index Number	Part Number	Code	NOMENCLATURE	No. Req.	SERIAL NUMBERS AFFECTED
19-33	21176 00	W	* SPACER	2	
-34	42891-00	B,W	* SPRING	1	
-35	62833 20	B	* WASHER	1	
-36	63006-06		* WINDOW - Door, clear (.080 thick)	1	
	79040-00	L	* WINDOW - Door, clear (.125 thick)	1	
	66848-04	P	* WINDOW - Door, tinted (.080 thick)	1	
	79040-02	L	* WINDOW - Door, tinted (.125 thick)	1	
-37	63006-07		* ANGLE - Door window	1	
-38	19083-02	W	* MOULDING - Cabin door (quarter-round type)	13'	
	199 139		* MOULDING - Cabin door (bulb type)	13'	
-39	63007-00	B	* ROD - Door handle	1	
	99783-00	M	* ROD - Door handle	1	
-40	63012-00		* PLATE - Door latch trim	1	
-41	63039-00		* HANDLE - Door, auxiliary	1	
-42	464 031	B	* HANDLE - (1H-287)	1	
-43	63055-07	B	* HANDLE ASSEMBLY - Door	1	
-43a	20747-00	B,W	* * LINK - Door latch	1	
-43b	65687-00	B	* * PLATE ASSEMBLY - Door latch	1	
43c	20743-00	B,W	* * SHAFT - Door handle	1	
-44	63151-02	Q	* COVER - Door trim, window, bottom	1	
	63151-03	Q	* COVER - Door trim, window, top	1	
	78082-04	K	* COVER - Door trim, window (complete)	1	
	79209-11	L	* COVER - Door trim, window (complete)	1	
-45	63187-11	B	* PANEL - Door, top, sand	1	
	63187-12	R	* PANEL - Door, top, white	1	
-46	68469-02	B	* PANEL - Door, bottom, red	1	
	69417-02	D	* PANEL - Door, bottom, red	1	
	69583-02	E	* PANEL - Door, bottom, red	1	
	99238-02	H	* PANEL - Door, bottom, red	1	
	99238-08	J	* PANEL - Door, bottom, red	1	
	680 450	K	* PANEL - Door, bottom, red	1	
	579 783	L	* PANEL - Door, bottom, red	1	
	68469-03	B	* PANEL - Door, bottom, brown	1	
	69417-03	D	* PANEL - Door, bottom, brown	1	
	69583-06	E	* PANEL - Door, bottom, green	1	
	99238-07	H	* PANEL - Door, bottom, green	1	
	99238-13	J	* PANEL - Door, bottom, green	1	
	680 466	K	* PANEL - Door, bottom, green	1	
	579 778	L	* PANEL - Door, bottom, green	1	
	68469-04	B	* PANEL - Door, bottom, blue	1	
	69417-04	D	* PANEL - Door, bottom, blue	1	
	69583-03	E	* PANEL - Door, bottom, blue	1	
	99238-03	H	* PANEL - Door, bottom, blue	1	
	99238-09	J	* PANEL - Door, bottom, blue/green	1	
	680 451	K	* PANEL - Door, bottom, blue/green	1	
	579 782	L	* PANEL - Door, bottom, blue/green	1	
	68469-05	B	* PANEL - Door, bottom, beige	1	
	69417-06	D	* PANEL - Door, bottom, beige	1	
	69583-04	E	* PANEL - Door, bottom, beige	1	
	99238-04	H	* PANEL - Door, bottom, beige	1	
	99238-10	J	* PANEL - Door, bottom, gold	1	
	680 452	K	* PANEL - Door, bottom, gold	1	
	579 781	L	* PANEL - Door, bottom, gold	1	

PIPER PARTS CATALOG

Figure and Index Number	Part Number	Code	NOMENCLATURE	No. Req.	SERIAL NUMBERS AFFECTED
19-48	69417-06	D	* PANEL - Door, bottom, black	1	
	69563-05	E	* PANEL - Door, bottom, black	1	
	99238-06	H	* PANEL - Door, bottom, black	1	
	99239-11	J	* PANEL - Door, bottom, black	1	
	580 453	K	* PANEL - Door, bottom, black	1	
	579 780	L	* PANEL - Door, bottom, black	1	
	69583 07	E	* PANEL - Door, bottom, white	1	
	99238-06	H	* PANEL - Door, bottom, white	1	
	99238-12	J	* PANEL - Door, bottom, white	1	
	580 454	K	* PANEL - Door, bottom, white	1	
	579 779	S	* PANEL - Door, bottom, white	1	
-47	68484 01	B	* PAN Armrest	1	
-48	68492-05	B	* PAD - Grip armrest, red	1	
	68492-09	B	* PAD - Grip armrest, brown	1	
	68492-13	B	* PAD - Grip armrest, blue	1	
	68469-05	B	* PAD - Grip armrest, beige	1	
-48a	66710-17	M	* HOUSING ASSEMBLY - Armrest	1	
-48b	783 003	M	* * BOX ASSEMBLY - Ash tray (5-26-AR-C)	1	
-48c	66710-44	M,AC	* PAD Armrest	1	
	66710-21	D	* PAD - Armrest, brown	1	
	66710-25	U	* PAD - Armrest, white	1	
-49	463 141	B,W	* BOX - Ash (947478)	1	
-50	65286-05	B	* KNOB - Ash box, red	1	
	65286-06	B	* KNOB - Ash box, blue	1	
	65286-07	B	* KNOB - Ash box, brown	1	
	65286-08	B	* KNOB - Ash box, tan	1	
-51	464 385	B	* RETAINER - Ash box	1	
-52	65304-00	B,Z	* PANEL - Ash box	1	
-53	65356-00	B	* PLACARD - Door holder	1	
54	68555-02	B	* PLACARD - Door latch	1	
	68555 05	M	* PLACARD - Door latch	1	
-55	752 301	V,W	* LOCK ASSEMBLY - Forward cabin door (10-377028)	1	
-56	99843-00	X	* RETAINER - Side panel	2	
-57	78057-00	K	* RETAINER - Window frame extrusion	1'	
-58	99997-00	X	* EXTRUSION - Vinyl	7'	
-59	99990-00	K	* CAP - Extrusion trim	2	
-60	581 928	X	* PLUG - (207-200201-00-0103)	1	
-60a	415 535	W	* SCREW - (MS35206-245)	1	
	407 586	W	* WASHER - (AN960-516L)	1	
-60b	62833-21		* WASHER - Neoprene	1	
	407 680		* WASHER - (ANB60C-816)	1	
-60c	401 266	W	* BOLT - (AN3-5A)	1	
	407 564	W	* WASHER - (AN960-10)	1	
	404 887	W	* NUT - (MS20365-1032C)	1	
-60d	419 594	M	* SCREW - (AN530-10R36)	2	
-61	63020-02		BUSHING - Door holder	1	
	63900-73	T	BUSHING - Door holder	1	32S-40000 to 32S-7240147 incl
-62	463 867	AB	BUMPER - Door (Y-3020) Beige	2	
	463 856	AA	BUMPER - Door (SJ-5003) White	2	
-63	66647-00	M	SPACER - Door handle	1	
-64	66648-00	M	SPACER - Door handle	1	
-65	587 221	M	SPRING - Pull rod (113-837-199)	1	
-66	464 046	M	HANDLE - Door, right (113-837-020)	1	

When ordering, always specify Part Number, Description and Serial Number of Aircraft

PIPER PARTS CATALOG

Figure and Index Number	Part Number	Code	NOMENCLATURE	No. Req.	SERIAL NUMBERS AFFECTED
19-67	468 441	M	ESCUTCHEON - Door handle (113-837-239B)	1	
-68	581 489	M	PLATE - Trim, black (311-837-247)	1	
-69*	486 160	M	SCREW - (NOO-014-2161)	1	
	494 141	M	WASHER - (NOO-012-1131)	1	
-70	69209-00	T	RETAINER - Door holding socket	1	32S-40000 to 32S-7240147 incl
-71	487 147	T	SOCKET - Door holding (XX16206)	1	32S-40000 to 32S-7240147 incl
72	581 177	T	PLATE - Clinch (BS-18506)	1	32S-40000 to 32S-7240147 incl
-73	65727 00		HOLDER ASSEMBLY Door	1	
-74	400 669		BOLT - Clevis (AN23-9A)	1	
-75	63020-02		BUSHING - Door holder	1	
	63800-73	T	BUSHING - Door holder	1	32S-40000 to 32S-7240147 incl
76	424 204		PIN - (MS20392-3C13)	2	
	407 595	W	WASHER - (AN960-416L)	4	
	424 051	W	COTTER PIN - (MS24665-132)	2	
-77	400 862		BOLT - Clevis (AN23-10A)	1	

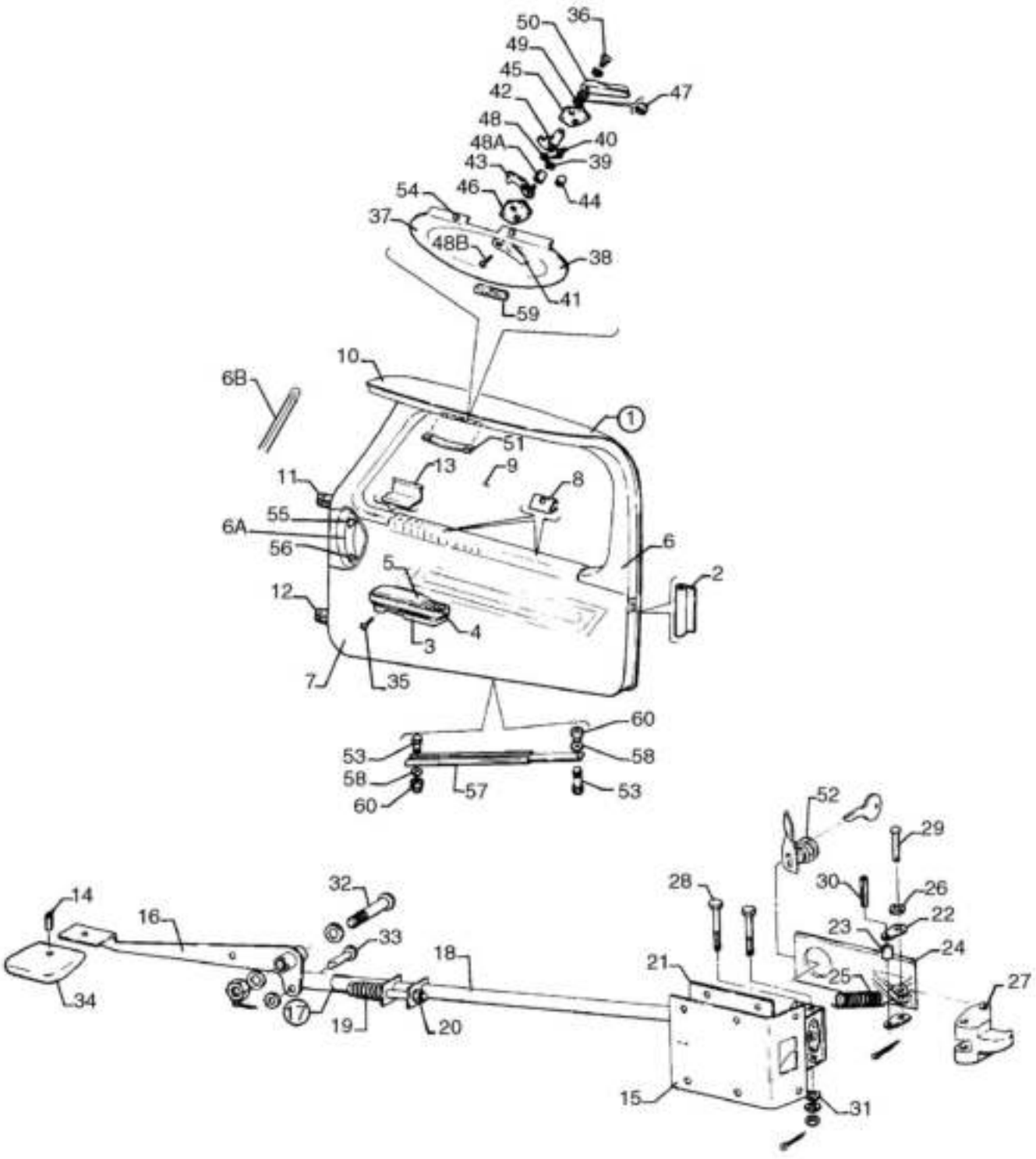

Figure 19A. Forward Cabin Door

CODE EXPLANATIONS FOR FIGURE 19A

A - Used on PA-32-260 with serial numbers 32-7600002 and up, PA-32-300 with serial numbers 32-7640030 and up, and PA-32R-300 with serial numbers 32R-7680014 and up.
B - Complete Door Assembly not available. Order component parts.
C - When ordering, specify color red, blue/green, gold, black or green.
D - When ordering, specify door latch pan color red, blue/green, gold, black, green or bark. Specify color “bark I” for PA-32-260 with serial numbers 32-7700001 to 32-7700013 inclusive, PA-32-300 with serial numbers 32-7740001 to 32-7740044 inclusive, and PA-32R-300 with serial numbers 32R-7780001 to 32R-7780214 inclusive. Specify color “bark II” for PA-32-260 with serial numbers 32-7700014 and up, PA-32-300 with serial numbers 32-7740045 and up, and PA-32R-300 with serial numbers 32R-7780215 and up.
E - If matching ignition switch and door locks are desired, order Kit 87329-04.
F - Used on PA-32-260 with serial numbers 32-7600002 to 32-7600033 inclusive, PA-32-300 with serial numbers 32-7640030 to 32-7640142 inclusive, and PA-32R-300 with serial numbers 32R-7680014 to 32R-7680538 inclusive.
G - Used on PA-32-260 with serial numbers 32-7700001 and up, PA-32-300 with serial numbers 32-7740001 and up, and PA-32R-300 with serial numbers 32R-7780001 and up.
H - Used on PA-32-260 with serial numbers 32-7700001 to 32-7700023 inclusive, PA-32-300 with serial numbers 32-7740001 to 32-7740113 inclusive, and PA-32R-300 with serial numbers 32R-7780001 to 32R-7780549 inclusive.
J - Used on PA-32-260 with serial numbers 32-7800001 and up, PA-32-300 with serial numbers 32-7840001 and up, and PA-32R-300 with serial numbers 32R-7880001 and up.
K - Used on PA-32-260 with serial numbers 32-7800001 and up, PA-32-300 with serial numbers 32-7840001 to 32-7940149 inclusive, and PA-32R-300 with serial numbers 32R-7880001 and up.
L - Used on PA-32-300 only.
M - Used with door latch hook assembly that has a 3/8 O.D. welded stud.
N - Used with door latch hook assembly that has a 1/4 O.D. welded stud and 3/8 O.D. removable roller.

PIPER PARTS CATALOG

Figure and Index Number	Part Number	Code	NOMENCLATURE	No. Req.	SERIAL NUMBERS AFFECTED
19A-	79546		DRAWING - Doors Installation		
-1	79545-04	B	DOOR ASSEMBLY - Complete (less lock assembly)	1	
-2	189 139		* MOULDING - Cabin door (bulb type)	13	
-3	66710-17		* HOUSING ASSEMBLY - Armrest	1	
-4	763 003		* * BOX ASSEMBLY - Ash tray (S-25-AR-C)	1	
-5	66710-44	C,F	* PAD - Armrest	1	
	580 731	G	* PAD - Armrest, camel	1	
	579 507	J	* PAD - Armrest, olivetone	1	
	579 508	K	* PAD - Armrest, midnight blue	1	
	579 474	L	* PAD - Armrest, dark blue	1	32-7940150 and up
	579 509	J	* PAD - Armrest, black	1	
	579 510	J	* PAD - Armrest, tan	1	
-6	79542-14	D,F	* COVER ASSEMBLY - Cabin door upper, white	1	
	79542-15	D,G	* COVER ASSEMBLY - Cabin door upper, white	1	
-6a	79542-05	D	* PAN - Door latch	1	
-6b	99997-00		* EXTRUSION - Vinyl	7	
-7	79544-02	C,F	* PANEL ASSEMBLY - Cabin door trim	1	
	580 709	H	* PANEL ASSEMBLY - Cabin door trim	1	
	579 409	J	* PANEL ASSEMBLY - Cabin door trim, white/camel/black	1	
	579 555	J	* PANEL ASSEMBLY - Cabin door trim, olivetone	1	
	579 556	K	* PANEL ASSEMBLY - Cabin door trim, midnight blue	1	
	579 315	L	* PANEL ASSEMBLY - Cabin door trim, dark blue	1	32-7940150 and up
	579 557	J	* PANEL ASSEMBLY - Cabin door trim, raspberry/black	1	
	579 558	J	* PANEL ASSEMBLY - Cabin door trim, tan/seal	1	
-8	99943-00		* RETAINER - Side panel	2	
-9	79475-05		* WINDOW - Cabin door (.080 thick) clear	1	
	79475-55		* WINDOW - Cabin door (.080 thick) tinted	1	
	79475-56		* WINDOW - Cabin door (.125 thick) clear	1	
	79475-57		* WINDOW - Cabin door (.125 thick) tinted	1	
-10	79475-48		* DOOR ASSEMBLY - Cabin (less window and lock assembly)	1	
-11	79475-07		* * HINGE - Cabin door, upper	1	
-12	79475-08		* * HINGE - Cabin door, lower	1	
-13	79475-09		* * RETAINER - Window	1	
-14	419 967		* * SCREW - Set (1/4-28 x 1/4" L.)	1	
	486 145		* * SCREW - Set (1/4-20 x 1/4" L.)	1	
-15	79515-35		* * COVER - Cabin door latch	1	
-16	79515-13		* * HANDLE ASSEMBLY - Cabin door	1	
-17	79515-03		* * LATCH ASSEMBLY - Door	1	
	82695-123		* * * BUSHING - Spacer sleeve, tabulated	1	
-18	79515-05		* * * TUBE ASSEMBLY- Door latch	1	
-19	587 398		* * * * SPRING - Door latch tube (PS10087-2-1)	1	
-20	400 113		* * * * BOLT - (AN4-20)	1	
	407 565		* * * * WASHER - (AN960-416)	3	
	404 101		* * * * NUT - (AN310-4)	1	
	424 051		* * * * COTTER PIN - (MS24665-132)	1	
-21	79515-07		* * * BOX ASSEMBLY - Door latch	1	
-22	79515-08		* * * LINK - Door latch mechanism	2	
-23	79515-15		* * * BUSHING - Door latch mechanism	1	
-24	79530-02		* * * HANDLE - Door latch mechanism	1	
-25	587 381		* * * SPRING - (E0240-037-1750S)	2	
-26	690 668		* * * WASHER - (NAS1149FN432P)	4	
-27	79532-02		* * * LATCH - Cabin door	1	
-28	400 665		* * * BOLT - (AN21-31)	2	
	407 562		* * * WASHER - (AN960-6)	2	
	404 391		* * * NUT - (AN320-1)	2	
	424 041		* * * COTTER PIN - (MS24665-5)	2	

PIPER PARTS CATALOG

Figure and Index Number	Part Number	Code	NOMENCLATURE	No. Req.	SERIAL NUMBERS AFFECTED
19A-29	424 148		* * * PIN - (MS20392-1C23 PIN)	1	
	424 026		* * * COTTER PIN - (MS24665-65)	1	
	82695-123		* * * SPACER	1	
-30	480 800		* * * PIN - Spring (MS9048-111)	1	
-31	407 582		* * * WASHER - (AN960-6L)	2	
-32	400 668		* * * BOLT - (AN23-26)	1	
	407 584		* * * WASHER - (AN960-10L)	4	
	404 392		* * * NUT - (AN320-3)	1	
	424 051		* * * COTTER PIN - (MS24665-132)	1	
-33	424 141		* * * PIN - (MS20392-1C-9)	1	
	407 562		* * * WASHER - (AN960-6)	2	
	424 041		* * * COTTER PIN - (MS24665-5)	1	
-34	79647-02		* * KNOB - Door handle	1	
-35	419 594		* SCREW - (AN530-10R36)	2	
-36	519 853		* SCREW - (MS24622-43)	1	
	62833-107		* WASHER - Teflon	1	
	407 680		* WASHER - (AN960C-816)	1	
-37	36598-02		* LATCH ASSEMBLY - Door, auxiliary	1	
-38	79475-34		* * PAN - Door latch	1	
-39	62833-06		* * WASHER	1	
-40	63045-00		* * SPRING - Door latch	1	
-41	36590-02		* * HANDLE - Door, auxiliary	1	
-42	63042-03		* * CAM - Door latch	1	
-43	63036-03		* * HOOK ASSEMBLY - Door latch (with 3/8 O.D. welded stud)	1	
	63036-04		* * HOOK ASSEMBLY - Door latch (with 1/4 O.D. welded stud)	1	
-44	63900-50		* * BUSHING	3	
-45	68179-00	M	* * PLATE - Door latch	1	
	68179-07	N	* * PLATE - Door latch	1	
-46	68179-02	M	* * PLATE - Door latch	1	
	68179-08	N	* * PLATE - Door latch	1	
-47	63913-76		* * BUSHING	1	
-48	407 680		* * WASHER - (AN960C816)	1	
-48a	36572-03		* * ROLLER - Door latch (3/8 O.D.)	1	
-48b	519 853		* * SCREW - (MS24622-43)	1	
	62833-107		* * WASHER - Teflon	1	
	407 586		* * WASHER - (AN960-516L)	1	
-49	62833-21		* WASHER - Neoprene	1	
-50	63039-00		* HANDLE - Door, auxiliary latch	1	
-51	464 412		* HANDLE - Door assist (PS10091-1)	1	
-52	87329-07	E	LOCK ASSEMBLY - Cabin door	1	
-53	400 862		BOLT - (AN23-10A)	2	
-54	453 856		BUMPER - (SJ5003)	2	
-55	69669-117		PLACARD - Open	1	
-56	69669-118		PLACARD - Latch	1	
-57	65727-00		DOOR HOLDER ASSEMBLY	1	
-58	62833-39		WASHER - Door holder (neoprene)	2	
-59	68555-05		PLACARD - Door lock	1	
-60	63020-02		BUSHING - Door holder	2	

When ordering, always specify Part Number, Description, and Serial Number of Aircraft

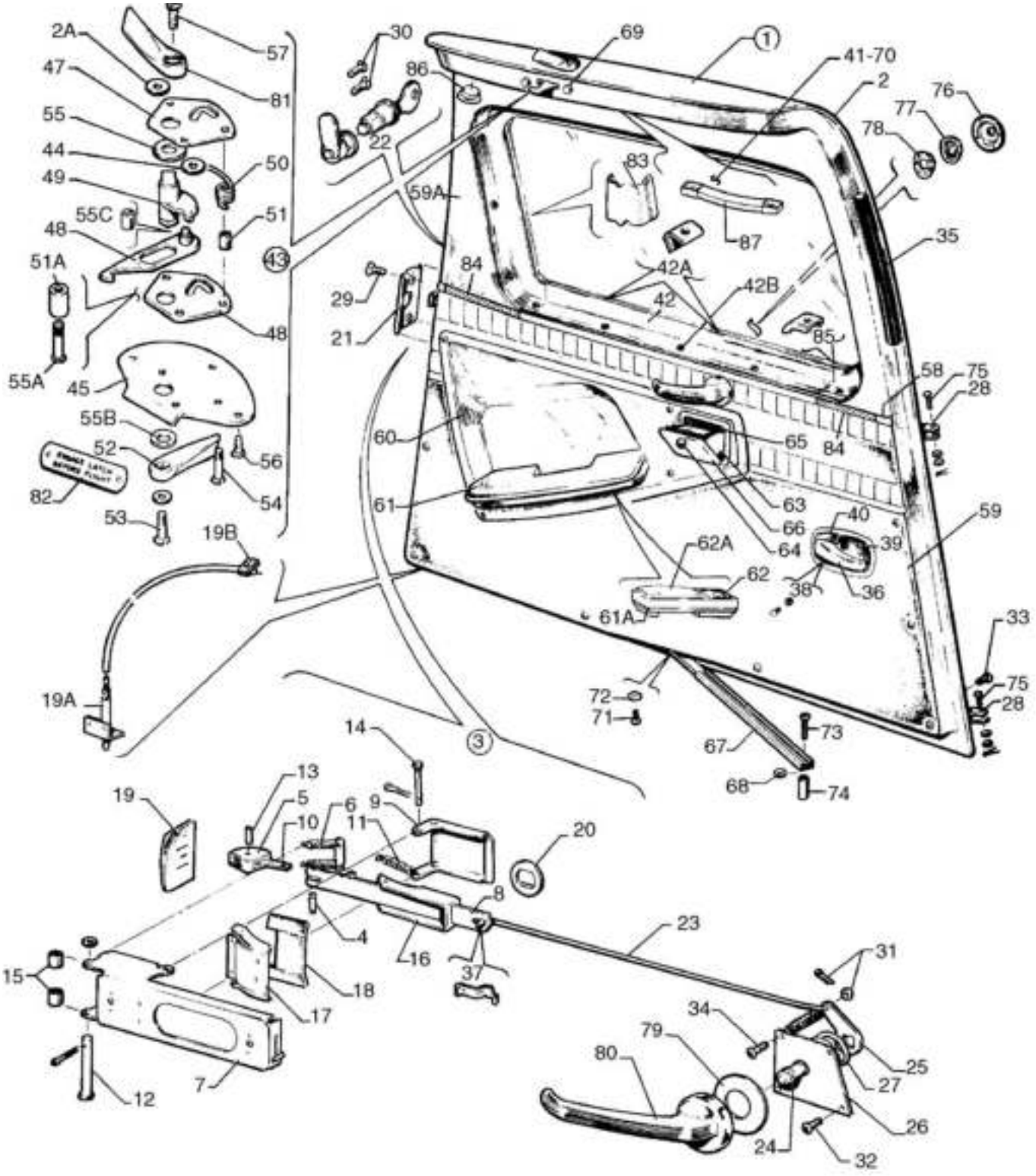

Figure 20. Aft Cabin Door

CODE EXPLANATIONS FOR FIGURE 20

A - Used on PA-32-260 with serial numbers 32-1 to 32-1110 incl., and PA-32-300 with serial numbers 32-4000 to 32-40565 incl
B - Used on PA-32-260 with serial numbers 32-1111 to 32-7200028 incl, and PA-32-300 with serial numbers 32-40566 to 32-7240095 incl
C - Used on PA-32-260 with serial numbers 32-1 to 32-7600033 incl., PA-32-300 with serial numbers 32-40000 to 32-7640142 incl., and PA-32R-300 with serial numbers 32R-7680001 to 32R-7680538 incl
D - Used on PA-32-260 with serial numbers 32-7200029 to 32-7300076 incl, and PA-32-300 with serial numbers 32-7240096 to 32-7340201 incl
E - Used on PA-32-260 with serial numbers 32-7600001 and up, PA-32-300 with serial numbers 32-7640001 and up, and PA-32R-300 with serial numbers 32R-7680001 and up
F - If matching switch and door locks are desired, order Kit 470-729
G - Used on PA-32-260 with serial numbers 32-1111 and up, PA-32-300 with serial numbers 32-40566 and up, and PA-32R-300
H - Used on PA-32S-300 Seaplane Model only
J - Used on PA-32-260 with serial numbers 32-7200029 and up, PA-32-300 with serial numbers 32-7240096 and up, and PA-32R-300
K - Used on PA-32-260 with serial numbers 32-1111 to 32-7200028 incl., and PA-32-300 with serial numbers 32-40566 to 32-7240095 incl. if lower door latch has been installed
L - Used on PA-32-260 with serial numbers 32-7100001 and up, PA-32-300 with serial numbers 32-7140001 and up, and PA-32R-300
M - Used if gray tinted window is installed
N - Used if existing door contains removable window retainer
O - Used on PA-32-260 with serial numbers 32-1 to 32-7200028 incl., and PA-32-300 with serial numbers 32-40000 to 32-7240095 incl
P - Used on PA-32-260 with serial numbers 32-7300001 and up, PA-32-300 with serial numbers 32-7340001 and up, and PA-32R-300
Q - 96893-00 Latch Assembly is a component of 69373-10, 69373-11, and 96981-05 Door Assemblies
R - Used on PA-32-260 with serial numbers 32-7400001 and up, PA-32-300 with serial numbers 32-7440001 and up, and PA-32R-300
S - Used on PA-32-260 with serial numbers 32-1251 to 32-1320 incl., and PA-32-300 with serial numbers 32-40851 to 32-41018 incl
T - Used on PA-32-260 with serial numbers 32-1111 to 32-1250 incl., and PA-32-300 with serial numbers 32-40566 to 32-40850 incl
U - Used on PA-32-260 with serial numbers 32-7100001 to 32-7100038 incl., and PA-32-300 with serial numbers 32-7140001 to 32-7140088 incl
V - Used on PA-32-260 with serial numbers 32-7200001 to 32-7200055 incl., and PA-32-300 with serial numbers 32-7240001 to 32-7240147 incl
W - These parts must be ordered from Service Spares Department, Piper Aircraft, Lock Haven, Penna
X - Used on PA-32-260 with serial numbers 32-7300001 to 32-7300076 incl., and PA-32-300 with serial numbers 32-7340001 to 32-7340201 incl
Y - Used on PA-32-260 with serial numbers 32-7400001 to 32-7400061 incl., and PA-32-300 with serial numbers 32-7440001 to 32-7440182 incl
Z - Used on PA-32-260 with serial numbers 32-1251 to 32-7400061 incl., and PA-32-300 with serial numbers 32-40851 to 32-7440001 incl
AA - When ordering, specify color red, blue, brown or gold
AB - When ordering, specify clear or gray tinted window
AC - Used on PA-32-260 with serial numbers 32-7700001 to 32-7700023 incl., PA-32-300 with serial numbers 32-7740001 to 32-7740113 incl., and PA-32R-300 with serial numbers 32R-7780001 to 32R-7780549 incl
AD - When ordering, specify color red, blue/green, gold, black or green
AE - Used on PA-32-260 with serial numbers 32-878 and up, PA-32-300 with serial numbers 32-40268 and up, and PA-32R-300
AF - Used if existing door does not contain removable window retainer
AG - Used on PA-32-260 with serial numbers 32-7400001 to 32-7600033 incl., PA-32-300 with serial numbers 32-7440001 to 32-7640142 incl., and PA-32R-300 with serial numbers 32R-7680001 to 32R-7680538 incl
AH - Used on PA-32-260 with serial numbers 32-7700001 and up, PA-32-300 with serial numbers 32-7740001 and up, and PA-32R-300 with serial numbers 32R-7780001 and up
AJ - Used on PA-32-260 with serial numbers 32-1111 to 32-7600033 incl., PA-32-300 with serial numbers 32-40566 to 32-7640142 incl., and PA-32H-300 with serial numbers 32R-7680001 to 32R-7680538 incl
AK - If matching ignition switch and door locks are desired, order Kit 87329-04
AL - Used on PA-32-260 with serial numbers 32-7600001 and up, PA-32-300 with serial numbers 32-7640001 to 32-7940149 incl., and PA-32R-300 with serial numbers 32R-7980001 and up
AM - Used on PA-32-300 only
AN - Used with door latch hook assembly that has a 3/8 O.D. welded stud
AQ - Used with door latch hook assembly that has a 1/4 O.D. welded stud and 3/8 O.D. removable roller

PIPER PARTS CATALOG

Figure and Index Number	Part Number	Code	NOMENCLATURE	No. Req.	SERIAL NUMBERS AFFECTED
20-1	68164-03	A	DOOR ASSEMBLY - Cabin, aft (less trim panel, armrest and auxiliary latch assembly)	1	
	69373-02	B	DOOR ASSEMBLY - Cabin, aft (less trim panel, armrest and auxiliary latch assembly)	1	
	69373-10	D,AB	DOOR ASSEMBLY - Cabin, aft (less trim panel and armrest and with auxiliary latch assembly)	1	
	96981-07	AB,AG	DOOR ASSEMBLY - Cabin, aft (less trim panel and armrest and with auxiliary latch assembly)	1	
	96981-09	AH	DOOR ASSEMBLY - Cabin, aft (less trim panel and armrest and with auxiliary latch assembly)	1	
-2	69474-00	A	* DOOR ASSEMBLY - Cabin, aft	1	
	99037-00	B	* DOOR ASSEMBLY - Cabin, aft	1	
	96995-00	D	* DOOR ASSEMBLY - Cabin, aft	1	
	96995-06	R	* DOOR ASSEMBLY - Cabin, aft	1	
-2a	434 138	J	* GROMMET - (MS35489-17)	1	
-3	68188-00		* LATCH ASSEMBLY - Door	1	
-4	14627-03		* * PIN - Door latch	1	
-5	69224-00		* * TONGUE ASSEMBLY - Door latch	1	
-6	14635-02		* * SPRING	2	
-7	79434-00		* * HOUSING ASSEMBLY - Door latch	1	
-8	66654-00		* * PLATE ASSEMBLY	1	
-9	79594-00		* * PLATE	1	
-10	81262-68		* * LINK	1	
-11	83302-43		* * SPRING	1	
-12	424 051		* * COTTER PIN - (MS24665-132)	1	
	424 163		* * PIN - (AN392-53)	1	
	407 562		* * WASHER - (AN960-6)	1	
-13	681 145		* * ROLL PIN - (MS16562-34)	1	
-14	424 162		* * PIN - (AN392-49)	1	
	424 051		* * COTTER PIN - (MS24665-132)	1	
	407 562		* * WASHER - (AN960-6)	1	
-15	14843-90		* * BUSHING	2	
-16	66641-00		* * PLATE - Door latch stop	1	
-17	21843-00		* * PLATE - Seal support	1	
-18	21844-00		* * SEAL	1	
-19	21478-00		* * SEAL	1	
-19a	96863-06	J,K	* ACTUATOR ASSEMBLY - Door latch, lower	1	
-19b	96864-00	J,K	* CLAMP - Lower door latch	2	
-20	21176-00		* SPACER - Door lock	1	
-21	68187-00		* PLATE - Trim, latch	1	
-22	752 301	C,F	* LOCK ASSEMBLY - Aft cabin door (10-377028)	1	
	87329-11	AH,AK	* LOCK ASSEMBLY - Aft cabin door	1	
-23	68181-00	A	* ROD - Door latch	1	
	99783-00	G	* ROD - Door latch	1	
-24	20743-00	A	* SHAFT - Door handle	1	
-25	20747-00	A	* LINK - Door latch	1	
-26	65567-00	A	* PLATE ASSEMBLY - Door latch	1	
-27	68183-00	A	* SPRING - Torque, door latch	1	
-28	68174-00		* HINGE - Aft cabin door	2	
	65388-58	H	* HINGE - Aft cabin door	2	32S-40000 to 32S-7240147 incl.
-29	414 761		* SCREW - (MS24693-S48)	2	
	477 673		* NUT - (MU-832-.38-.050/.075-L-F10)	2	
-30	415 518		* SCREW - (MS35206-228)	4	
-31	80122-05	A	* WASHER - Door rod	2	
	424 051	A	* COTTER PIN - (MS24665-132)	2	

When ordering, always specify Part Number, Description, and Serial Number of Aircraft

PIPER PARTS CATALOG

Figure and Index Number	Part Number	Code	NOMENCLATURE	No. Req.	SERIAL NUMBERS AFFECTED
20-32	416 997	A,W	* SCREW - (AN526-1032R12)	1	
-33	415 181	A	* SCREW - (AN526-C832R-4)	12	
	415 533	G	* SCREW - (MS35206-243)	12	
	407 120		* LOCK WASHER - (AN936B8)	12	
-34	416 149	A,W	* SCREW - (AN526-632R8)	3	
-35	19063-02	W	* MOULDING - Cabin door (quarter-round type)	12.5'	
	78741-02		* MOULDING - Cabin door (bulb type) 12.5' long	1	
-36	464 048	G	* HANDLE - Door, left (113 937 019L)	1	
-37	587 221	G	* SPRING - Pull rod (113-937-199)	1	
38	485 160	G	* SCREW - (NOO-014-2161)	1	
	494 141	G	* WASHER - (NOO-012-1131)	1	
-39	581 489	G	* PLATE Trim, black (311-837-247)	1	
-40	459 441	G	* ESCUTCHEON - (113-937-239B)	1	
-41	98068-00	N	* WINDOW - Cabin door, aft (.060 thick)	1	
	98069-03	N,R	* WINDOW - Cabin door, aft (.125 thick)	1	
	99069-02	L,M,N	* WINDOW Cabin door, aft (.080 thick)	1	
	99069-04	M,N,R	* WINDOW Cabin door, aft (.125 thick)	1	
-42	99070-00	N	* RETAINER - Window	1	
-42a	78088-00	P	* RETAINER - Door panel	2	
-42b	419 681	N,O	* SCREW - (PS10012-4)	16	
	494 001	N,O,W	* WASHER - (PS10016-4)	16	
	419 933	J	* SCREW - (4 x 1/2 Type A)	16	
-43	68175-00	A	* LATCH ASSEMBLY - Aft cabin door, auxiliary	1	
	68175-02	B	* LATCH ASSEMBLY - Aft cabin door, auxiliary	1	
	98993-02	J,Q	* LATCH ASSEMBLY - Aft cabin door, auxiliary	1	
-44	62893-06	O	* * WASHER	1	
	407 585	J,W	* * WASHER - (AN960-416L)	1	
-45	68186-00	O	* * PAN - Door latch	1	
	68186-02	J	* * PAN Door latch	1	
-46	68176-00	O	* * HOOK ASSEMBLY - Door latch	1	
	68176-02	J	* * HOOK ASSEMBLY - Door latch (with 3/8 O.D. welded stud)	1	
	68176-09	J	* * HOOK ASSEMBLY - Door latch (with 1/4 O.D. welded stud)	1	
-47	68179-00	O	* * PLATE - Door latch	1	
	68179-04	J,AN	* * PLATE - Door latch	1	
	68179-06	J,AO	* * PLATE - Door latch	1	
-48	68179-03	AN	* * PLATE - Door latch	1	
	68179-05	AO	* * PLATE - Door latch	1	
-49	68178-00	O	* * CAM - Door latch	1	
	68178-03	J	* * CAM Door latch	1	
-50	63046-00		* * SPRING - Door latch	1	
-51	63900-50		* * BUSHING	2	
-51a	63900-50	O	* * BUSHING	1	
	98996-00	J	* * BUSHING	1	
-52	63039-02	A	* * HANDLE - Door, auxiliary (sandstone)	1	
	38690-02	G	* * HANDLE - Door, auxiliary (white)	1	
-53	419 918	W	* * SCREW - (8 x 1/2 L. Type "B" Truss)	1	
	407 588	W	* * WASHER - (AN960-516L) Door handle	1	
-54	414 769	W	* * SCREW - (MS24693-S53)	2	
	404 833	W	* * NUT - (MS20364-832C)	2	
-55	407 589	W	* * WASHER - (AN960-816)	1	
-55a	414 769	O,W	* * SCREW (MS24693-S53)	1	
	414 777	J,W	* * SCREW - (MS24693-S47)	2	
	404 833	O,W	* * NUT - (MS20364-832C)	1	
-55b	62833-107	J	* * WASHER	1	
-55c	36572-03	J	* * ROLLER - Door latch (3/8 O.D.)	1	
-56	414 761	W	* SCREW - (MS24693-S48)	3	

When ordering, always specify Part Number, Description and Serial Number of Aircraft

PIPER PARTS CATALOG

Figure and Index Number	Part Number	Code	NOMENCLATURE	No Req	SERIAL NUMBERS AFFECTED
20-57	413 018	W	* SCREW - (8 x 1 1/2 L, Type "B" Truss)	1	
	407 586	W	* WASHER - (AN960-516L)	1	
58	69394-00	C	* MOULDING - Door panel	1	
-59	68456-02	A	PANEL ASSEMBLY - Door trim, red	1	
	69414-02	T	PANEL ASSEMBLY - Door trim, red	1	
	69414-07	S	PANEL ASSEMBLY - Door trim, red	1	
	99239-02	U	PANEL ASSEMBLY - Door trim, red	1	
	99239-06	V	PANEL ASSEMBLY - Door trim, red	1	
	580 426	X	PANEL ASSEMBLY - Door trim, red	1	
	579 795	AG	PANEL ASSEMBLY - Door trim, red	1	
	68456-03	A	PANEL ASSEMBLY - Door trim, brown	1	
	69414-03	T	PANEL ASSEMBLY - Door trim, brown	1	
	69414-11	S	PANEL ASSEMBLY - Door trim, green	1	
	99239-07	U	PANEL ASSEMBLY - Door trim, green	1	
	99239-13	V	PANEL ASSEMBLY - Door trim, green	1	
	580 431	X	PANEL ASSEMBLY - Door trim, green	1	
	579 790	AG	PANEL ASSEMBLY - Door trim, green	1	
	68456-04	A	PANEL ASSEMBLY - Door trim, blue	1	
	69414-04	T	PANEL ASSEMBLY - Door trim, blue	1	
	69414-08	S	PANEL ASSEMBLY - Door trim, blue	1	
	99239-03	U	PANEL ASSEMBLY - Door trim, blue	1	
	99239-09	V	PANEL ASSEMBLY - Door trim, blue/green	1	
	580 427	X	PANEL ASSEMBLY - Door trim, blue/green	1	
	579 794	AG	PANEL ASSEMBLY - Door trim, blue/green	1	
	68456-05	A	PANEL ASSEMBLY - Door trim, beige	1	
	69414-05	T	PANEL ASSEMBLY - Door trim, beige	1	
	69414-09	S	PANEL ASSEMBLY - Door trim, beige	1	
	99239-04	U	PANEL ASSEMBLY - Door trim, beige	1	
	99239-10	V	PANEL ASSEMBLY - Door trim, gold	1	
	580 428	X	PANEL ASSEMBLY - Door trim, gold	1	
	579 793	AG	PANEL ASSEMBLY - Door trim, gold	1	
	69414-06	T	PANEL ASSEMBLY - Door trim, black	1	
	69414-10	S	PANEL ASSEMBLY - Door trim, black	1	
	99239-05	U	PANEL ASSEMBLY - Door trim, black	1	
	99239-11	V	PANEL ASSEMBLY - Door trim, black	1	
	580 429	X	PANEL ASSEMBLY - Door trim, black	1	
	579 792	AG	PANEL ASSEMBLY - Door trim, black	1	
	69414-12	S	PANEL ASSEMBLY - Door trim, white	1	
	99239-08	U	PANEL ASSEMBLY - Door trim, white	1	
	99239-12	V	PANEL ASSEMBLY - Door trim, white	1	
	580 430	V	PANEL ASSEMBLY - Door trim, white	1	
	579 791	Y	PANEL ASSEMBLY - Door trim, white	1	
	580 703	AC	PANEL ASSEMBLY - Door trim	1	
	579 404	E	PANEL ASSEMBLY - Door trim, white/camel/black	1	
	579 535	F	PANEL ASSEMBLY - Door trim, olivetone	1	
	579 536	AL	PANEL ASSEMBLY - Door trim, midnight blue	1	
	579 310	AM	PANEL ASSEMBLY - Door trim, dark blue	1	32-7940150 and up
	579 537	E	PANEL ASSEMBLY - Door trim, raspberry/black	1	
	579 538	F	PANEL ASSEMBLY - Door trim, red/seal	1	
-59a	78085-03	X	COVER - Window trim	1	
	78085-07	AG	COVER - Window trim	1	
	78085-13	AH	COVER - Window trim	1	
-60	68484-00	A	PAN - Armrest	1	
-61	68492-06	A	PAD - Grip armrest, red	1	
	68492-09	A	PAD - Grip armrest, brown	1	
	68492-13	A	PAD - Grip armrest, blue	1	
	68492-14	A	PAD - Grip armrest, beige	1	
-61a	66710-16		HOUSING ASSEMBLY - Armrest	1	
-62	763 003	G	* BOX ASSEMBLY - Ash tray (S-25-AR-C)	1	

When ordering, always specify Part Number, Description and Serial Number of Aircraft

PIPER PARTS CATALOG

Figure and Index Number	Part Number	Code	NOMENCLATURE	No Req.	SERIAL NUMBERS AFFECTED
20 62a	66710-44	AD AJ	PAD - Armrest	1	
	66710-21	T	PAD - Armrest, brown	1	
	66710-26	Z	PAD - Armrest, white	1	
	580 731	AH	PAD - Armrest, camel	1	
	579 507	E	PAD - Armrest, olive tone	1	
	579 508	AL	PAD - Armrest, midnight blue	1	
	579 474	AM	PAD - Armrest, dark blue	1	32-7940150 and up
	579 509	E	PAD - Armrest, black	1	
	579 510	E	PAD - Armrest, tan	1	
63	453 141	A,W	BOX - Ash (947478)	1	
-64	65286-06	A	KNOB - Ash box, red	1	
	65286-06	A	KNOB - Ash box, blue	1	
	65286-07	A	KNOB - Ash box, brown	1	
	65286-08	A	KNOB - Ash box, tan	1	
65	484 385	A	RETAINER - Ash box	1	
-66	65304-00	A,AA	PANEL - Ash box	1	
-67	65727-00		HOLDER ASSEMBLY - Door	1	
-68	63020-02		BUSHING - Door holder	1	
-69	453 866	AE	BUMPER - Door (SJ-5003)	2	
70	767 023	AF	KIT - Aft door window replacement (includes window)	1	
-71	400 669		BOLT - Clevis (AN23-9A)	1	
-72	63020-02		BUSHING - Door holder	1	
-73	400 670		BOLT - Clevis (AN23-18A)	1	
-74	63900-25		BUSHING - Door holder	1	
	63900-70	H	BUSHING - Door holder	1	32S-40000 to 32S-7240147 incl
-75	424 204		PIN - (MS20392-3C13)	2	
	407 686	W	WASHER - (AN960-416L)	4	
	424 051	W	COTTER PIN - (MS24665-132)	2	
-76	69209-00	H	RETAINER - Door holding socket	1	32S-40000 to 32S-7240147 incl
-77	487 147	H	SOCKET - Door holding (XX16206)	1	32S-40000 to 32S-7240147 incl
-78	581 177	H	PLATE - Clinch (BS-16506)	1	32S-40000 to 32S-7240147 incl
79	62833 20	A	WASHER - Handle	1	
-80	464 031	A	HANDLE - (1H1287)	1	
-81	63039-00		HANDLE - Door auxiliary	1	
-82	88555-05	P	PLACARD - Door latch	1	
-83	99997-00	P	EXTRUSION - Vinyl	5	
-84	78057-00	X	RETAINER - Window frame, extrusion	1	
-85	99999-00	X	CAP - Extrusion trim	2	
-86	453 674	P	PLUG - Button (SS-50834)	1	
-87	484 412		HANDLE - Door assist (PS10091-1)	1	

When ordering, always specify Part Number, Description and Serial Number of Aircraft

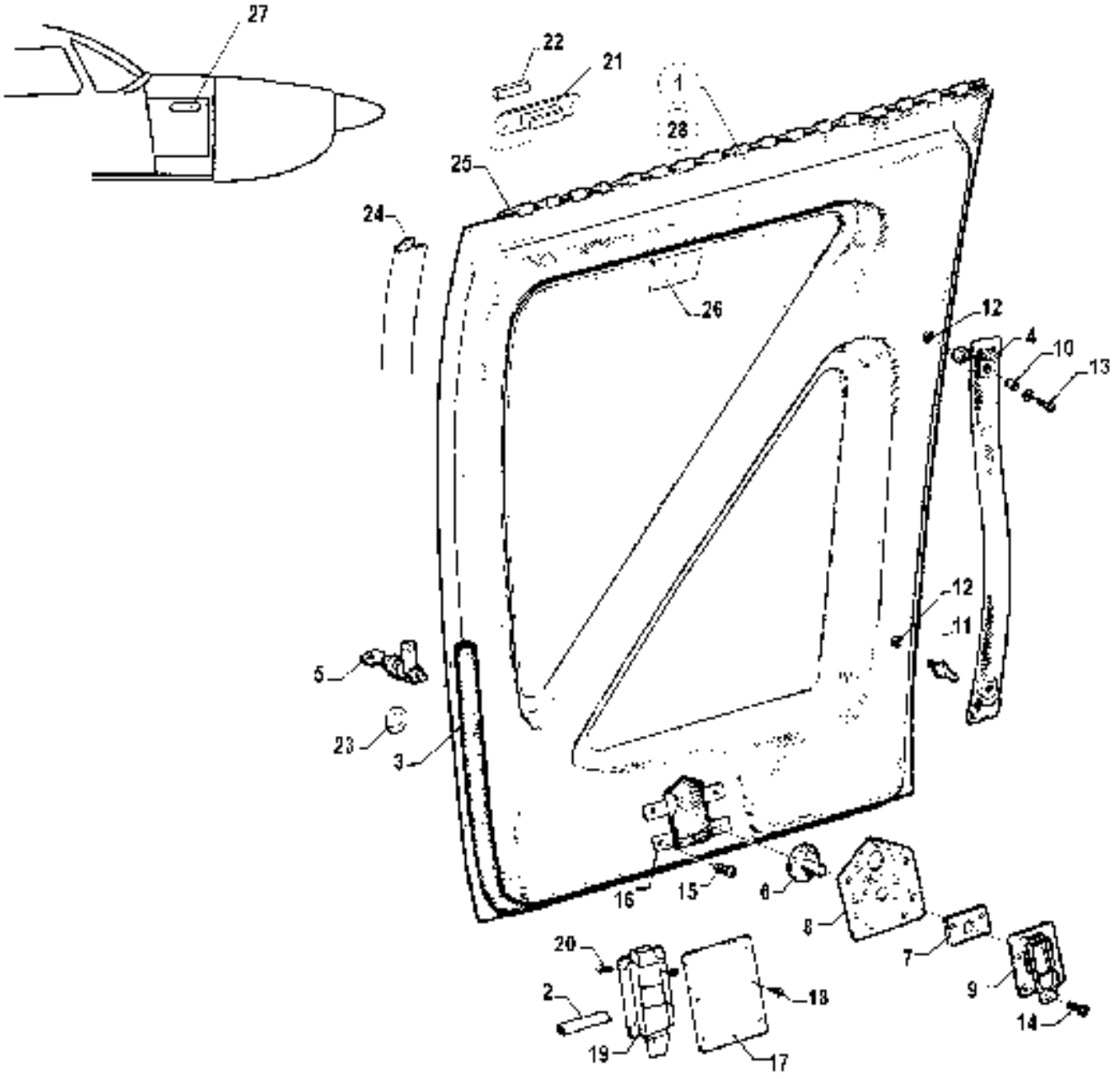

Figure 21. Forward Baggage Door

CODE EXPLANATIONS FOR FIGURE 21

A - Used on PA-32S-300 Seaplane Model only.
B - Used on PA-32-260 with serial numbers 32-1 to 32-1110 inclusive, and PA-32-300 with serial numbers 32-40000 to 32-40565 incl.
C - Used on PA-32-260 with serial numbers 32-1111 and up, PA-32-300 with serial numbers 32-40566 and up, and PA-32R-300.
D - Used on PA-32-260 with serial numbers 32-51 to 32-1110 inclusive, and PA-32-300 with serial numbers 32-40000 to 32-40565 incl.
E - Not available. order Door Assembly, P/N 69853-06 and Striker Plate, P/N 66794-00 to make replacement.
F - If door incorporates Trigger-Action Latch H38-120-750, identifiable by the rectangular push button, order part for serial numbers 32-1111 and up on PA-32-260, or 32-40566 and up on PA-32-300.
G - If existing door lock does not incorporate a notched cam, Striker Plate 99463-00 must also be ordered.
H - Used on PA-32-260 with serial numbers 32-1111 to 32-7600001 inclusive, and PA-32-300 with serial numbers 32-40566 to 32-7640021 inclusive.
J - Used on PA-32-260 with serial numbers 32-7600002 and up, PA-32-300 with serial numbers 32-7640022 and up, and PA-32R-300.
K - Used on PA-32R-300 only.
L - Used on PA-32-260 with serial numbers 32-1111 and up, and PA-32-300 with serial numbers 32-40566 and up.
M - Used on PA-32-260 with serial numbers 32-1 to 32-7500053 inclusive, and PA-32-300 with serial numbers 32-40000 to 32-7540198 inclusive.
N - If matching switch and door locks are desired, order Kit 87323-04 for PA-32-260 with serial numbers 32-7600002 and up, PA-32-300 with serial numbers 32-7640030 and up, and PA-32R-300 with serial numbers 32R-7680014 and up.
O - Used on PA-32-260 with serial numbers 32-7800001 and up, PA-32-300 with serial numbers 32-7840001 and up, and PA-32R-300 with serial numbers 32R-7880001 and up.
P - Used on PA-32-260 with serial numbers 32-1 to 32-7700023 inclusive, PA-32-300 with serial numbers 32-40000 to 32-7740113 inclusive, and PA-32R-300 with serial numbers 32R-7680001 to 32R-7780549 inclusive.
Q - Not available. Order Door Assembly, P/N 69853-06 to make replacement.
R - Used on PA-32-300 only.
S - Reference latest revision to Piper Service Bulletin 463. Used on PA-32-260 with serial numbers 32-01 to 32-7500039 inclusive and PA-32-300 with serial numbers 32-40001 to 32-7540147 inclusive. The forward edge of the forward baggage door can develop delamination of the fiberglass structure, which could result in separation of the door in flight.
T - Reference latest revision to Piper Service Letter 864, which provides instructions for installing a striker plate on the fuselage or cowling to prevent damage should the door swing beyond its normal limit.

PIPER PARTS CATALOG

Figure and Index Number	Part Number	Code	NOMENCLATURE	No. Req.	SERIAL NUMBERS AFFECTED
21-1	68130-00	B,E	DOOR ASSEMBLY - Forward baggage (complete)	1	
	69494-00	H,Q	DOOR ASSEMBLY - Forward baggage (complete)	1	
	69853-06	J	DOOR ASSEMBLY - Forward baggage (complete) bonded	1	
-2	66793-09	C	* SEAL - Baggage door	1	
-3	19063-02		* MOULDING - Baggage door (quarter-round type)	8	
	189 139		* MOULDING - Baggage door (bulb type)	8	
-4	65440-801		* STRAP ASSEMBLY - Baggage door, white (11" L)	1	
	65440-07		* STRAP ASSEMBLY - Baggage door, white (11.75"L)	1	
-5	62937-08	B,F,G	* LOCK ASSEMBLY - Baggage door	1	
	87329-09	C,N	* LOCK ASSEMBLY - Baggage door	1	
-6	68135-00	F	* BUTTON - Latch	1	32-1 to 32-50 inclusive
-7	68134-00	F	* PLATE ASSEMBLY - Button guide	1	32-1 to 32-50 inclusive
-8	68136-00	F	* PLATE - Mounting	1	32-1 to 32-50 inclusive
	68139-00	D	* PLATE - Mounting	1	
-9	472 021	F	* LATCH ASSEMBLY - (Self-closing H-4000-C used with circular push button)	1	32-1 to 32-50 inclusive
-10	63900-31	B,K	* BUSHING - Strap	1	
	63900-73	A	* BUSHING - Strap	1	32S-40000 to 32S-7240147 incl.
-11	487 674		* STUD - (XX-16362 x 3/8)	1	
-12	406 863		* RIVNUT - (A8-K-75)	2	
-13	415 452	L	* SCREW - (AN526-832R12)	1	
	415 537	K	* SCREW - (MS35206-247)	1	
	407 564		* WASHER - (AN960-10)	1	
	407 563	L	* WASHER - (AN960-8)	1	
-14	415 683		* SCREW - (AN515-4R6)	4	
	407 561		* WASHER - (AN960-4)	4	
	404 908		* NUT - (MS20365-440C)	4	
-15	415 449		* SCREW - (AN526-832R8)	4	
-16	477 672	B	* NUT - (MU-832-.38-.025/.050-L-F10)	4	
-17	69495-00	C	* COVER - Baggage door, lock	1	
-18	415 448	L	* SCREW - (AN526-832R6)	6	
	411 582	K	* SCREW - (MS35207-261)	6	
	477 672	C	* NUT - (MU-832-.38-.025/.050-L-F10)	6	
-19	472 077	C	* LATCH - Trigger action H38-.064-.750 (incorporates rectangular push button)	1	
-20	414 763	C	* SCREW - (MS24693-S50)	4	
	404 910	C	* NUT - (MS20365-832C)	4	
-21	37996-02	O	* COVER - Magnet	1	
-22	474 107	O	* MAGNET - (H34-607) Baggage light	1	
-23	21176-00		SPACER - Door lock	1	
-24	69494-07	M	SHAPE ROLLED FORWARD BAGGAGE DOOR	1	
-25	63744-08		PIN - Hinge, door	1	
-26	68803-00	P	PLACARD - Light switch	1	
	35669-18	O	PLACARD - Baggage light	1	
-27	79883-002	T	STRIKER PLATE	1	
	420 693	T	RIVET - (MS20426-A3-7)	2	
-28	760 972	S	KIT - Forward baggage door modification	RF	

When ordering, always specify Part Number, Description, and Serial Number of Aircraft

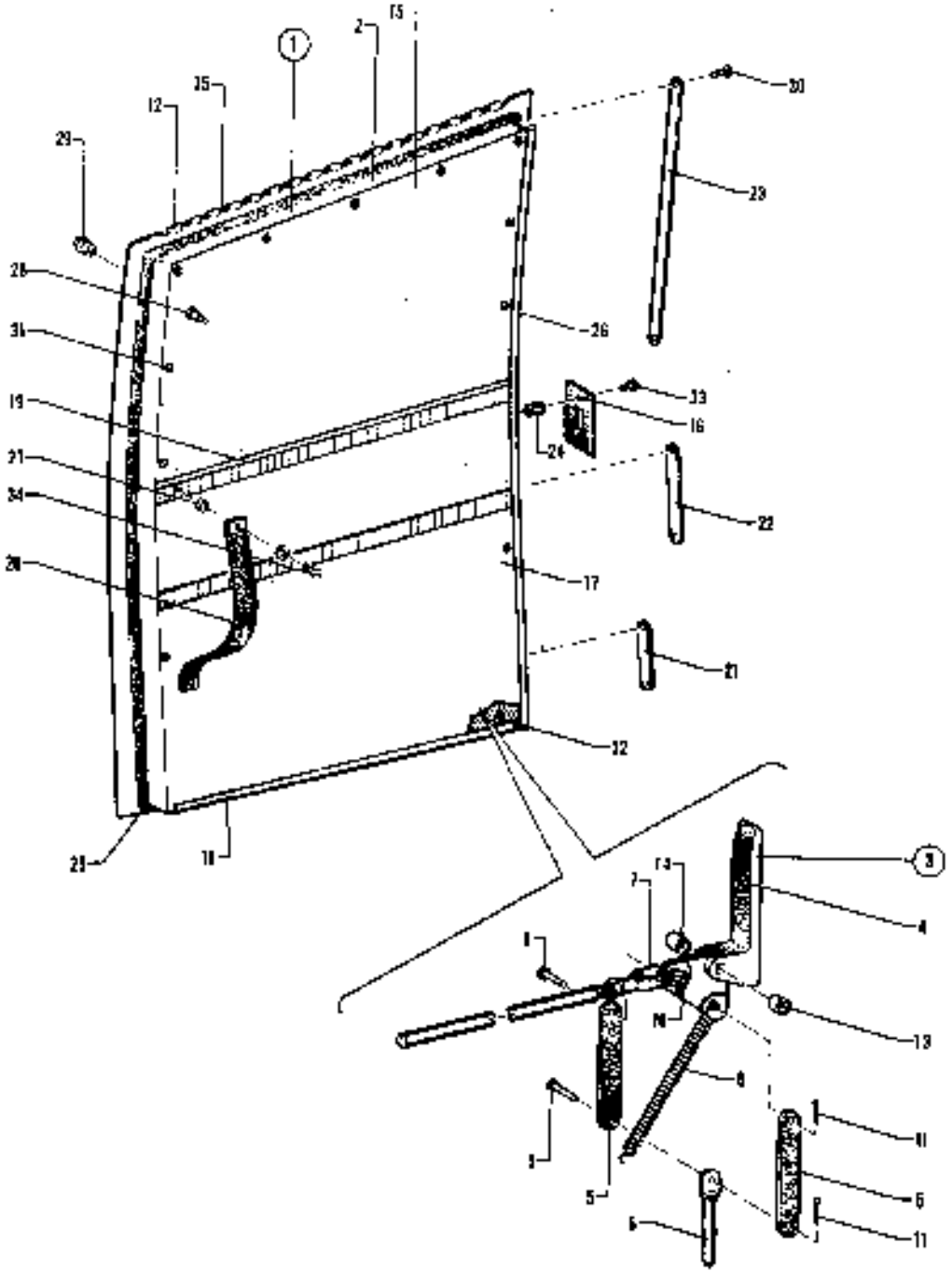

Figure 22. Aft Cargo Door
(PA-32-260 - Serial Nos. 32-1 to 32-7300076 inclusive)
(PA-32-300 - Serial Nos. 32-40000 to 32-7340201 inclusive)

CODE EXPLANATIONS FOR FIGURE 22

A - Used on PA-32-260 with serial numbers 32-1 to 32-7300076 incl., and PA-32-300 with serial numbers 32-40000 to 32-7340201 incl.
B - Used on PA-32-260 with serial numbers 32-1111 to 32-7300076 incl., and PA-32-300 with serial numbers 32-40566 to 32-7340201 incl.
C - Used on PA-32-260 with serial numbers 32-1251 to 32-1320 incl., and PA-32-300 with serial numbers 32-40851 to 32-41018 incl.
D - Used on PA-32-260 with serial numbers 32-1111 to 32-1250 incl., and PA-32-300 with serial numbers 32-40566 to 32-40850 incl.
E - When ordering, specify color red, brown, blue or beige.
F - When ordering, specify color red, brown, blue, beige or black.
G - When ordering, specify color red, blue, beige, black, green or white.
H - Used on PA-32-260 with serial numbers 32-7100001 to 32-7100038 incl., and PA-32-300 with serial numbers 32-7140001 to 32-7140086 incl.
J - When ordering, specify color red, blue/green, gold, green, black or White.
K - Used on PA-32-260 with serial numbers 32-7200001 to 32-7200065 incl., and PA-32-300 with serial numbers 32-7240001 to 32-7240147 incl.
L - Used on PA-32-260 with serial numbers 32-7300001 to 32-7300076 incl., and PA-32-300 with serial numbers 32-7340001 to 32-7340201 incl.
M - Used on PA-32-260 with serial numbers 32-1 to 32-1110 incl., and PA-32-300 with serial numbers 32-40000 to 32-40565 incl.
W - These parts must be ordered from Service Spares Department, Piper Aircraft, Lock Haven, Penna.

PIPER PARTS CATALOG

Figure and Index Number	Part Number	Code	NOMENCLATURE	No. Req.	SERIAL NUMBERS AFFECTED
22-1	68999-04	E,M	DOOR ASSEMBLY - Cargo	1	
	68999-07	D,F	DOOR ASSEMBLY - Cargo	1	
	68999-09	C,G	DOOR ASSEMBLY - Cargo	1	
	68999-11	G,H	DOOR ASSEMBLY - Cargo	1	
	68999-12	J,K	DOOR ASSEMBLY - Cargo	1	
	68999-13	J,L	DOOR ASSEMBLY - Cargo	1	
-2	68953-00		DOOR ASSEMBLY - Cargo	1	
-3	68976-00		LATCH ASSEMBLY - Cargo door	1	
-4	69112-00		HANDLE - Cargo door latch	1	
-5	68980-00		LINK - Cargo door latch	2	
-6	68978-00		PIN - Cargo door latch	1	
-7	68981-00		PIN ASSEMBLY - Cargo door latch	1	
-8	68963-00		SPRING - Cargo door latch	1	
-9	424 172		PIN - (MS20392-2C9)	2	
-10	424 192	W	PIN - (MS20392-2C15)	1	
-11	424 085	W	PIN - Cotter (MS24665-151)	2	
-12	68984-00		HINGE HALF - Cargo door	1	
-13	63900-91		BUSHING - Cargo door	1	
-14	63900-92		BUSHING - Cargo door	1	
-15	68998-00	M	PANEL ASSEMBLY - Upper cargo door, antique white	1	
	68998-03	B	PANEL ASSEMBLY - Upper cargo door, chalk white	1	
-16	63293-02		PLATE - Door latch striker	1	
-17	69057-02	G	PANEL - Cargo door lower, red	1	
	69420-02	D	PANEL - Cargo door lower, red	1	
	69564-02	C	PANEL - Cargo door lower, red	1	
	99234-02	H	PANEL - Cargo door lower, red	1	
	99234-08	K	PANEL - Cargo door lower, red	2	
	580 432	L	PANEL - Cargo door lower, red	1	
	69057-03	M	PANEL - Cargo door lower, brown	1	
	69420-03	D	PANEL - Cargo door lower, brown	1	
	69564-06	C	PANEL - Cargo door lower, green	1	
	99234-07	H	PANEL - Cargo door lower, green	1	
	99234-13	K	PANEL - Cargo door lower, green	1	
	580 437	L	PANEL - Cargo door lower, green	1	
	69057-04	M	PANEL - Cargo door lower, blue	1	
	69420-04	D	PANEL - Cargo door lower, blue	1	
	69564-03	C	PANEL - Cargo door lower, blue	1	
	99234-00	H	PANEL - Cargo door lower, blue	1	
	99234-09	K	PANEL - Cargo door lower, blue/green	1	
	580 433	L	PANEL - Cargo door lower, blue/green	1	
	69057-06	M	PANEL - Cargo door lower, beige	1	
	69420-05	D	PANEL - Cargo door lower, beige	1	
	69564-04	C	PANEL - Cargo door lower, beige	1	
	99234-04	H	PANEL - Cargo door lower, beige	1	
	99234-10	K	PANEL - Cargo door lower, gold	1	
	580 434	L	PANEL - Cargo door lower, gold	1	
	69420-08	D	PANEL - Cargo door lower, black	1	
	69564-05	C	PANEL - Cargo door lower, black	1	
	99234-05	H	PANEL - Cargo door lower, black	1	
	99234-11	K	PANEL - Cargo door lower, black	1	
	580 435	L	PANEL - Cargo door lower, black	1	
	69564-07	C	PANEL - Cargo door lower, White	1	
	99234-06	H	PANEL - Cargo door lower, white	1	
	99234-12	K	PANEL - Cargo door lower, white	1	
	580 436	L	PANEL - Cargo door lower, white	1	

PIPER PARTS CATALOG

Figure and Index Number	Part Number	Code	NOMENCLATURE	No. Req.	SERIAL NUMBERS AFFECTED
22 18	68547-04		* RETAINER - Cargo door, lower	1	
-19	68547-05		* RETAINER - Cargo door middle	1	
20	65440-07		* STRAP ASSEMBLY - Cargo door, white	1	
-21	63142-28		* TRIM STRIP - Cargo door, lower	1	
22	63142-29		* TRIM STRIP - Cargo door, middle	1	
-23	63142-30		* TRIM STRIP - Cargo door, upper	1	
-24	63257-00		* BUSHING - Striker plate	2	
-25	19063-02	W	* MOULDING - Cargo door (quarter round type)	6'	
	169 139		* MOULDING - Cargo door (bulb type)	6'	
-26	68999-05	M	* WINDLACING - Cargo door	1	
	68999-08	B	* WINDLACING - Cargo door	1	
-27	63900 79		* BUSHING - Cargo door	1	
-28	487 674		* STUD - (XX-1636) x 3/8)	1	
-29	406 883	W	* RIVNUT - (A8K-75)	1	
-30	419 681		* SCREW - (4 x 1/2 L) Type "A"	8	
31	419 681		* SCREW - (4 x 1/2 L) Type "A"	12	
	494 001	W	* WASHER - (#4 Finish) Nickel finish	12	
-32	419 633		* SCREW - (4 x 1/2 L) Type "A"	8	
-33	416 464	W	* SCREW - (AN526-832R16)	2	
-34	416 464	W	* SCREW (AN526-832R16)	1	
	407 564	W	* WASHER - (AN960-10)	1	
-35	63744-10		PIN - Hinge, cargo door	1	

When ordering, always specify Part Number, Description and Serial Number of Aircraft

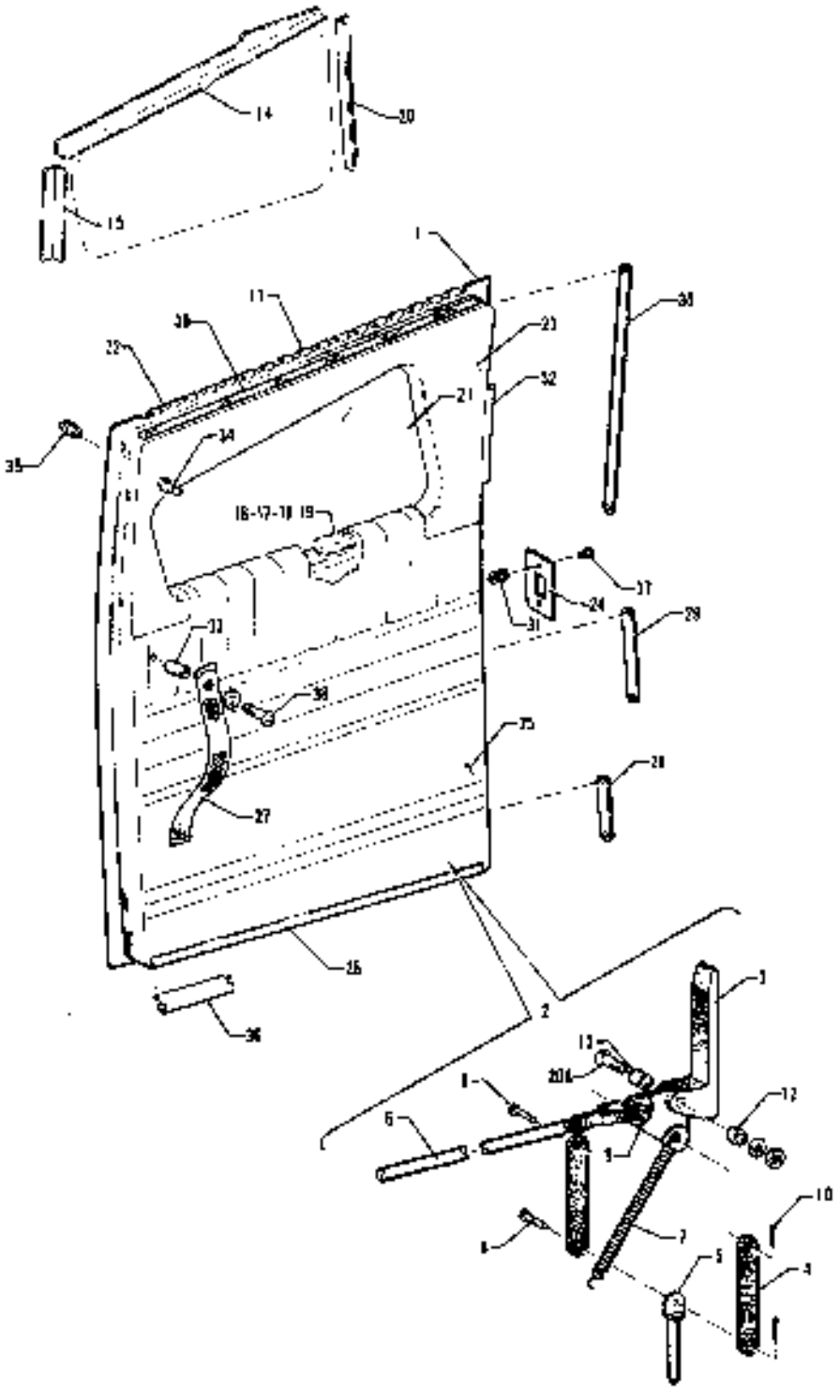

Figure 23 Aft Cargo Door
(PA-32-260 - Serial Nos. 32-7400001 and up)
(PA-32-300 - Serial Nos. 32-7440001 and up)
(PA-32R-300 - Serial Nos. 32R-7680001 and up)

CODE EXPLANATIONS FOR FIGURE 23

A Used on PA-32-260 with serial numbers 32-7400001 and up, PA-32-300 with serial numbers 32-7440001 and up, and PA-32R-300

B - Used on PA-32-260 with serial numbers 32-7400001 to 32-7600039 inclusive, PA-32-300 with serial numbers 32-7440001 to 32-7640142 inclusive, and PA 32R 300 with serial numbers 32R-7680001 to 32R-7680538 inclusive

C - Used on PA-32-260 with serial numbers 32-7400001 to 32 7400061 inclusive, and PA-32-300 with serial numbers 32-7440001 to 32-7440182 inclusive

D Used on PA-32 260 with serial numbers 32-7400019 and up, PA-32-300 with serial numbers 32-7440150 and up, and PA-32R-300

E - Used on PA-32-260 with serial numbers 32 7700001 to 32-7700023 inclusive. PA-32-300 with serial numbers 32-7740001 to 32-7740113 inclusive, and PA-32R-300 with serial numbers 32R-7780001 to 32R-7780549 inclusive

F - Used on PA-32-260 with serial numbers 32-7800001 and up, PA-32-300 with serial numbers 32-7840001 and up, and PA-32R-300 with serial numbers 32R-7880001 and up

G - Used on PA-32-260 with serial numbers 32-7800001 and up. PA-32-300 with serial numbers 32-7840001 to 32-7840149 incl and PA-32R 300 with serial numbers 32R 7880001 and up

H - Used on PA-32-300 only

J - Used on PA-32-260 with serial numbers 32-7700001 and up. PA-32-300 with serial numbers 32-7740001 and up, and PA 32R 300 with serial numbers 32R-7780001 and up

W These parts must be ordered from Service Spares Department, Piper Aircraft, Lock Haven, Penna

PIPER PARTS CATALOG

Figure and Index Number	Part Number	Code	NOMENCLATURE	No Req	SERIAL NUMBERS AFFECTED
23-1	69868-02		DOOR ASSEMBLY - Cargo	1	
-2	68978-00		* LATCH ASSEMBLY - Cargo door	1	
-3	69112-00		* * HANDLE - Cargo door latch	1	
-4	68980-00		* * LINK - Cargo door latch	2	
-5	68978-00		* * PIN - Cargo door latch	1	
6	68981-00		* * PIN ASSEMBLY - Cargo door latch	1	
7	68983-00		* * SPRING - Cargo door	1	
-8	424 172		* * PIN - (MS20392-2C9)	2	
-9	424 152	W	* * PIN - (MS20392-2C15)	1	
-10	424 095	W	* * COTTER PIN - (MS24665-151)	2	
11	68984-00		* HINGE HALF - Cargo door	1	
12	63900-87		* BUSHING - Cargo door	1	
-13	63900-82		* BUSHING - Cargo door	1	
-14	69722-00		* ANGLE - Top, cargo door	1	
-15	69723-00		* ANGLE - Rear, cargo door	1	
-16	69724-00		* RETAINER - Front, cargo door window	1	
17	69714-01		* RETAINER - Bottom, cargo door window	1	
-18	69725-00		* RETAINER - Top, cargo door window	1	
-19	69726-00		* RETAINER - Rear, cargo door window	1	
-20	69721-00		* ANGLE - Front, cargo door	1	
-20a	411 540	W	* SCREW - (MS35207-271)	1	
	407 664	W	* WASHER - (AN960-10)	1	
	404 887	W	* NUT - (MS20365-1032C)	1	
-21	69706-00		WINDOW - Cargo door, clear (.080 thick)	1	
	69706-02		WINDOW - Cargo door, tinted (.080 thick)	1	
	69706-03		WINDOW - Cargo door, clear (.125 thick)	1	
	69706-04		WINDOW - Cargo door, tinted (.125 thick)	1	
-22	63744-10		PIN - Hinge, cargo door	1	
-23	69859-08	B	COVER - Upper cargo door	1	
	69859-07	J	COVER - Upper cargo door	1	
-24	63293-02		PLATE - Door latch striker	1	
-25	579 919	B	PANEL ASSEMBLY - Cargo door, red	1	
	579 918	B	PANEL ASSEMBLY - Cargo door, blue/green	1	
	579 917	B	PANEL ASSEMBLY - Cargo door, gold	1	
	579 916	B	PANEL ASSEMBLY - Cargo door, black	1	
	579 915	C	PANEL ASSEMBLY - Cargo door, white	1	
	579 914	B	PANEL ASSEMBLY - Cargo door, green	1	
	550 699	E	PANEL ASSEMBLY - Cargo door	1	
	579 400	F	PANEL ASSEMBLY - Cargo door, white/camel/black	1	
	579 519	F	PANEL ASSEMBLY - Cargo door, olivestone	1	
	579 520	G	PANEL ASSEMBLY - Cargo door, midnight blue	1	
	579 306	H	PANEL ASSEMBLY - Cargo door, dark blue	1	32 7940150 and up
	579 521	F	PANEL ASSEMBLY - Cargo door, raspberry/black	1	
	579 522	F	PANEL ASSEMBLY - Cargo door, tan/seal	1	
-26	68547-04		RETAINER - Cargo door, lower	1	
27	65440-07		STRAP ASSEMBLY - Cargo door, white	1	
-28	63142-28		TRIM STRIP - Cargo door, lower	1	
-29	63142-29		TRIM STRIP - Cargo door, middle	1	
-30	63142-30		TRIM STRIP - Cargo door, upper	1	
-31	63257-00		BUSHING - Striker plate	2	
-32	68999-08		WINDLACING - Cargo door	1	
-33	63900-79		BUSHING - Cargo door (.55 LI	1	
	63900-136		BUSHING - Cargo door (.40 LI	1	
34	497 674		STUD - (MX-16962 x 3/8)	1	
-35	406 863	W	RIVNUT - (A8K-75)	1	

When ordering, always specify Part Number, Description and Serial Number of Aircraft

PIPER PARTS CATALOG

Figure and Index Number	Part Number	Code	NOMENCLATURE	No Req.	SERIAL NUMBERS AFFECTED
23-36	189 139		MOULDING - Cargo door (bulb type)	2'	
	19063-02	W	MOULDING - Cargo door (quarter-round type)	2'	
-37	415 454	W	SCREW - (AN526-832R16)	2	
-38	415 454	W	SCREW - (AN526-832R16)	1	
	407 564	W	WASHER - (AN960 10)	1	
-39	65892 02	D	SEAL - Door	1	

PIPER PARTS CATALOG

Figure and Index Number	Part Number	Code	NOMENCLATURE	No. Req.	SERIAL NUMBERS AFFECTED

THIS SPACE INTENTIONALLY LEFT BLANK

1F13 THRU 1F24
INTENTIONALLY LEFT BLANK

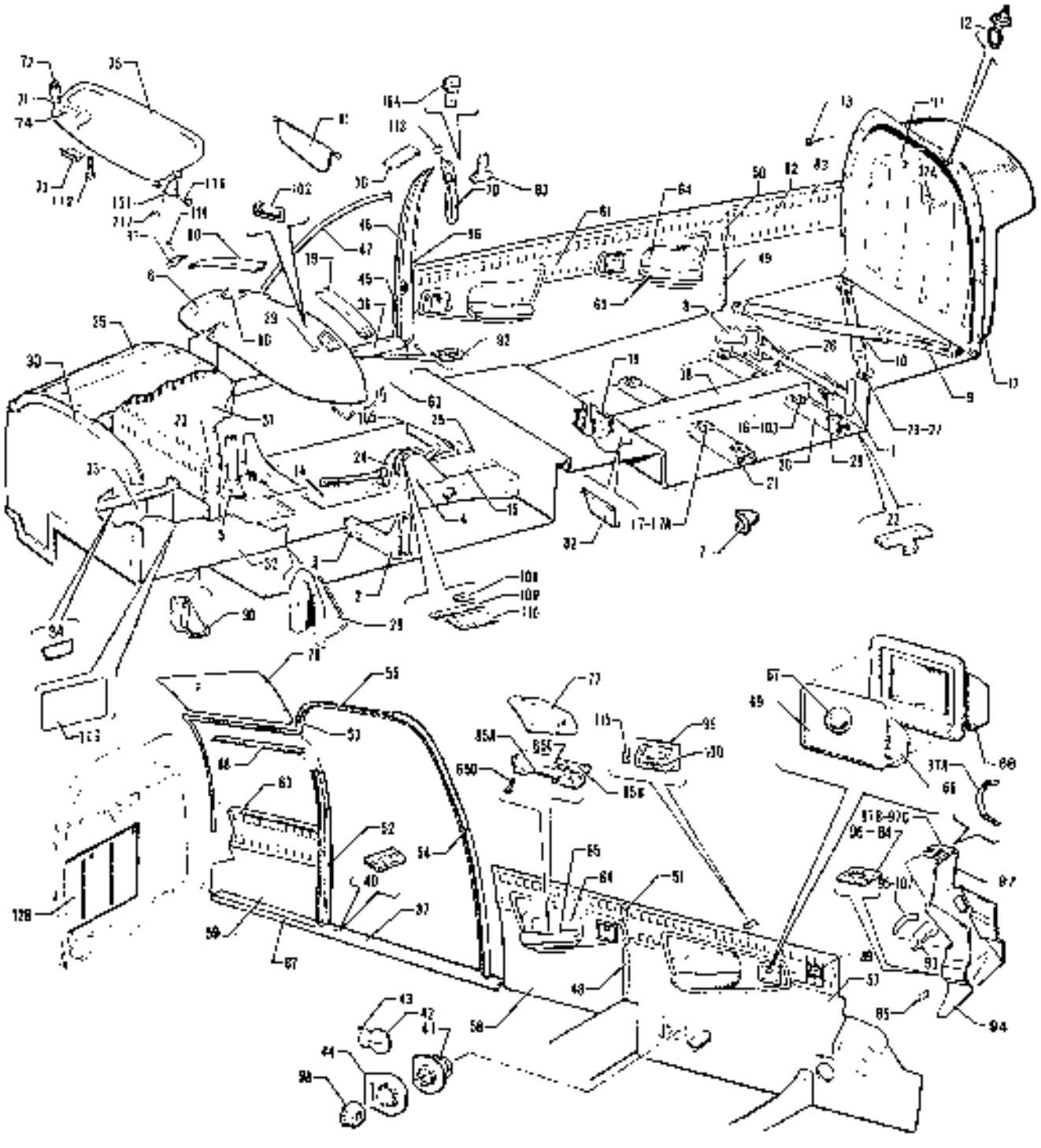

Figure 24 Cockpit Finishing Installation

CODE EXPLANATIONS FOR FIGURE 24

A - Used if cargo door is installed
B - Used on PA-32-260 with serial numbers 32-1 to 32-853 incl, and PA-32-300 with serial numbers 32-40000 to 32-40265 incl
C - Used on PA-32-260 with serial numbers 32-854 to 32-1110 incl, and PA-32-300 with serial numbers 32-40266 to 32-40515 incl
D - Used on PA-32-260 with serial numbers 32-7200001 to 32-7600033 incl, PA-32-300 with serial numbers 32-7240001 to 32-7640142 incl, and PA-32R-300 with serial numbers 32R-7680001 to 32R-7680538 incl
F - Used on PA-32-260 with serial numbers 32-1111 and up, PA-32-300 with serial numbers 32-40516 and up, and PA-32R-300
F - Used on PA-32-260 with serial numbers 32-1 to 32-1110 incl, and PA-32-300 with serial numbers 32-40000 to 32-40565 incl
G - Used on PA-32-260 with serial numbers 32-1111 to 32-7100038 incl, and PA-32-300 with serial numbers 32-40566 to 32-7140086 incl
H - Used on PA-32-260 with serial numbers 32-1251 and up, PA-32-300 with serial numbers 32-40851 and up, and PA-32R-300
J - Used on PA-32-260 with serial numbers 32-1111 to 32-1320 incl, and PA-32-300 with serial numbers 32-40616 to 32-41018 incl
K - Used on PA-32-260 with serial numbers 32-7500001 to 32-7600033 incl, PA-32-300 with serial numbers 32-7540001 to 32-7640142 incl, and PA-32R-300 with serial numbers 32R-7680001 to 32R-7680538 incl
L - Used on PA-32-260 with serial numbers 32-7200001 to 32-7200065 incl, and PA-32-300 with serial numbers 32-7240001 to 32-7240147 incl
M - Used on PA-32-260 and PA-32-300 only
N - Used on PA-32R-300 only
O - Used on PA-32-260 with serial numbers 32-1 to 32-1110 incl, and PA-32-300 with serial numbers 32-40000 to 32-40515 incl
P - Used on PA-32-260 with serial numbers 32-1031 to 32-1110 incl, and PA-32-300 with serial numbers 32-40456 to 32-40565 incl
Q - Used on PA-32-260 with serial numbers 32-1251 to 32-1320 incl, and PA-32-300 with serial numbers 32-40851 to 32-41018 incl
R - Used on PA-32-260 with serial numbers 32-1 to 32-939 incl, and PA-32-300 with serial numbers 32-40000 to 32-40357 incl
S - Used on PA-32-260 with serial numbers 32-940 to 32-1110 incl, and PA-32-300 with serial numbers 32-40358 to 32-40565 incl
T - Used on PA-32-260 with serial numbers 32-1111 and up, PA-32-300 with serial numbers 32-40566 and up, and PA-32R-300
U - Used on PA-32-260 with serial numbers 32-1 to 32-1320 incl, and PA-32-300 with serial numbers 32-40000 to 32-41018 incl
V - Used on PA-32-260 with serial numbers 32-7100001 to 32-7600033 incl, and PA-32-300 with serial numbers 32-7140001 to 32-7640142 incl
W - These parts must be ordered from Service Spares Department, Piper Aircraft, Lock Haven, Penna
X - When ordering, specify color red, blue/green, gold, black, green, white or bark. Specify color "bark I" for PA-32-260 with serial numbers 32-7700001 to 32-7700013 incl, PA-32-300 with serial numbers 32-7740001 to 32-7740044 incl, and PA-32R-300 with serial numbers 32R-7680001 to 32R-7680214 incl. Specify color "bark II" for PA-32-260 with serial numbers 32-7700014 and up, PA-32-300 with serial numbers 32-7740045 and up, and PA-32R-300 with serial numbers 32R-7680215 and up
Y - Used on PA-32-260 with serial numbers 32-875 to 32-1110 incl, and PA-32-300 with serial numbers 32-40000 to 32-40515 incl
Z - Used on PA-32-300 with serial numbers 32-7940001 and up, and PA-32R-300
AA - Used on PA-32-260 with serial numbers 32-1 to 32-7600002 incl, and PA-32-300 with serial numbers 32-40000 to 32-7640028 incl
AB - Used when baggage compartment light is installed
AC - Used on PA-32-260 with serial numbers 32-1111 to 32-1320 incl, and PA-32-300 with serial numbers 32-40566 to 32-41018 incl
AD - Used on PA-32-260 with serial numbers 32-854 and up, PA-32-300 with serial numbers 32-40266 and up, and PA-32R-300
AE - Used on PA-32-300 with serial numbers 32-7240056 and up, and PA-32R-300 when air conditioning is installed
AF - Used on PA-32R-300 with serial numbers 32R-7680001 to 32R-7680072 incl, 32R-7680074 to 32R-7680155, 32R-7680157 to 32R-7680538 incl, and PA-32-300 with serial numbers 32-7740001 and up
AG - Used on PA-32-260 with serial numbers 32-7300001 and up, PA-32-300 with serial numbers 32-7340001 and up, and PA-32R-300
AH - Used on PA-32-260 with serial numbers 32-7200029 and up, PA-32-300 with serial numbers 32-7240098 and up, and PA-32R-300
AJ - Used on PA-32-260 only
AK - Used on PA-32-260 with serial numbers 32-1111 to 32-7200028 incl, and PA-32-300 with serial numbers 32-40566 to 32-7240095 incl if lower door latch has been installed
AL - Used on PA-32-260 with serial numbers 32-451 and up, PA-32-300 with serial numbers 32-40000 and up, and PA-32R-300
AM - Used on PA-32-260 with serial numbers 32-451 to 32-1250 incl, and PA-32-300 with serial numbers 32-40000 to 32-40850 incl
AN - Used on PA-32-260 with serial numbers 32-451 to 1320 incl, and PA-32-300 with serial numbers 32-40000 to 32-41018 incl
AQ - Used on PA-32-260 with serial numbers 32-1 to 32-7300036 incl, and PA-32-300 with serial numbers 32-40000 to 32-7340111 incl
AP - Used on P-32-260 with serial numbers 32-7300037 to 32-7600001 incl, PA-32-300 with serial numbers 32-7340112 to 32-7640029 incl, and PA-32R-300 with serial numbers 32R-7680001 to 32R-7680013 incl
AQ - Used on PA-32-260 with serial numbers 32-7100001 to 32-7100038 incl, and PA-32-300 with serial numbers 32-7140001 to 32-7140086 incl
AR - Used on PA-32-260 with serial numbers 32-1111 to 32-1250 incl, and PA-32-300 with serial numbers 32-40566 to 32-40850 incl
AS - Used on PA-32-260 with serial numbers 32-7300001 to 32-7300076 incl, and PA-32-300 with serial numbers 32-7340001 to 32-7340201 incl
AT - Used on PA-32-260 with serial numbers 32-7400001 to 32-7600033 incl, PA-32-300 with serial numbers 32-7440001 to 32-7640142 incl, and PA-32R-300 with serial numbers 32R-7680001 to 32R-7680538 incl

CODE EXPLANATIONS FOR FIGURE 24 (cont.)

AU - Used on PA-32-260 with serial numbers 32-1111 to 32-7200055 incl., and PA-32-300 with serial numbers 32-40588 to 32-7240147 incl
AV - Used on PA-32-260 with serial numbers 32-1 to 32-7200055 incl., and PA-32-300 with serial numbers 32-40000 to 32-7240147 incl
AW - Used on PA-32-260 with serial numbers 32-7400001 to 32-7400061 incl., and PA-32-300 with serial numbers 32-7440001 to 32-7440182 incl
AX - Used if shoulder harness has been installed
AY - Used on PA-32-260 with serial numbers 32-1 to 32-7300076 incl., and PA-32-300 with serial numbers 32-40000 to 32-7340201 incl
AZ - Used on PA-32-260 serial numbers 32-1 to 32-7600001 incl., PA-32-300 with serial numbers 32-40000 to 32-7640029 incl., and PA-32R-300 with serial numbers 32R-7680001 to 32R-7680013 incl
BA - Used on PA-32-260 with serial numbers 32-1111 to 32-7400061 incl., and PA-32-300 with serial numbers 32-40566 to 32-7440182 incl
BB - Used on PA-32-260 with serial numbers 32-7500001 and up, PA-32-300 with serial numbers 32-7540001 and up, and PA-32R-300
BC - Used on PA-32-260 with serial numbers 32-1 to 32-1250 incl., and PA-32-300 with serial numbers 32-40000 to 32-40850 incl
BD - Used on PA-32-260 with serial numbers 32-7300016 and up, and PA-32-300 with serial numbers 32-7340064 and up
BE - Used on PA-32-260 with serial numbers 32-7300006 to 32-7600001 incl., PA-32-300 with serial numbers 32-7340039 to 32-7640029 incl., and PA-32R-300 with serial numbers 32R-7680001 to 32R-7680013 incl
BF - Used on PA-32-260 with serial numbers 32-1111 to 32-7300005 incl., and PA-32-300 with serial numbers 32-40566 to 32-7340038 incl if lower door latch has been installed
BG - Used on PA-32-260 with serial numbers 32-7300037 and up, PA-32-300 with serial numbers 32-7340082 and up, and PA-32R-300
BH - Used on PA-32-260 with serial numbers 32-1111 and up, PA-32-300 with serial numbers 32-40516 to 32-7940180 inclusive, and PA-32R-300
BJ - When ordering, specify color "bark II" or black
BK - Used on PA-32-260 with serial numbers 32-7200011 to 32-7200037 incl., and PA-32-300 with serial numbers 32-7240047 to 32-7240116 incl
BL - No longer available. Order part for PA-32-260 with serial numbers 32-7300037 and up, or part for PA-32-300 with serial numbers 32-7340082 and up if Fuel Selector Control Modification Kit has been installed per Service Bulletin 376. If Fuel Selector Control Modification Kit has not been installed per Service Bulletin 376 order Kit 760 685 for PA-32-260 with serial numbers 32-1 to 32-875 inclusive, or Kit 760 686 for PA-32-260 with serial numbers 32-876 to 32-1110 and PA-32-300 with serial numbers 32-40000 to 32-40565 inclusive, or Kit 760 687 for PA-32-260 with serial numbers 32-1111 to 32-1250 inclusive and PA-32-300 with serial numbers 32-40566 to 32-40850 inclusive, or Kit 760 688 for PA-32-260 with serial numbers 32-1251 to 32-7300036 inclusive and PA-32-300 with serial numbers 32-40851 to 32-7340081 inclusive
BM - No longer available. Order P/N 69652-10 blue, 69652-12 black or 69652-11 brown if Fuel Selector Control Modification Kit has been installed per Service Bulletin 376. If Fuel Selector Control Modification Kit has not been installed per Service Bulletin 376, order Kit 760 685 for PA-32-1 to 32-875 inclusive or Kit 760 686 for PA-32-260 with serial numbers 32-876 to 32-1110 and PA-32-300 with serial numbers 32-40000 to 32-40565 inclusive, or Kit 760 687 for PA-32-260 with serial numbers 32-1111 to 32-1250 inclusive and PA-32-300 with serial numbers 32-40566 to 32-40850 inclusive or Kit 760 688 for PA-32-260 with serial numbers 32-1251 to 32-7300036 inclusive and PA-32-300 with serial numbers 32-40851 to 32-7340081 inclusive
BN - Used on PA-32-260 with serial numbers 32-1251 to 32-7300036 incl., and PA-32-300 with serial numbers 32-40851 to 32-7340081 incl
BQ - Used on PA-32-260 with serial numbers 32-7300037 and up, and PA-32-300 with serial numbers 32-7340082 to 32-7640222 incl
BP - Used if air conditioning is installed
BQ - Used on PA-32-260 with serial numbers 32-1 to 32-1110 incl., and PA-32-300 with serial numbers 32-40456 to 32-40565 incl if Fuel Selector Control Modification Kit has been installed per Service Bulletin 376
BR - Used on PA-32-260 with serial numbers 32-876 to 32-1110 incl., and PA-32-300 with serial numbers 32-40456 to 32-40565 incl
BS - Used on PA-32-260 with serial numbers 32-7700002 and up, and PA-32-300 with serial numbers 32-7740004 and up
BT - Used on PA-32-260 with serial numbers 32-1 to 32-1110 incl., and PA-32-300 with serial numbers 32-40000 to 32-40565 incl. If Fuel Selector Control Modification Kit has been installed per Service Bulletin 376
BU - No longer available. Order Cover Assembly 69673-02 red, 69673-03 blue, 69673-04 black or 69673-05 brown if Fuel Selector Control Modification Kit has been installed per Service Bulletin 376. If Fuel Selector Control Modification Kit has not been installed per Service Bulletin 376, order Kit 760 685 for PA-32-260 with serial numbers 32-1 to 32-875 inclusive or Kit 760 686 for PA-32-260 with serial numbers 32-876 to 32-1110 inclusive and PA-32-300 with serial numbers 32-40000 to 32-40565 inclusive
BV - No longer available. Order P/N 69654-06 blue or 69654-08 brown if Fuel Selector Control Modification Kit has been installed per Service Bulletin 376. If Fuel Selector Control Modification Kit has not been installed per Service Bulletin 376, order Kit 760 687
BW - When ordering, specify color camel, olivetone, black, or seal. Specify color royal blue (color code 781) for PA-32-260 with serial numbers 32-7800001 and up, PA-32-300 with serial numbers 32-7840001 to 32-7940149 inclusive, and PA-32R-300 with serial numbers 32R-7880001 and up. Specify color dark blue (color code 795) for PA-32-300 with serial numbers 32-7940150 and up

CODE EXPLANATIONS FOR FIGURE 24 (cont.)

BX - See Figure 32B if aft facing center seats are installed.
BY - Used on PA-32-260 with serial numbers 32-1111 to 32-1320 incl., and PA-32-300 with serial numbers 32-40566 to 32-41018 incl. if Fuel Selector Control Modification Kit has been installed per Service Bulletin 376.
BZ - Used on PA-32-260 with serial numbers 32-1111 to 32-7300036 incl., and PA-32-300 with serial numbers 32-40566 to 32-7340081 incl..
CA - Used on PA-32-260 with serial numbers 32-876 to 32-7300036 incl., and PA-32-300 with serial numbers 32-40000 to 32-7340081 incl.
CB - Used on PA-32-260 with serial numbers 32-7300001 to 32-7400061 incl., and PA-32-300 with serial numbers 32-7140001 to 32-7440182 incl.
CC - Used on PA-32-260 with serial numbers 32-7300001 to 32-7400061 incl., and PA-32-300 with serial numbers 32-40566 to 32-7440182 incl.
CD - Used on PA-32-260 with serial numbers 32-1111 to 32-7200055 incl. if constant speed propeller has been installed.
CE - Used on PA-32-260 with serial numbers 32-7100001 to 32-7200055 incl. if constant speed propeller has been installed.
CF - Used on PA-32-300 with serial numbers 32-40566 to 32-40850 incl.
CG - Used on PA-32-260 with serial numbers 32-1111 to 32-1250 incl. if constant speed propeller has been installed.
CH - Used on PA-32-260 with serial numbers 32-7300001 to 32-7400061 incl., and PA-32-300 with serial numbers 32-40851 to 32-7440182 incl.
CJ - Used on PA-32-260 with serial numbers 32-1251 to 32-7200055 incl. if constant speed propeller has been installed.
CK - Used on PA-32-260 with serial numbers 32-1111 to 32-1320 incl. if constant speed propeller has been installed.
CL - Used on PA-32-260 with serial numbers 32-40566 to 32-41018 incl.
CM - Used on PA-32-260 with serial numbers 32-1111 to 32-1250 incl.
CN - Used on PA-32-260 with serial numbers 32-1251 to 32-7200055 incl., and PA-32-300 with serial numbers 32-40851 to 32-7240147 incl.
CO - Used on PA-32-260 with serial numbers 32-7100001 to 32-7200055 incl., and PA-32-300 with serial numbers 32-7140001 to 32-7240147 incl.
CP - Used on PA-32-260 with serial numbers 32-7500003 and up, PA-32-300 with serial numbers 32-7540029 and up, and PA-32R-300.
CQ - Used on PA-32-260 with serial numbers 32-1251 to 32-7400061 incl., and PA-32-300 with serial numbers 32-40851 to 32-7440182 incl.
CR - Used on PA-32-260 with serial numbers 32-854 to 32-7600001 incl., PA-32-300 with serial numbers 32-40266 to 32-7640029 incl., and PA-32R-300 with serial numbers 32R-7680001 to 32R-7680013 incl.
CS - Used on PA-32-260 with serial numbers 32-7600002 to 32-7600033 incl., PA-32-300 with serial numbers 32-7640030 to 32-7640142 incl., and PA-32R-300 with serial numbers 32R-7680014 to 32R-7680538 incl.
CT - Used on PA-32-260 with serial numbers 32-7500001 to 32-7600001 incl., PA-32-300 with serial numbers 32-7540001 to 32-7640029 incl., and PA-32R-300 with serial numbers 32R-7680001 to 32R-7680013 incl.
CU - Used on PA-32-300 only.
CV - Used on PA-32-260 with serial numbers 32-7700001 and up, and PA-32-300 with serial numbers 32-7740001 and up.
CW - Used on PA-32-260 with serial numbers 32-1111 to 32-7600033 incl., and PA-32-300 with serial numbers 32-40566 to 32-7640142 incl.
CX - Used on PA-32-260 with serial numbers 32-1251 to 32-7600021 incl., PA-32-300 with serial numbers 32-40851 to 32-7640114 incl., and PA-32R-300 with serial numbers 32R-7680001 to 32R-7680445 incl.
CY - Used on PA-32-300 with serial numbers 32-7640115 and up, and PA-32R-300 with serial numbers 32R-7680446 and up.
CZ - Used on PA-32-260 with serial numbers 32-7600022 and up, PA-32-300 with serial numbers 32-7640115 and up, and PA-32R-300 with serial numbers 32R-7680446 and up.
DA - Used on PA-32-260 with serial numbers 32-1 to 32-7400061 incl., and PA-32-300 with serial numbers 32-40000 to 32-7440182 incl.
DB - Used on PA-32-260 with serial numbers 32-1111 to 32-7600033 incl., PA-32-300 with serial numbers 32-40516 to 32-7640142 incl., and PA-32R-300 with serial numbers 32R-7680001 to 32R-7680538 incl.
DC - Used on PA-32-260 with serial numbers 32-7700001 and up, PA-32-300 with serial numbers 32-7740001 and up, and PA-32R-300 with serial numbers 32R-7780001 and up.
DD - Used on PA-32-260 with serial numbers 32-1 to 32-7600033 incl., PA-32-300 with serial numbers 32-40000 to 32-7640142 incl., and PA-32R-300 with serial numbers 32R-7680001 to 32R-7680538 incl.
DE - Used on PA-32-260 with serial numbers 32-7700002 and up, and PA-32-300 with serial numbers 32-7740004 and up. Specify color “bark I” for PA-32-260 with serial numbers 32-7700002 to 32-7700013 incl., and PA-32-300 with serial numbers 32-7740004 to 32-7740044 incl. Specify color “bark II” or black for PA-32-260 with serial numbers 32-7700014 and up, and PA-32-300 with serial numbers 32-7740045 and up.
DF - Used on PA-32-260 with serial numbers 32-7400001 and up, PA-32-300 with serial numbers 32-7440001 and up, and PA-32R-300 with serial numbers 32R-7680001 and up.
DG - Used on PA-32-260 with serial numbers 32-7700001 to 32-7700023 incl., PA-32-300 with serial numbers 32-7740001 to 32-7740113 incl., and PA-32R-300 with serial numbers 32R-7780001 to 32R-7780549 incl.
DH - Used on PA-32-260 with serial numbers 32-7800001 and up, PA-32-300 with serial numbers 32-7840001 and up, and PA-32R-300 with serial numbers 32R-7880001 and up.
DJ - Used on PA-32-260 with serial numbers 32-7100001 to 32-7400061 incl., and PA-32-300 with serial numbers 32-7140001 to 32-7440182 incl.

CODE EXPLANATIONS FOR FIGURE 24 (cont.)

DK - Used on PA-32-260 with serial numbers 32-7300037 to 32 7600033 incl., and PA-32-300 with serial numbers 32-7340082 to 32 7640142 incl

DL - Used on PA-32-260 with serial numbers 32-7300037 to 32 7400061 incl., and PA-32-300 with serial numbers 32-7340082 to 32 7440182 incl

DM - When ordering specify color black or bark. Specify color "bark I" for PA-32-260 with serial numbers 32-7700001 to 32-7700013 incl., PA-32-300 with serial numbers 32-7740001 to 32-7740044 incl., and PA-32R-300 with serial numbers 32R-7780001 to 32R-7780214 incl. Specify color "bark II" for PA-32-260 with serial numbers 32-7700014 and up, PA-32-300 with serial numbers 32-7740045 and up, and PA 32R 300 with serial numbers 32R-7780215 and up

DN - Used on PA-32R-300 with serial numbers 32R-7680073, 32R-7680166, 32R-7780001 and up

DO - Used on PA-32-260 with serial numbers 32-1111 to 32-7700001 incl., and PA-32 300 with serial numbers 32-40666 to 32-7740003 incl

DP - Used on PA-32-260 with serial numbers 32-7700002 and up, and PA-32-300 with serial numbers 32-7740004 and up

DQ - Used on PA-32-260 with serial numbers 32-1 to 32-7700001 incl., and PA-32-300 with serial numbers 32-40000 to 32-7740003 incl

DR - Used on PA 32-260 with serial numbers 32-1 to 32-7700001 incl., PA-32-300 with serial numbers 32-40000 to 32-7740003 incl., and PA 32R 300 with serial numbers 32R 7680001 to 32R-7780002 incl

DS - Used on PA-32-260 with serial numbers 32-7700002 and up, PA 32 300 with serial numbers 32-7740004 and up, and PA-32R-300 with serial numbers 32R-7780003 and up. Specify color "bark I" for PA-32-260 with serial numbers 32-7700002 to 32 7700013 incl., PA-32-300 with serial numbers 32-7740004 to 32-7740044 incl., and PA-32R-300 with serial numbers 32R-7780003 to 32R-7780214 incl. Specify color "bark II" or black for PA-32-260 with serial numbers 32-7700014 and up, PA-32-300 with serial numbers 32-7740045 and up, and PA-32R-300 with serial numbers 32R-7780125 and up

DT - When ordering for PA-32-260 with serial numbers 32 7700001 to 32 7700013 incl., PA-32 300 with serial numbers 32-7740001 to 32-7740044 incl., and PA-32R-300 with serial numbers 32R-7780001 to 32R-7780214 incl., specify color "bark I". When ordering for PA-32-260 with serial numbers 32-7700014 and up, PA-32-300 with serial numbers 32-7740045 and up, and PA-32R-300 with serial numbers 32R-7780215 and up, specify color "bark II" or black

DU - Used on PA-32R-300 only. When ordering for serial numbers 32R-7780001 to 32R-7780214 incl., specify color "bark I". When ordering for serial numbers 32R 7780215 and up, specify color "bark II" or black

DV - Used on PA-32-260 with serial numbers 32-7800001 and up, PA-32-300 with serial numbers 32-7840001 to 32-7940149 inclusive, and PA-32R-300 with serial numbers 32R-7880001 and up

DW - Used if air conditioning is not installed

PIPER PARTS CATALOG

Figure and Index Number	Part Number	Code	NOMENCLATURE	No. Req.	SERIAL NUMBERS AFFECTED
24-	68400	F	DRAWING - Cockpit Finishing Installation		
	69400	G	DRAWING - Cockpit Finishing Installation		
	69628	L	DRAWING - Cockpit Finishing Installation		
	69110	A,F	DRAWING - Cargo Door Cockpit Finishing Installation		
	69405	A,G	DRAWING - Cargo Door Cockpit Finishing Installation		
	69629	A,D	DRAWING - Cargo Door Cockpit Finishing Installation		
	69974	DC	DRAWING - Cockpit Finishing Installation		
	68578	M	DRAWING - Fwd. Bag. Compartment Finishing Installation		
	38165	N	DRAWING - Fwd. Bag. Compartment Finishing Installation		
-1	99458-00	M	BAR ASSEMBLY - Tow	1	
	67336-00	N	BAR ASSEMBLY - Tow	1	32R-7680001 to 32R-7680538
	69975-02	N	BAR ASSEMBLY - Tow	1	32R-7780001 and up
-2	63131-10	B	COVER ASSEMBLY - Red	2	
	65674-07	C	COVER ASSEMBLY - Red	2	
	63131-08	B	COVER ASSEMBLY - Blue	2	
	65674-06	C	COVER ASSEMBLY - Blue	2	
	66615-03	J	COVER ASSEMBLY - Blue	2	
	63131-00	B	COVER ASSEMBLY - Brown	2	
	65674-05	C	COVER ASSEMBLY - Brown	2	
	66615-02	DB	COVER ASSEMBLY - Brown	2	
	66615-14	E,X	COVER ASSEMBLY	2	
-3	68420-02	O	COVER ASSEMBLY - Red	2	
	68420-04	O	COVER ASSEMBLY - Blue	2	
	68420-03	O	COVER ASSEMBLY - Brown	2	
-4	68421-02	U	COVER ASSEMBLY - Red	1	
	68421-04	U	COVER ASSEMBLY - Blue	1	
	68421-03	U	COVER ASSEMBLY - Brown	1	
	68421-08	U	COVER ASSEMBLY - Black	1	
	68421-10	Q	COVER ASSEMBLY - Green	1	
	69596-02	V	COVER ASSEMBLY - Red	1	
	69596-03	DJ	COVER ASSEMBLY - Brown	1	
	69596-05	V	COVER ASSEMBLY - Black	1	
	69596-06	V	COVER ASSEMBLY - Green	1	
	69596-12	V	COVER ASSEMBLY - Blue/green	1	
	69596-14	DC,DT	COVER ASSEMBLY	1	
	38178-02	N,X	COVER ASSEMBLY - Forward tunnel	1	32R-7680001 to 32R-7680538
-5	63940-03	F	COVER ASSEMBLY - Tee bar, red	1	
	63940-05	F	COVER ASSEMBLY - Tee bar, blue	1	
	63940-04	F	COVER ASSEMBLY - Tee bar, brown	1	
	63940-06	P	COVER ASSEMBLY - Tee bar, beige	1	
-6	68404-00	R	COVER - Cowl	1	
	69099-00	S	COVER - Cowl	1	
	69368-00	T	COVER - Cowl	1	
-7	68687-03	DA	COVER - Trim, brown	1	
	69687-04	U	COVER - Trim, blue	1	
	36551-02	DM	COVER - Trim	1	
-8	68687-06	DA	COVER - Trim, brown	1	
	68687-07	U	COVER - Trim, blue	1	
	36551-03	DM	COVER -	1	
-9	63147-02	F	STRAP ASSEMBLY - Baggage tie down, brown (tip end)	2	
	63147-04	F	STRAP ASSEMBLY - Baggage tie down, gray (tip end)	2	
	66804-00	T	STRAP ASSEMBLY - Baggage tie down, black (tip end)		

PIPER PARTS CATALOG

Figure and Index Number	Part Number	Code	NOMENCLATURE	No Req.	SERIAL NUMBERS AFFECTED
24-10	63148-02	F	STRAP ASSEMBLY - Baggage tie down, brown (buckle end)	2	
	63148-05	F	STRAP ASSEMBLY - Baggage tie down, gray (buckle end)	2	
	66805-00	T	STRAP ASSEMBLY - Baggage tie down, black (buckle end)	2	
-11	68401-00		BULKHEAD ASSEMBLY - Hat shelf	1	32-1 to 32-875 inclusive
	68401-09	Y	BULKHEAD ASSEMBLY - Hat shelf	1	
	79837-02	BH DW	BULKHEAD ASSEMBLY - Hat shelf	1	
	36589-04	BH BP	BULKHEAD ASSEMBLY - Hat shelf	1	
	79837-02	CU	BULKHEAD ASSEMBLY - Hat shelf	1	32-7840181 and up
-12	467 629	W	* STUD - Coat hanger (KM894-1A)	2	
-12a	96272-00		PLACARD - Baggage limitations	1	
-12b	79445-00		DOOR ASSEMBLY - Rear bulkhead	1	
-13	419 693	W	SCREW - (8 x 5/8 L)	19	
	494 003	W	WASHER - (8 Finishing)	19	
-14	63287-00		PLATE - Tunnel	1	
15	68209-00	M	PLATE - Tunnel	1	
	68209-02	N	PLATE - Tunnel	1	
-16	79440-02	AA	PLATE - Seat attachment	4	
-17	68094-03		PLATE - Seat attachment	8	
-17a	79781-02	CV	PLATE ASSEMBLY - Seat foot	4	
-18	68610-00		TRIM PLATE	1	
-19	63900-28		BUSHING - Baggage tie down	4	
-20	68090-04	U	CHANNEL - Seat trim, left rear, blue	1	
	68090-05	U	CHANNEL - Seat trim, right rear, blue	1	
	68090-06	DA	CHANNEL - Seat trim, left rear, brown	1	
	68090-07	DA	CHANNEL - Seat trim, right rear, brown	1	
	68090-16	X	CHANNEL - Seat trim, left rear	1	
	68090-17	X	CHANNEL - Seat trim, right rear	1	
-21	68091-04	U	CHANNEL - Seat trim, left center, blue	1	
	68091-05	U	CHANNEL - Seat trim, right center, blue	1	
	68091-06	DA	CHANNEL - Seat trim, left center, brown	1	
	68091-07	DA	CHANNEL - Seat trim, right center, brown	1	
	68091-14	X,DD	CHANNEL - Seat trim, left center	1	
	68091-15	X,DD	CHANNEL - Seat trim, right center	1	
	79681-02	DC BJ	CHANNEL - Seat trim, left center	1	
	79681-03	DC BJ	CHANNEL - Seat trim, right center	1	
-22	68093-00	AA	CLIP - Seat	8	
-23	68495-00		BLANKET - Cabin	1	
-24	62827-07		SHIELD - Flap handle cover	1	
-25	467 560	W	STUD - (MX10382-12)	3	
-26	454 838	M	CLIP - Tow bar (225 L)	2	
	454 838	N	CLIP - Tow bar (255 L)	2	32R-7680001 to 32R-7680538 incl
	564 763	N	CLIP - Tow bar (225 XL)	2	32R-7780001 and up
-27	401 268	W	BOLT - (AN3-5A)	4	
	407 564	W	WASHER - (AN960-10L)	4	
-28	78735-02	CU	COVER - Rudder pedal stop bracket	2	32-7940168 and up
29	473 185	F	LOUVER - Exhaust vent (4")	2	
	66788-02	T	COVER - Cabin air, brown	2	
	66788-04	AC	COVER - Cabin air, blue	2	
	98767-00	AE	COVER - Cabin air	1	
	66788-14	T,X	COVER - Cabin air	2	
30	68580-00	F	PANEL - Firewall, forward baggage	1	
	68429-00	DD	PANEL - Firewall, forward baggage	1	
	580 760	BS	PANEL - Firewall, forward baggage, camel	1	
	579 515	CU	PANEL - Firewall, forward baggage, olivetone	1	32-7840001 and up
	579 516	CU	PANEL - Firewall, forward baggage, royal blue	1	32-7840001 and up
	579 517	CU	PANEL - Firewall, forward baggage, black	1	32-7840001 and up
	579 518	CU	PANEL - Firewall, forward baggage, seal	1	32-7840001 and up

When ordering, always specify Part Number, Description and Serial Number of Aircraft

PIPER PARTS CATALOG

Figure and Index Number	Part Number	Code	NOMENCLATURE	No. Req.	SERIAL NUMBERS AFFECTED
24-30	38182-00	N	PANEL - Firewall, forward baggage	1	32R-7680001 to 38R-7780002
	580 761	N	PANEL - Firewall, forward baggage, camel	1	32R-7780003 and up
	579 500	N	PANEL - Firewall, forward baggage, olivetone	1	32R-7880001 and up
	579 501	N	PANEL - Firewall, forward baggage, royal blue	1	32R-7880001 and up
	579 502	N	PANEL - Firewall, forward baggage, black	1	32R-7880001 and up
	579 503	N	PANEL - Firewall, forward baggage, seal	1	32R-7880001 and up
-31	68583-00	F	PANEL ASSEMBLY - Bulkhead, forward baggage	1	
	69428-00	DO	PANEL ASSEMBLY - Bulkhead, forward baggage	1	
	69428-05	DP,BW	PANEL ASSEMBLY - Bulkhead, forward baggage	1	
	38183-00	N	PANEL ASSEMBLY - Bulkhead, forward baggage	1	32R-7680001 to 32R-7780002
	38183-04	N,BW	PANEL ASSEMBLY - Bulkhead, forward baggage	1	32R-7780003 and up
-32	68646-00	DQ	PANEL - Forward baggage compartment	1	
	68646-02	DE	PANEL - Forward baggage compartment	1	
	38188-00	DU	PANEL - Forward baggage compartment	1	32R-7680001 to 32R-7780002
	38188-04	DU	PANEL - Forward baggage compartment	1	322R-7780003 and up
-33	68662-00	DQ	PANEL ASSEMBLY - Battery compartment	1	
	68662-03	DE	PANEL ASSEMBLY - Battery compartment	1	
	38186-00	DU	PANEL ASSEMBLY - Battery compartment	1	32R-7680001 to 32R-7780002
	38186-02	DU	PANEL ASSEMBLY - Battery compartment	1	32R-7780003 and up
-34	69669-148		PLACARD - Baggage limitations	1	
-35	68633-05	DS	HEADLINER - Baggage compartment, left	1	32-7700001 and up
	68633-06	AB,DS	HEADLINER - Baggage compartment, right	1	
	68633-07	DR	HEADLINER - Baggage compartment, right	1	32-7740001 and up
	68633-09	DS	HEADLINER - Baggage compartment, right	1	
-36	63118-00	B	SILL - Door, forward cabin	1	
	65546-00	CR	SILL - Door, forward cabin	1	
	65546-04	CS	SILL - Door, forward cabin	1	
-37	68424-00	B	SILL - Door, aft cabin	1	
	69188-03	AD	SILL - Door, aft cabin	1	
-38	68415-00		PLATE - Aft tunnel cover	1	
-39	99464-00	AG	BUTTON - Plug	1	
-40	96866-00	AH,AK	PLATE - Striker	1	
-41	68416-00		VENT ASSEMBLY - Forward, left (complete)	1	
	68416-01		VENT ASSEMBLY - Forward, right (complete)	1	
	68556-00		VENT ASSEMBLY - Aft, left (complete)	1	
	68556-01		VENT ASSEMBLY - Aft, right (complete)	1	
-42	68671-00		* VALVE ASSEMBLY - Butterfly	1	
-43	68499-04		* SHAFT ASSEMBLY - Valve, left	1	
	68499-05		* SHAFT ASSEMBLY - Valve, right	1	
-44	68574-02	AJ	COVER ASSEMBLY - Forward vent, left, red	1	32-1 to 32-47 inclusive
	68574-03	AJ	COVER ASSEMBLY - Forward vent, left, brown	1	32-1 to 32-47 inclusive
	68574-04	AJ	COVER ASSEMBLY - Forward vent, left, blue	1	32-1 to 32-47 inclusive
	68574-05	AJ	COVER ASSEMBLY - Forward vent, right, red	1	32-1 to 32-47 inclusive
	68574-06	AJ	COVER ASSEMBLY - Forward vent, right, brown	1	32-1 to 32-47 inclusive
	68574-07	AJ	COVER ASSEMBLY - Forward vent, right, blue	1	32-1 to 32-47 inclusive
	68574-08	AJ	COVER ASSEMBLY - Aft vent, left, red	1	32-1 to 32-47 inclusive
	68574-09	AJ	COVER ASSEMBLY - Aft vent, left, brown	1	32-1 to 32-47 inclusive
	68574-10	AJ	COVER ASSEMBLY - Aft vent, left, blue	1	32-1 to 32-47 inclusive
	68574-11	AJ	COVER ASSEMBLY - Aft vent, right, red	1	32-1 to 32-47 inclusive
	68574-12	AJ	COVER ASSEMBLY - Aft vent, right, brown	1	32-1 to 32-47 inclusive
	68574-13	AJ	COVER ASSEMBLY - Aft vent, right, blue	1	32-1 to 32-47 inclusive
	68733-02	AJ	COVER - Air vent, red	4	32-48 to 32-450 inclusive

Figure and Index Number	Part Number	Code	NOMENCLATURE	No. Req.	SERIAL NUMBERS AFFECTED
24-44	68733-03	AJ	COVER - Air vent, brown	4	32-48 to 32-460 inclusive
	68733-04	AJ	COVER - Air vent, blue	4	32-48 to 32-460 inclusive
	65736-06	AM	COVER - Air vent, brown	4	
	65736-07	AN	COVER - Air vent, blue	4	
	65736-18	X,AL	COVER - Air vent	4	
	65736-13	CQ	COVER - Air vent, white	4	
-45	63142-02	AZ	TRIM STRIP - Forward cabin door	1	
	63142-56	CS	TRIM STRIP - Forward cabin door	1	
-45	63142-13	AO	TRIM STRIP - Forward cabin door	1	
	63142-45	AP	TRIM STRIP - Forward cabin door	1	
	63142-55	CS	TRIM STRIP - Forward cabin door	1	
-47	63142-14	AO	TRIM STRIP - Forward cabin door	1	
	63142-48	AP	TRIM STRIP - Forward cabin door	1	
	63142-50	CS	TRIM STRIP - Forward cabin door	1	
-48	63142-15	F	TRIM STRIP - Left side	1	
-49	63142-16	F	TRIM STRIP - Right side	1	
-50	63142-17	F	TRIM STRIP - Right side	1	
-51	63142-18	F	TRIM STRIP - Right side	1	
-52	63142-19	AV	TRIM STRIP - Aft cabin door	1	
-53	63142-20	AV	TRIM STRIP - Aft cabin door	1	
	63142-33	A	TRIM STRIP - Aft cabin door and cargo door	1	
-54	63142-21		TRIM STRIP - Aft cabin door	1	
-55	68449-03	F	WINDLACING - Aft cabin door, white	1	
	69403-02	AU	WINDLACING - Aft cabin door, white	1	
	68968-03	F	WINDLACING - Aft cabin door and cargo door, white	1	
	68969-05	T	WINDLACING - Aft cabin door and cargo door, white	1	
-56	65564-02	F	WINDLACING - Forward cabin door	1	
	69403-03	T	WINDLACING - Forward cabin door	1	
-57	68456-02	F	PANEL ASSEMBLY - Left front cockpit, red	1	
	69412-02	AR	PANEL ASSEMBLY - Left front cockpit, red	1	
	69557-02	Q	PANEL ASSEMBLY - Left front cockpit, red	1	
	99231-02	AQ	PANEL ASSEMBLY - Left front cockpit, red	1	
	99231-09	L	PANEL ASSEMBLY - Left front cockpit, red	1	
	580 414	AS	PANEL ASSEMBLY - Left front cockpit, red	1	
	579 807	AT	PANEL ASSEMBLY - Left front cockpit, red	1	
	68456-03	F	PANEL ASSEMBLY - Left front cockpit, brown	1	
	69412-03	AR	PANEL ASSEMBLY - Left front cockpit, brown	1	
	68456-04	F	PANEL ASSEMBLY - Left front cockpit, blue	1	
	69412-04	AR	PANEL ASSEMBLY - Left front cockpit, blue	1	
	69557-03	Q	PANEL ASSEMBLY - Left front cockpit, blue	1	
	99231-03	AQ	PANEL ASSEMBLY - Left front cockpit, blue	1	
	99231-09	L	PANEL ASSEMBLY - Left front cockpit, blue/green	1	
	580 415	AS	PANEL ASSEMBLY - Left front cockpit, blue/green	1	
	579 808	AT	PANEL ASSEMBLY - Left front cockpit, blue/green	1	
	68456-05	F	PANEL ASSEMBLY - Left front cockpit, beige	1	
	69412-05	AR	PANEL ASSEMBLY - Left front cockpit, beige	1	
	69557-04	Q	PANEL ASSEMBLY - Left front cockpit, beige	1	
	99231-04	AQ	PANEL ASSEMBLY - Left front cockpit, beige	1	
	99231-10	L	PANEL ASSEMBLY - Left front cockpit, gold	1	
	580 416	AS	PANEL ASSEMBLY - Left front cockpit, gold	1	
	579 806	AT	PANEL ASSEMBLY - Left front cockpit, gold	1	
	69412-06	AR	PANEL ASSEMBLY - Left front cockpit, black	1	
	69557-06	Q	PANEL ASSEMBLY - Left front cockpit, black	1	
	99231-06	AQ	PANEL ASSEMBLY - Left front cockpit, black	1	
	99231-11	L	PANEL ASSEMBLY - Left front cockpit, black	1	
	580 417	AS	PANEL ASSEMBLY - Left front cockpit, black	1	
	579 804	AT	PANEL ASSEMBLY - Left front cockpit, black	1	

PIPER PARTS CATALOG

Figure and Index Number	Part Number	Code	NOMENCLATURE	No. Req.	SERIAL NUMBERS AFFECTED
24 57	69557-06	Q	PANEL ASSEMBLY - Left front cockpit, green	1	
	99231-07	AQ	PANEL ASSEMBLY - Left front cockpit, green	1	
	99231-13	L	PANEL ASSEMBLY - Left front cockpit, green	1	
	580 419	AS	PANEL ASSEMBLY - Left front cockpit, green	1	
	579 802	AT	PANEL ASSEMBLY - Left front cockpit, green	1	
	69557-07	Q	PANEL ASSEMBLY - Left front cockpit, white	1	
	99231-06	AQ	PANEL ASSEMBLY - Left front cockpit, white	1	
	99231-12	L	PANEL ASSEMBLY - Left front cockpit, white	1	
	580 418	AS	PANEL ASSEMBLY - Left front cockpit, white	1	
	579 803	AW	PANEL ASSEMBLY - Left front cockpit, white	1	
	579 401	DC	PANEL ASSEMBLY - Left front cockpit, white/camel/black (with heather carpet)	1	
	580 732	DG	PANEL ASSEMBLY - Left front cockpit, white/camel/black (with monaco carpet)	1	
	579 523	DH	PANEL ASSEMBLY - Left front cockpit, olivetone (with palm carpet)	1	
	579 524	DV	PANEL ASSEMBLY - Left front cockpit, midnight blue (with royal blue carpet)	1	
	579 307	CU	PANEL ASSEMBLY - Left front cockpit, dark blue (with royal blue carpet)	1	32-7940150 and up
	579 525	DH	PANEL ASSEMBLY - Left front cockpit, raspberry/black (with raspberry carpet)	1	
	579 526	DH	PANEL ASSEMBLY - Left front cockpit, tan/seal (with brown carpet)	1	
58	68457-02	F	PANEL ASSEMBLY - Left center cockpit, red	1	
	69413-02	AR	PANEL ASSEMBLY - Left center cockpit, red	1	
	69558-02	Q	PANEL ASSEMBLY - Left center cockpit, red	1	
	99232-02	AQ	PANEL ASSEMBLY - Left center cockpit, red	1	
	99232-08	L	PANEL ASSEMBLY - Left center cockpit, red	1	
	580 420	AS	PANEL ASSEMBLY - Left center cockpit, red	1	
	579 801	AT	PANEL ASSEMBLY - Left center cockpit, red	1	
	68457-03	F	PANEL ASSEMBLY - Left center cockpit, brown	1	
	69413-03	AR	PANEL ASSEMBLY - Left center cockpit, brown	1	
	68457-04	F	PANEL ASSEMBLY - Left center cockpit, blue	1	
	69413-04	AR	PANEL ASSEMBLY - Left center cockpit, blue	1	
	69558-03	Q	PANEL ASSEMBLY - Left center cockpit, blue	1	
	99232-03	AQ	PANEL ASSEMBLY - Left center cockpit, blue	1	
	99232-09	L	PANEL ASSEMBLY - Left center cockpit, blue/green	1	
	580 421	AS	PANEL ASSEMBLY - Left center cockpit, blue/green	1	
	579 800	AT	PANEL ASSEMBLY - Left center cockpit, blue/green	1	
	68457-05	F	PANEL ASSEMBLY - Left center cockpit, beige	1	
	69413-05	AR	PANEL ASSEMBLY - Left center cockpit, beige	1	
	69558-04	Q	PANEL ASSEMBLY - Left center cockpit, beige	1	
	99232-04	AQ	PANEL ASSEMBLY - Left center cockpit, beige	1	
	99232-10	L	PANEL ASSEMBLY - Left center cockpit, beige	1	
	580 422	AS	PANEL ASSEMBLY - Left center cockpit, gold	1	
	579 799	AT	PANEL ASSEMBLY - Left center cockpit, gold	1	
	69413-06	AR	PANEL ASSEMBLY - Left center cockpit, black	1	
	69558-05	Q	PANEL ASSEMBLY - Left center cockpit, black	1	
	99232-05	AQ	PANEL ASSEMBLY - Left center cockpit, black	1	
	99232-11	L	PANEL ASSEMBLY - Left center cockpit, black	1	
	580 423	AS	PANEL ASSEMBLY - Left center cockpit, black	1	
	579 798	AT	PANEL ASSEMBLY - Left center cockpit, black	1	
	69558-06	Q	PANEL ASSEMBLY - Left center cockpit, green	1	
	99232-07	AQ	PANEL ASSEMBLY - Left center cockpit, green	1	
	99232-13	L	PANEL ASSEMBLY - Left center cockpit, green	1	
	580 425	AS	PANEL ASSEMBLY - Left center cockpit, green	1	
	579 796	AT	PANEL ASSEMBLY - Left center cockpit, green	1	

When ordering, always specify Part Number, Description and Serial Number of Aircraft

PIPER PARTS CATALOG

Figure and Index Number	Part Number	Code	NOMENCLATURE	No Req	SERIAL NUMBERS AFFECTED
24-58	69558-07	Q	PANEL ASSEMBLY - Left center cockpit, white	1	
	99232-06	AQ	PANEL ASSEMBLY - Left center cockpit, white	1	
	99232-12	L	PANEL ASSEMBLY - Left center cockpit, white	1	
	580 424	AS	PANEL ASSEMBLY - Left center cockpit, white	1	
	579 787	AW	PANEL ASSEMBLY - Left center cockpit, white	1	
	579 403	DC	PANEL ASSEMBLY - Left center cockpit, white/camel/black	1	
	579 537	DH	PANEL ASSEMBLY - Left center cockpit, olivetone	1	
	579 532	DV	PANEL ASSEMBLY - Left center cockpit, midnight blue	1	
	579 308	CU	PANEL ASSEMBLY - Left center cockpit, dark blue	1	32-7940160 and up
	579 533	DH	PANEL ASSEMBLY - Left center cockpit, raspberry/black	1	
	579 534	DH	PANEL ASSEMBLY - Left center cockpit, tan/seal	1	
-59	68459-02	F	PANEL ASSEMBLY - Left rear cockpit, red	1	
	69415-02	AR	PANEL ASSEMBLY - Left rear cockpit, red	1	
	69559-02	Q	PANEL ASSEMBLY - Left rear cockpit, red	1	
	99233-02	AQ	PANEL ASSEMBLY - Left rear cockpit, red	1	
	99233-08	L	PANEL ASSEMBLY - Left rear cockpit, red	1	
	68459-03	F	PANEL ASSEMBLY - Left rear cockpit, brown	1	
	69415-03	AR	PANEL ASSEMBLY - Left rear cockpit, brown	1	
	68459-04	F	PANEL ASSEMBLY - Left rear cockpit, blue	1	
	68415-04	AR	PANEL ASSEMBLY - Left rear cockpit, blue	1	
	69559-03	Q	PANEL ASSEMBLY - Left rear cockpit, blue		
	99233-03	AQ	PANEL ASSEMBLY - Left rear cockpit, blue	1	
	99233-09	L	PANEL ASSEMBLY - Left rear cockpit, blue/green	1	
	68459-05	P	PANEL ASSEMBLY - Left rear cockpit, beige	1	
	69415-05	AR	PANEL ASSEMBLY - Left rear cockpit, beige	1	
	69559-04	Q	PANEL ASSEMBLY - Left rear cockpit, beige	1	
	99233-04	AQ	PANEL ASSEMBLY - Left rear cockpit, beige	1	
	99233-10	L	PANEL ASSEMBLY - Left rear cockpit, beige	1	
	68415-06	AR	PANEL ASSEMBLY - Left rear cockpit, black	1	
	69559-05	Q	PANEL ASSEMBLY - Left rear cockpit, black	1	
	99233-05	AQ	PANEL ASSEMBLY - Left rear cockpit, black	1	
	99233-11	L	PANEL ASSEMBLY - Left rear cockpit, black	1	
	69559-06	Q	PANEL ASSEMBLY - Left rear cockpit, green	1	
	99233-07	AQ	PANEL ASSEMBLY - Left rear cockpit, green	1	
	99233-13	L	PANEL ASSEMBLY - Left rear cockpit, green	1	
	69559-07	Q	PANEL ASSEMBLY - Left rear cockpit, white	1	
	99233-06	AQ	PANEL ASSEMBLY - Left rear cockpit, white	1	
	99233-12	L	PANEL ASSEMBLY - Left rear cockpit, white	1	
-60	68460-02	F	PANEL ASSEMBLY - Right front cockpit, red	1	
	69416-02	AR	PANEL ASSEMBLY - Right front cockpit, red	1	
	69582-02	Q	PANEL ASSEMBLY - Right front cockpit, red	1	
	99235-02	AQ	PANEL ASSEMBLY - Right front cockpit, red	1	
	99235-08	L	PANEL ASSEMBLY - Right front cockpit, red	1	
	580 444	AS	PANEL ASSEMBLY - Right front cockpit, red	1	
	579 789	AW	PANEL ASSEMBLY - Right front cockpit, red	1	
	579 667	CT	PANEL ASSEMBLY - Right front cockpit, red	1	
	579 597	CS	PANEL ASSEMBLY - Right front cockpit, red	1	
	68460-03	F	PANEL ASSEMBLY - Right front cockpit, brown	1	
	69416-03	AR	PANEL ASSEMBLY - Right front cockpit, brown	1	
	68460-04	F	PANEL ASSEMBLY - Right front cockpit, blue	1	
	69416-04	AR	PANEL ASSEMBLY - Right front cockpit, blue	1	
	69582-03	Q	PANEL ASSEMBLY - Right front cockpit, blue	1	
	99235-03	AQ	PANEL ASSEMBLY - Right front cockpit, blue	1	
	99235-09	L	PANEL ASSEMBLY - Right front cockpit, blue/green	1	
	580 445	AS	PANEL ASSEMBLY - Right front cockpit, blue/green	1	
	579 788	AW	PANEL ASSEMBLY - Right front cockpit, blue/green	1	
	579 668	CT	PANEL ASSEMBLY - Right front cockpit, blue/green	1	
	579 598	CS	PANEL ASSEMBLY - Right front cockpit, blue/green	1	

When ordering, always specify Part Number, Description and Serial Number of Aircraft

PIPER PARTS CATALOG

Figure and Index Number	Part Number	Code	NOMENCLATURE	No Req.	SERIAL NUMBERS AFFECTED
24 60	68460-05	P	PANEL ASSEMBLY Right front cockpit, beige	1	
	69416-05	AR	PANEL ASSEMBLY - Right front cockpit, beige	1	
	69582 04	Q	PANEL ASSEMBLY - Right front cockpit, beige	1	
	99235-04	AQ	PANEL ASSEMBLY - Right front cockpit, beige	1	
	99235-10	L	PANEL ASSEMBLY - Right front cockpit, beige	1	
	580 446	AS	PANEL ASSEMBLY - Right front cockpit, gold	1	
	579 787	AW	PANEL ASSEMBLY - Right front cockpit, gold	1	
	579 669	CT	PANEL ASSEMBLY Right front cockpit, gold	1	
	579 589	CS	PANEL ASSEMBLY - Right front cockpit, gold	1	
	69416-06	AR	PANEL ASSEMBLY - Right front cockpit, black	1	
	69582 05	Q	PANEL ASSEMBLY - Right front cockpit black	1	
	99235-05	AQ	PANEL ASSEMBLY Right front cockpit black	1	
	99235-11	L	PANEL ASSEMBLY - Right front cockpit, black	1	
	580 447	AS	PANEL ASSEMBLY - Right front cockpit, black	1	
	579 788	AW	PANEL ASSEMBLY - Right front cockpit, black	1	
	579 670	CT	PANEL ASSEMBLY - Right front cockpit, black	1	
	579 600	CS	PANEL ASSEMBLY Right front cockpit, black	1	
	69582-06	Q	PANEL ASSEMBLY - Right front cockpit, green	1	
	99235-07	AQ	PANEL ASSEMBLY - Right front cockpit, green	1	
	99235-13	L	PANEL ASSEMBLY - Right front cockpit, green	1	
	580 449	AS	PANEL ASSEMBLY - Right front cockpit, green	1	
	579 784	AW	PANEL ASSEMBLY Right front cockpit, green	1	
	579 672	CT	PANEL ASSEMBLY - Right front cockpit, green	1	
	579 601	CS	PANEL ASSEMBLY - Right front cockpit, green	1	
	69582-07	Q	PANEL ASSEMBLY - Right front cockpit, white	1	
	99235-06	AQ	PANEL ASSEMBLY - Right front cockpit, white	1	
	99235-12	L	PANEL ASSEMBLY - Right front cockpit, white	1	
	580 448	AS	PANEL ASSEMBLY - Right front cockpit, white	1	
	579 785	AW	PANEL ASSEMBLY - Right front cockpit, white	1	
	579 406	DC	PANEL ASSEMBLY - Right front cockpit, white/camel/black (with leather carpet)	1	
	580 734	DG	PANEL ASSEMBLY - Right front cockpit, white/camel/black (with monaco carpet)	1	
	579 539	DH	PANEL ASSEMBLY - Right front cockpit, olivetone (with palm carpet)	1	
	579 540	DV	PANEL ASSEMBLY - Right front cockpit, midnight blue (with royal blue carpet)	1	
	579 311	CU	PANEL ASSEMBLY - Right front cockpit, dark blue (with royal blue carpet)	1	32-7940150 and up
	579 541	DH	PANEL ASSEMBLY - Right front cockpit, raspberry/black (with raspberry carpet)	1	
	579 542	DH	PANEL ASSEMBLY - Right front cockpit, tan/seal (with brown carpet)	1	
-61	68473-03	P	PANEL ASSEMBLY - Right center cockpit, red	1	
	69418-02	AR	PANEL ASSEMBLY - Right center cockpit, red	1	
	69560-02	Q	PANEL ASSEMBLY Right center cockpit, red	1	
	99236-02	AQ	PANEL ASSEMBLY - Right center cockpit, red	1	
	99236-08	L	PANEL ASSEMBLY - Right center cockpit, red	1	
	580 456	AS	PANEL ASSEMBLY - Right center cockpit, red	1	
	579 777	AT	PANEL ASSEMBLY - Right center cockpit, red	1	
	68473-03	P	PANEL ASSEMBLY - Right center cockpit, brown	1	
	69418-03	AR	PANEL ASSEMBLY - Right center cockpit, brown	1	
	68473-04	P	PANEL ASSEMBLY - Right center cockpit, blue	1	
	69418-04	AR	PANEL ASSEMBLY Right center cockpit, blue	1	
	69560-03	Q	PANEL ASSEMBLY - Right center cockpit, blue	1	
	99236-03	AQ	PANEL ASSEMBLY - Right center cockpit, blue	1	
	99236-09	L	PANEL ASSEMBLY - Right center cockpit, blue/green	1	
	580 457	AS	PANEL ASSEMBLY Right center cockpit, blue/green	1	
	579 776	AT	PANEL ASSEMBLY - Right center cockpit, blue/green	1	

When ordering, always specify Part Number, Description and Serial Number of Aircraft

PIPER PARTS CATALOG

Figure and Index Number	Part Number	Code	NOMENCLATURE	No. Req	SERIAL NUMBERS AFFECTED
24-61	68473-05	P	PANEL ASSEMBLY - Right center cockpit, beige	1	
	69418-05	AR	PANEL ASSEMBLY - Right center cockpit, beige	1	
	69560-04	Q	PANEL ASSEMBLY - Right center cockpit, beige	1	
	99236-04	AQ	PANEL ASSEMBLY - Right center cockpit, beige	1	
	99236-10	L	PANEL ASSEMBLY - Right center cockpit, beige	1	
	580 458	AS	PANEL ASSEMBLY - Right center cockpit, gold	1	
	579 776	AT	PANEL ASSEMBLY - Right center cockpit, gold	1	
	69418-06	AR	PANEL ASSEMBLY - Right center cockpit, black	1	
	69560-05	Q	PANEL ASSEMBLY - Right center cockpit, black	1	
	99236-05	AQ	PANEL ASSEMBLY - Right center cockpit, black	1	
	99236-11	L	PANEL ASSEMBLY - Right center cockpit, black	1	
	580 459	AS	PANEL ASSEMBLY - Right center cockpit, black	1	
	579 774	AT	PANEL ASSEMBLY - Right center cockpit, black	1	
	69560-06	Q	PANEL ASSEMBLY - Right center cockpit, green	1	
	99236-07	AQ	PANEL ASSEMBLY - Right center cockpit, green	1	
	99236-13	L	PANEL ASSEMBLY - Right center cockpit, green	1	
	580 461	AS	PANEL ASSEMBLY - Right center cockpit, green	1	
	579 777	AT	PANEL ASSEMBLY - Right center cockpit, green	1	
	69560-07	Q	PANEL ASSEMBLY - Right center cockpit, white	1	
	99236-06	AQ	PANEL ASSEMBLY - Right center cockpit, white	1	
	99236-12	L	PANEL ASSEMBLY - Right center cockpit, white	1	
	580 460	AS	PANEL ASSEMBLY - Right center cockpit, white	1	
	579 773	AW	PANEL ASSEMBLY - Right center cockpit, white	1	
	579 407	DC	PANEL ASSEMBLY - Right center cockpit, white/camel/black	1	
	579 547	DH	PANEL ASSEMBLY - Right center cockpit, elevations	1	
	579 548	DV	PANEL ASSEMBLY - Right center cockpit, midnight blue	1	
	579 313	CU	PANEL ASSEMBLY - Right center cockpit, dark blue	1	32-7940150 and up
	579 549	DH	PANEL ASSEMBLY - Right center cockpit, raspberry/black	1	
	579 550	DH	PANEL ASSEMBLY - Right center cockpit, tan/seal	1	
-62	68476-02	F	PANEL ASSEMBLY - Right rear cockpit, red	1	
	69419-02	AR	PANEL ASSEMBLY - Right rear cockpit, red	1	
	69561-02	Q	PANEL ASSEMBLY - Right rear cockpit, red	1	
	99237-02	AQ	PANEL ASSEMBLY - Right rear cockpit, red	1	
	99237-08	L	PANEL ASSEMBLY - Right rear cockpit, red	1	
	580 462	AS	PANEL ASSEMBLY - Right rear cockpit, red	1	
	579 759	AT	PANEL ASSEMBLY - Right rear cockpit, red	1	
	68476-03	F	PANEL ASSEMBLY - Right rear cockpit, brown	1	
	69419-03	AR	PANEL ASSEMBLY - Right rear cockpit, brown	1	
	68476-04	F	PANEL ASSEMBLY - Right rear cockpit, blue	1	
	69419-04	AR	PANEL ASSEMBLY - Right rear cockpit, blue	1	
	69561-03	Q	PANEL ASSEMBLY - Right rear cockpit, blue	1	
	99237-03	AQ	PANEL ASSEMBLY - Right rear cockpit, blue	1	
	99237-09	L	PANEL ASSEMBLY - Right rear cockpit, blue/green	1	
	580 463	AS	PANEL ASSEMBLY - Right rear cockpit, blue/green	1	
	579 758	AT	PANEL ASSEMBLY - Right rear cockpit, blue/green	1	
	68476-05	P	PANEL ASSEMBLY - Right rear cockpit, beige	1	
	69419-05	AR	PANEL ASSEMBLY - Right rear cockpit, beige	1	
	69561-04	Q	PANEL ASSEMBLY - Right rear cockpit, beige	1	
	99237-04	AQ	PANEL ASSEMBLY - Right rear cockpit, beige	1	
	99237-10	L	PANEL ASSEMBLY - Right rear cockpit, beige	1	
	580 464	AS	PANEL ASSEMBLY - Right rear cockpit, gold	1	
	579 757	AT	PANEL ASSEMBLY - Right rear cockpit, gold	1	
	69419-06	AR	PANEL ASSEMBLY - Right rear cockpit, black	1	
	69561-05	Q	PANEL ASSEMBLY - Right rear cockpit, black	1	
	99237-05	AQ	PANEL ASSEMBLY - Right rear cockpit, black	1	
	99237-11	L	PANEL ASSEMBLY - Right rear cockpit, black	1	
	580 465	AS	PANEL ASSEMBLY - Right rear cockpit, black	1	
	579 756	AT	PANEL ASSEMBLY - Right rear cockpit, black	1	

When ordering, always specify Part Number, Description and Serial Number of Aircraft

PIPER PARTS CATALOG

Figure and Index Number	Part Number	Code	NOMENCLATURE	No Req	SERIAL NUMBERS AFFECTED
24-62	69561-06	Q	PANEL ASSEMBLY - Right rear cockpit, green	1	
	99237-07	AQ	PANEL ASSEMBLY - Right rear cockpit, green	1	
	99237-13	L	PANEL ASSEMBLY - Right rear cockpit, green	1	
	580 467	AS	PANEL ASSEMBLY - Right rear cockpit, green	1	
	579 754	AT	PANEL ASSEMBLY - Right rear cockpit, green	1	
	69561 07	Q	PANEL ASSEMBLY - Right rear cockpit, white	1	
	99237 06	AQ	PANEL ASSEMBLY - Right rear cockpit, white	1	
	99237-12	L	PANEL ASSEMBLY - Right rear cockpit, white	1	
	580 466	AS	PANEL ASSEMBLY - Right rear cockpit, white	1	
	579 755	AW	PANEL ASSEMBLY - Right rear cockpit, white	1	
	579 408	DC	PANEL ASSEMBLY - Right rear cockpit, white/camel/black	1	
	579 551	DH	PANEL ASSEMBLY - Right rear cockpit, olivetone	1	
	579 552	DV	PANEL ASSEMBLY - Right rear cockpit, midnight blue	1	
	579 314	CU	PANEL ASSEMBLY - Right rear cockpit, dark blue	1	32-7940150 and up
	579 553	DH	PANEL ASSEMBLY - Right rear cockpit, raspberry/black	1	
	579 554	DH	PANEL ASSEMBLY - Right rear cockpit, tan/seal	1	
-63	66547-02	AY	RETAINER - Left rear	1	
	66547-03	AY	RETAINER - Right rear	1	
-64	66484-00	F	PAN - Armrest, left front	1	
	66484-02	F	PAN - Armrest, left rear	1	
	66484-01	F	PAN - Armrest, right	1	
	65768-00	F,AX	PAN - Armrest, left rear	1	
	65768-01	F,AX	PAN - Armrest, right rear	1	
-65	66492-02	F	PAD - Grip armrest, left, red	2	
	66492-06	F	PAD - Grip armrest, left, brown	2	
	66492-10	F	PAD - Grip armrest, left, blue	2	
	66492-14	P	PAD - Grip armrest, left, beige	2	
	66492 03	F	PAD - Grip armrest, right, red	2	
	66492-07	F	PAD - Grip armrest, right, brown	2	
	66492-11	F	PAD - Grip armrest, right, blue	2	
	66492-15	P	PAD - Grip armrest, right, beige	2	
-65a	66710-16	T,BX	HOUSING ASSEMBLY - Armrest, left	2	
	66710 17	T,BX	HOUSING ASSEMBLY - Armrest, right	2	
65b	763 003	T,BX	* ASH TRAY - (S-25-AR-C)	1	
-65c	66710-44	X,DB	PAD - Armrest	4	
	66710-21	AR	PAD - Armrest, brown	4	
	66710-26	CQ	PAD - Armrest, white	4	
	580 731	DC	PAD - Armrest, camel	4	
	579 507	DH	PAD - Armrest, olivetone	4	
	579 508	DV	PAD - Armrest, midnight blue	4	
	579 474	CU	PAD - Armrest, dark blue	4	32-7940150 and up
	579 509	DH	PAD - Armrest, black	4	
	579 510	DH	PAD - Armrest, tan	4	
65d	419 594	T	SCREW - (AN530-10R36)	8	
-66	453 141	F,W	BOX - Ash (947478)	4	
-67	65286-05	F	KNOB - Ash box, red	4	
	65286-07	F	KNOB - Ash box, brown	4	
	65286-06	F	KNOB - Ash box, blue	4	
	65286-08	P	KNOB - Ash box, tan	4	
-68	484 385	F	RETAINER - Ash box	4	
-69	65304-00	F	PANEL - Ash box	4	
-70	62353-04	F	LOOP ASSEMBLY - Assist	2	
	62353-05	BA	LOOP ASSEMBLY - Assist	2	
	79456-00	BB	LOOP ASSEMBLY - Assist	2	
-71	65869 00	H	ROD - Sun visor	2	
-72	65869-00	H	BEARING - Sun visor	2	
-73	65870-00	H	CLIP - Sun visor, upper left and lower right	2	
-74	65871-00	H	CLIP - Sun visor, lower left and upper right	2	

When ordering, always specify Part Number, Description and Serial Number of Aircraft

PIPER PARTS CATALOG

Figure and Index Number	Part Number	Code	NOMENCLATURE	No. Req.	SERIAL NUMBERS AFFECTED
24-75	65866-02	CX	BLADE - Sun visor	2	
	69958-02	CY	BLADE - Sun visor, pilot	1	
	69957-02	AJ	BLADE - Sun visor, pilot	1	32-7600022 and up
	65866-02	CZ	BLADE - Sun visor, co-pilot	1	
-76	99121-00		PLACARD ASSEMBLY - Alternate static correlation	1	
-77	99737-02	L	COVER ASSEMBLY - Inertia reel, forward, left	1	
	78054-02	AG	COVER ASSEMBLY - Inertia reel, forward, left	1	
	99801-00	L	COVER ASSEMBLY - Inertia reel, forward, right	1	
	99801-02	AG	COVER ASSEMBLY - Inertia reel, forward, right	1	
-78	99734-02	E	PANEL - Inertia reel cover, left rear	1	
	96921-03	AD	PANEL - Inertia reel cover, left rear	1	
	99733-02	AE	PANEL - Inertia reel cover, right rear	1	
	78587-00	AT	PANEL - Inertia reel cover, right rear	1	
-79	78117-00	AG	RETAINER - Glare shield, left	1	
-80	78118-00	AG	RETAINER - Glare shield, right	1	
-81	68708-00	BC	BLADE AND TUBE ASSEMBLY - Sun visor, left	1	
	68708-01	BC	BLADE AND TUBE ASSEMBLY - Sun visor, right	1	
-82	68017-00		COVER - Aft tunnel	1	
-83	76221-00	BD	CLIP - Shoulder harness retaining	1	
-84	69363-00	BG	PLACARD - Rudder trim	1	
-85	69192-00		PLACARD - Fuel, passenger operating limitations	1	
-86	67235-00	AU	GRIP - Handhold, black	2	
-87	68993-00	A,B	SILL - Lower cargo hatch	1	
	69189-00	A,AD	SILL - Lower cargo hatch	1	
-88	63142-34	A	TRIM STRIP - Cargo door windlacing, top	1	
-89	69097-00	F	PLACARD - Operating limitation	1	
-90	99991-00	BK	COVER - Transponder antenna cable	1	
-91	79125-00	AG	CAP - Trim, left	1	
	79125-01	AG	CAP - Trim, right	1	
-92	96866-00	BE,BF	PLATE - Strike	1	
-93	65410-02	AJ,BM	COVER ASSEMBLY - Fuel selector control, lower, brown	1	32-1 to 32-875 inclusive
	65410-03	AJ,BL	COVER ASSEMBLY - Fuel selector control, lower, blue	1	32-1 to 32-875 inclusive
	65410-06	AJ, BL	COVER ASSEMBLY - Fuel selector control, lower, red	1	32-1 to 32-875 inclusive
	69090-02	Y,BM	COVER ASSEMBLY - Fuel selector control, lower, brown	1	
	69090-03	Y,BL	COVER ASSEMBLY - Fuel selector control, lower, blue	1	
	69090-04	Y,BL	COVER ASSEMBLY - Fuel selector control, lower, red	1	
	69090-05	P,BM	COVER ASSEMBLY - Fuel selector control, lower, black	1	
	69442-02	BL,BN	COVER ASSEMBLY - Fuel selector control, lower, red	1	
	69442-03	Q,BM	COVER ASSEMBLY - Fuel selector control, lower, blue	1	
	69442-04	BL,BN	COVER ASSEMBLY - Fuel selector control, lower, tan	1	
	69442-05	BM,BN	COVER ASSEMBLY - Fuel selector control, lower, black	1	
	69442-06	BL,BN	COVER ASSEMBLY - Fuel selector control, lower, green	1	
	69442-07	BL,BN	COVER ASSEMBLY - Fuel selector control, lower, white	1	
	69442-09	BL,BN	COVER ASSEMBLY - Fuel selector control, lower, blue/green	1	
	69652-04	DL	COVER ASSEMBLY - Fuel selector control, lower, white	1	
	69652-10	BN	COVER ASSEMBLY - Fuel selector control, lower, blue	1	
	69652-11	BT	COVER ASSEMBLY - Fuel selector control, lower, brown	1	
	69652-12	X,BG	COVER ASSEMBLY - Fuel selector control, lower	1	

PIPER PARTS CATALOG

Figure and Index Number	Part Number	Code	NOMENCLATURE	No. Req.	SERIAL NUMBERS AFFECTED
24-94	65406-10	AJ,BU	COVER ASSEMBLY - Console, brown (less lower fuel selector control)	1	32-1 to 32-875 inclusive
	69091-04	Y,BU	COVER ASSEMBLY - Console, brown (less lower fuel selector control)	1	
	65406-11	AJ,BU	COVER ASSEMBLY - Console, blue (less lower fuel selector control)	1	32-1 to 32-875 inclusive
	69091-03	Y,BU	COVER ASSEMBLY - Console, blue (less lower fuel selector control)	1	
	65406-12	AJ,BU	COVER ASSEMBLY - Console, red (less lower fuel selector control)	1	32-1 to 32-875 inclusive
	69091-02	Y,BU	COVER ASSEMBLY - Console, red (less lower fuel selector control)	1	
	69091-09	BR,BU	COVER ASSEMBLY - Console, black (less lower fuel selector control)	1	
	69673-02	BQ	COVER ASSEMBLY - Console, red (less lower fuel selector control)	1	
	69673-03	BQ	COVER ASSEMBLY - Console, blue (less lower fuel selector control)	1	
	69673-04	BQ	COVER ASSEMBLY - Console, black (less lower fuel selector control)	1	
	69673-05	BQ	COVER ASSEMBLY - Console, brown (less lower fuel selector control)	1	
	69441-16	AR,BL	COVER ASSEMBLY - Console, red (with lower fuel selector control)	1	
	69441-17	AR,BV	COVER ASSEMBLY - Console, blue (with lower fuel selector control)	1	
	69441-20	AR,BV	COVER ASSEMBLY - Console, brown (with lower fuel selector control)	1	
	69441-18	AR,BL	COVER ASSEMBLY - Console, tan (with lower fuel selector control)	1	
	69441-19	AR,BL	COVER ASSEMBLY - Console, black (with lower fuel selector control)	1	
	69441-02	BL,BN	COVER ASSEMBLY - Console, red (less lower fuel selector control)	1	
	69441-03	Q,BV	COVER ASSEMBLY - Console, blue (less lower fuel selector control)	1	
	69441-04	BL,BN	COVER ASSEMBLY - Console, tan (less lower fuel selector control)	1	
	69441-05	BL,BN	COVER ASSEMBLY - Console, black (less lower fuel selector control)	1	
	69441-06	BL,BN	COVER ASSEMBLY - Console, green (less lower fuel selector control)	1	
	69441-07	BL,BN	COVER ASSEMBLY - Console, white (less lower fuel selector control)	1	
	69441-22	BL,BN	COVER ASSEMBLY - Console, blue/green (less lower fuel selector control)	1	
	69654-02	DK	COVER ASSEMBLY - Console, green (less lower fuel selector control)	1	
	69654-03	DL	COVER ASSEMBLY - Console, white (less lower fuel selector control)	1	
	69654-04	DK	COVER ASSEMBLY - Console, tan (less lower fuel selector control)	1	
	69654-05	DK	COVER ASSEMBLY - Console, red (less Lower fuel selector control)	1	
	69654-07	DK	COVER ASSEMBLY - Console, black (less lower fuel selector control)	1	
	69654-09	DK	COVER ASSEMBLY - Console, blue/green (less lower fuel selector control)	1	

Figure and Index Number	Part Number	Code	NOMENCLATURE	No Req.	SERIAL NUMBERS AFFECTED
24-94	69654-06	BY	COVER ASSEMBLY - Console, blue (less lower fuel selector control)	1	
	69654 08	BY	COVER ASSEMBLY - Console, brown (less lower fuel selector control)	1	
	69654-19	DC,DT	COVER ASSEMBLY Console (less lower fuel selector control)	1	
-95	65397-00	AJ,BL	* PLACARD - Fuel selector	1	32-1 to 32 875 inclusive
	69086-00	B:,CA	* PLACARD Fuel selector	1	
-96	66219-00	F	* PLACARD - Rudder trim	1	
	69363-00	BZ	* PLACARD - Rudder trim	1	
-97	69344-24	AJ	COVER ASSEMBLY - Engine control, black	1	32-1111 to 32 7200055 incl
	69344-24	AJ	COVER ASSEMBLY - Engine control, red	1	32-1111 to 32-7200055 incl
	69344-04	AJ	COVER ASSEMBLY Engine control, blue	1	32-1111 to 32-1320 inclusive
	69344 05	AJ	COVER ASSEMBLY - Engine control brown	1	32-1111 to 32 1250 inclusive
	69344-24	AJ	COVER ASSEMBLY - Engine control, tan	1	32-1111 to 32-7200055 incl
	69344-24	AJ	COVER ASSEMBLY - Engine control, green	1	32-1251 to 32-7200055 incl
	69344-13	AJ	COVER ASSEMBLY - Engine control, white	1	32 1251 to 32-7200055 incl
	69344 24	AJ	COVER ASSEMBLY - Engine control, blue/green	1	32-7100001 to 32 7200055 incl
	69344-07	CC,CD	COVER ASSEMBLY - Engine control, black	1	
	69344-08	CC,CD	COVER ASSEMBLY - Engine control, red	1	
	69344-09	CK,CL	COVER ASSEMBLY - Engine control, blue	1	
	69344-10	CF,CG	COVER ASSEMBLY - Engine control, brown	1	
	69344-11	CC,CD	COVER ASSEMBLY - Engine control, tan	1	
	69344-14	CH,CJ	COVER ASSEMBLY - Engine control, green	1	
	69344-15	CH,CJ	COVER ASSEMBLY - Engine control, white	1	
	69344-17	CB,CE	COVER ASSEMBLY - Engine control, blue/green	1	
	69344-28	X,BB	COVER ASSEMBLY - Engine control	1	
	69344-22	K	COVER ASSEMBLY - Engine control, white	1	
-97a	79472-00	BB	* STOP ASSEMBLY - Mixture control	1	
-97b	69345-00	AJ	* PLACARD - Engine controls	1	32-1111 to 32-7200055 incl
	69341-00	CC,CD	* PLACARD - Engine controls	1	
-97c	69669 44	BB	PLACARD - Engine controls	1	
-98	68736-02	AJ	CUP - Air vent, red	4	32-48 to 32-460 inclusive
	68736-03	AJ	CUP - Air vent, brown	4	32 48 to 32-460 inclusive
	68736-04	AJ	CUP - Air vent, blue	4	32-48 to 32-460 inclusive
	65735-03	AM	CUP - Air vent, brown	4	
	65735-04	AN	CUP - Air vent, blue	4	
	65735-18	X,AL	CUP - Air vent	4	
	65735-12	CQ	CUP Air vent, white	4	
-99	69359-07	AU	COVER - Switch plate, black	1	
	69359-08	AU	COVER - Switch plate, red	1	
	69359-09	AC	COVER - Switch plate, blue	1	
	69359-10	CF,CM	COVER - Switch plate, brown	1	
	69359-11	AU	COVER - Switch plate, tan	1	
	69359-14	CN	COVER - Switch plate, green	1	
	69359-15	CN	COVER - Switch plate, white	1	
	69359-16	CO	COVER - Switch plate, blue/green	1	
	69359-17	X,AS	COVER ASSEMBLY - Switch plate	1	
	79182-02	X,DF	COVER - Switch plate	1	
	69976 03	X,DH	COVER - Switch plate, lighted	1	
-100	69568-00	CW	PLACARD Flight operation limitations	1	
	69669-146	AJ	PLACARD - Flight operation limitations	1	32-7700001 and up
	69669-88	AF	PLACARD - Flight operation limitations	1	
	69669-146	DN	PLACARD - Flight operation limitations	1	
-101	65865-00	H	RETAINER - Sun visor	2	
-102	79404-00	BB	COVER - Trim, radio cooling	1	
-103	79440-00	CP	RETAINER ASSEMBLY - Rear seat leg	4	
-104	79466-00	BB	CAP - Assist strap	2	
-105	87786-00		PLACARD - Stabilator trim	1	

PIPER PARTS CATALOG

Figure and Index Number	Part Number	Code	NOMENCLATURE	No. Req.	SERIAL NUMBERS AFFECTED
24 106	38193 00	DU	COVER ASSEMBLY - Baggage compartment	1	32R-7680001 to 32R-7780002 incl
	38193-04	DU	COVER ASSEMBLY - Baggage compartment	1	32R-7780003 and up
-107	69669-87	Z	PLACARD - Fuel selector	1	
	89853-00	BQ	PLACARD Fuel selector	1	
-108	69669-84	N	PLACARD - Gear override latch	1	
109	87702 00	N	PLACARD - Emergency gear lever	1	
-110	69669-85	N	PLACARD - Override instructions	1	
-111	66787-00		PLACARD - Cabin bu kheed	1	
-112	415 376		SCREW - (MS51957-27)	4	
	477 696		DOME NUT (8061-NPI	4	
113	99790 00		PAD - Shoulder strap attachment	1	
-114	515 710	WAG	SCREW - (P510084-44-2)	2	
	407 662	WAG	WASHER - (AN960-6)	2	
	404 909	WAG	NUT (MS20365 632C)	2	
115	69669-184	DH	PLACARD - Dimmer	1	
-116	36538-04		SCREW AND POST ASSEMBLY - Retainer	1	
-117	484 691		RIVET - Plastic (201-120751-00-0103)	2	

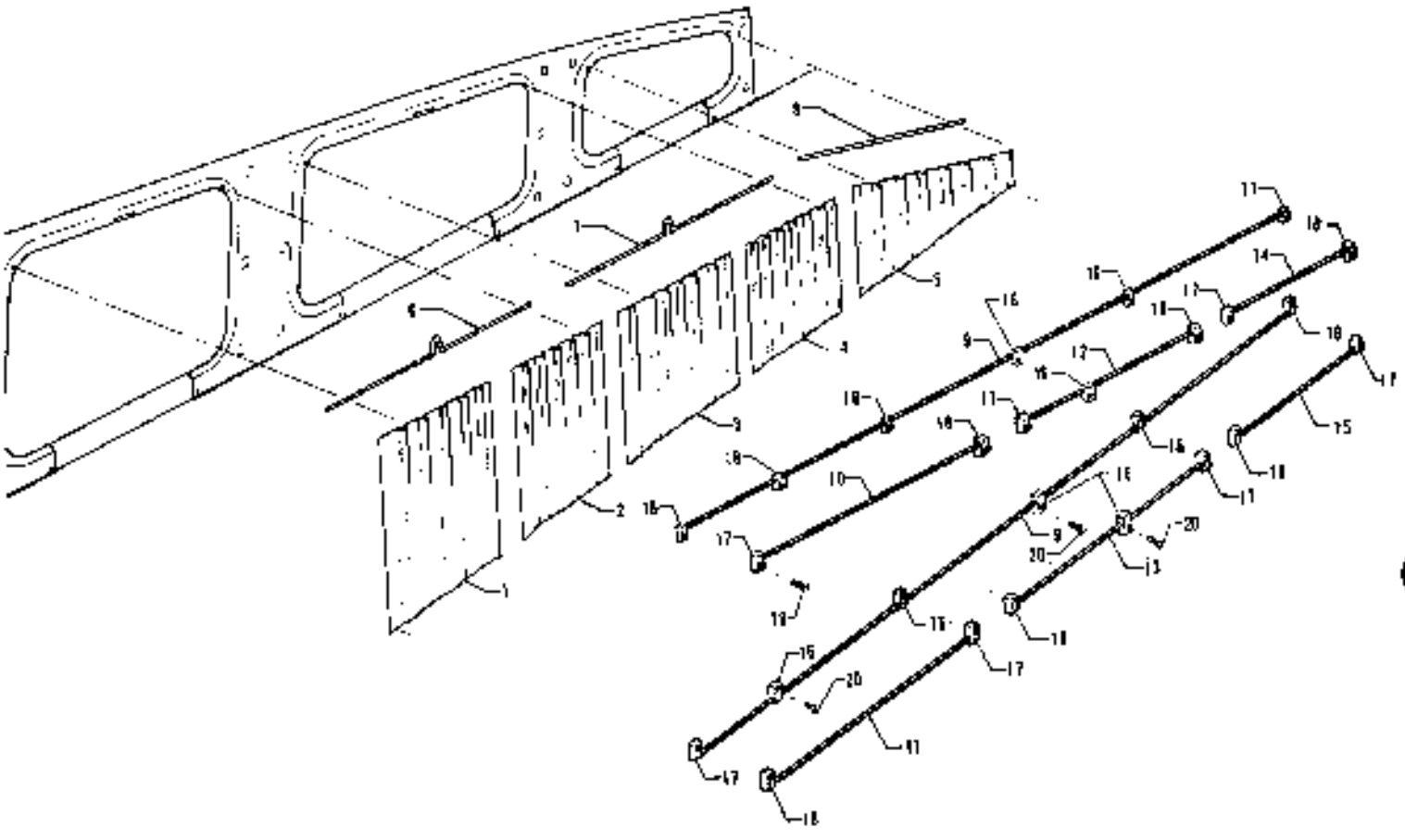

Figure 24A Window Curtains Installation
(PA-32-260 - Serial Nos 32-7700001 and up)
(PA-32-300 - Serial Nos 32-7740001 and up)
(PA-32R-300 - Serial Nos 32R 7780001 and up)

CODE EXPLANATIONS FOR FIGURE 24A

A - Used on PA-32-260 with serial numbers 32-7700001 and up, PA-32-300 with serial numbers 32-7740001 and up, and PA-32R-300 with serial numbers 32R-7780001 and up.
B - Used on PA-32-260 with serial numbers 32-7700001 to 32-7700023 inclusive, PA-32-300 with serial numbers 32-7740001 to 32-7740113 inclusive, and PA-32R-300 with serial numbers 32R-7780001 to 32R-7780549 inclusive.
C - Used on PA-32-260 with serial numbers 32-7800001 and up, PA-32-300 with serial numbers 32-7840001 and up, and PA-32R-300 with serial numbers 32R-7880001 and up.
D - Reference latest revision to Piper Service Bulletin 656. Inspect area for possible drill damage to fuselage longerons at lower window line, which could have occurred during window curtain installation. Cracking of the longeron could cause a reduction in the structural integrity of the airframe.

PIPER PARTS CATALOG

Figure and Index Number	Part Number	Code	NOMENCLATURE	No. Req.	SERIAL NUMBERS AFFECTED
24A-	79721	B	DRAWING - Curtain and Rod Installation		
	67955	C	DRAWING - Curtain and Rod Installation		
-1	79721-11	B	CURTAIN ASSEMBLY - Window, center front, left	1	
	67968-02	C	CURTAIN ASSEMBLY - Window, center front, left	1	
	79721-10	B	CURTAIN ASSEMBLY - Window, center front, right	1	
	67968-03	C	CURTAIN ASSEMBLY - Window, center front, right	1	
-2	79721-13	B	CURTAIN ASSEMBLY - Window, center rear, left	1	
	67968-04	C	CURTAIN ASSEMBLY - Window, center rear, left	1	
	79721-12	B	CURTAIN ASSEMBLY - Window, center rear, right	1	
	67968-05	C	CURTAIN ASSEMBLY - Window, center rear, right	1	
-3	79721-15	B	CURTAIN ASSEMBLY - Window, center front, left	1	
	67968-06	C	CURTAIN ASSEMBLY - Window, center front, left	1	
	79721-14	B	CURTAIN ASSEMBLY - Window, center front, right	1	
	67968-07	C	CURTAIN ASSEMBLY - Window, center front, right	1	
-4	79721-17	B	CURTAIN ASSEMBLY - Window, center rear, left	1	
	67968-08	C	CURTAIN ASSEMBLY - Window, center rear, left	1	
	79721-16	B	CURTAIN ASSEMBLY - Window, center rear, right	1	
	67968-09	C	CURTAIN ASSEMBLY - Window, center rear, right	1	
-5	79721-19	B	CURTAIN ASSEMBLY - Window, rear, left	1	
	67968-10	C	CURTAIN ASSEMBLY - Window, rear, left	1	
	79721-18	B	CURTAIN ASSEMBLY - Window, rear, right	1	
	67968-11	C	CURTAIN ASSEMBLY - Window, rear, right	1	
-6	79702-02	B	ROD - Window curtain, center, right	1	
-7	79702-08	B	ROD - Window curtain, center, right	1	
-8	79702-06	B	ROD - Window curtain, rear, right	1	
-9	67969-05		ROD - Window curtain, top and bottom, right	2	
-10	79702-02	B,D	ROD - Window curtain, center, left	1	
	67969-08	C,D	ROD - Window curtain, center, top, left	1	
-11	67969-07	C,D	ROD - Window curtain, center, bottom, left	1	
-12	79702-03	B,D	ROD - Window curtain, center, left	1	
	67969-10	C,D	ROD - Window curtain, center, top, left	1	
-13	67969-09	C,D	ROD - Window curtain, center, bottom, left	1	
-14	79702-06	B	ROD - Window curtain, rear, top, left	1	
	67969-12	C	ROD - Window curtain, rear, top, left	1	
-15	67969-11	C	ROD - Window curtain, rear, bottom, left	1	
-16	67969-04	C	BRACKET - Window rod attachment, right, top and bottom	10	
-17	67969-03	C	BRACKET - Window rod attachment	8	
-18	67969-02	C	BRACKET - Window rod attachment	8	
-19	415 539	C	SCREW - (MS35206-249)	23	
	477 778	C	NUT - (PS10062-6-2)	23	
-20	419 596	C	SCREW - (AN530-10R12)	3	
	407 564	C	WASHER - (AN960-10)	3	

1G22 THRU 1G24

INTENTIONALLY LEFT BLANK

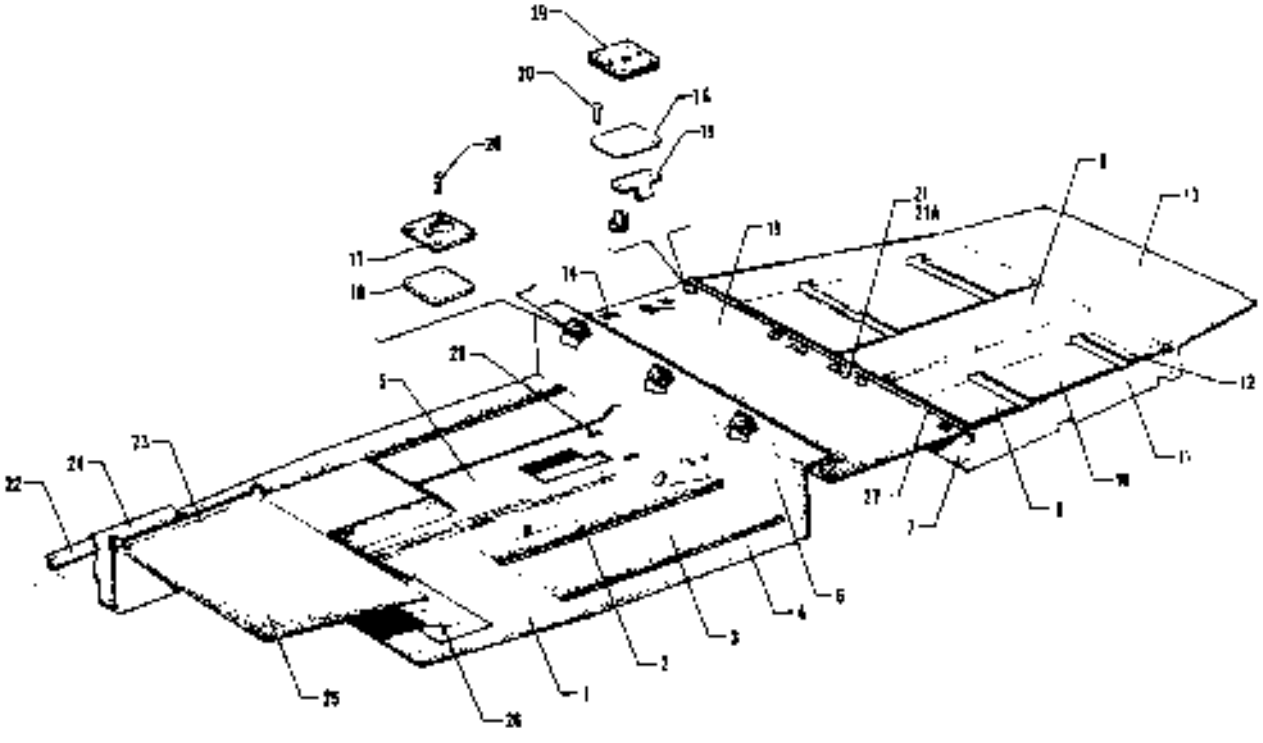

Figure 25 Carpet Installation

CODE EXPLANATIONS FOR FIGURE 25

A - Used on PA-32-260 with serial numbers 32-1 to 32-1110 incl., and PA-32-300 with serial numbers 32-40000 to 32-40565 incl
B - Used on PA-32-260 with serial numbers 32-1111 to 32-7400061 incl., and PA-32-300 with serial numbers 32-40566 to 32-7440182 incl
C - Used on PA-32-260 with serial numbers 32-1031 to 32-1110 incl., and PA-32-300 with serial numbers 32-40456 to 32-40565 incl
D - Used on PA-32-260 with serial numbers 32-1111 to 32-1250 incl., and PA-32-300 with serial numbers 32-40566 to 32-40850 incl
E - Used on PA-32-260 with serial numbers 32-1251 to 32-7400061 incl., and PA-32-300 with serial numbers 32-40851 to 32-7440182 incl
F - Used on PA-32-260 with serial numbers 32-7400001 and up, PA-32-300 with serial numbers 32-7440001 and up, and PA-32R-300
G - Used if sound reduction carpeting is installed
H - When ordering, specify color. For 1974, 1975 and 1976 Models specify color red, blue, black, fawn or green. For 1977 Models specify color heather or monaco. For 1978 Models and up specify color heather, palm, royal blue, raspberry or brown
J - Used on PA-32-260 with serial numbers 32-7500001 to 32-7500033 incl., PA-32-300 with serial numbers 32-7640001 to 32-7640142 incl., and PA-32R-300 with serial numbers 32R-7680001 to 32R-7680538 incl
K - Used on PA-32-260 with serial numbers 32-1 to 32-1320 incl., and PA-32-300 with serial numbers 32-40000 to 32-41018 incl
L - Used on PA-32-260 with serial numbers 32-7100001 and up. PA-32-300 with serial numbers 32-7140001 and up, and PA-32R-300
M - Used if optional 7th seat is installed
N - Used on PA-32-260 with serial numbers 32-1 to 32-7500002 incl., and PA-32-300 with serial numbers 32-40000 to 32-7540028 incl
O - Used on PA-32-260 with serial numbers 32-1 to 32-1320 incl., 32-7500003 to 32-7700011 incl., and PA-32-300 with serial numbers 32-40000 to 32-41018 incl., 32-7540029 to 32-7740042 incl
P - Used on PA-32-260 with serial numbers 32-7100001 to 32-7500002 incl., and PA-32-300 with serial numbers 32-7140001 to 32-7540028 incl
Q - Used on PA-32R-300 only
R - Used on PA-32-260 and PA-32-300 only
S - Used on PA-32-260 with serial numbers 32-1 to 32-7100038 incl., and PA-32-300 with serial numbers 32-40000 to 32-7140086 incl
T - Used on PA-32-260 with serial numbers 32-7900001 and up, PA-32-300 with serial numbers 32-7240001 and up, and PA-32R-300
U - Used on PA-32-260 with serial numbers 32-7500001 to 32-7600032 incl., and PA-32-300 with serial numbers 32-7540001 to 32-7640142 incl
V - Used on PA-32-260 with serial numbers 32-1031 to 32-7100038 incl., and PA-32-300 with serial numbers 32-40456 to 32-7140086 incl
W - These parts must be ordered from Service Spares Department, Piper Aircraft, Lock Haven, Penna
X - Used on PA-32-260 with serial numbers 32-1111 to 32-1320 incl., and PA-32-300 with serial numbers 32-40566 to 32-41018 incl
Y - Used on PA-32-260 with serial numbers 32-1251 to 32-7100038 incl., and PA-32-300 with serial numbers 32-40851 to 32-7140086 incl
Z - Used on PA-32-260 with serial numbers 32-7100001 to 32-7100038 incl., and PA-32-300 with serial numbers 32-7140001 to 32-7140086 incl
AA - Used on PA-32-260 with serial numbers 32-7500003 to 32-7700011 incl., PA-32-300 with serial numbers 32-7540029 to 32-7740042 incl., and PA-32R-300 with serial numbers 32R-7680001 to 32R-7780188 incl
AB - Used on PA-32-260 with serial numbers 32-1111 to 32-7100038 incl., and PA-32-300 with serial numbers 32-40566 to 32-7140086 incl
AC - Used on PA-32-260 with serial numbers 32-7700001 and up, PA-32-300 with serial numbers 32-7740001 and up, and PA-32R-300 with serial numbers 32R-7780001 and up
AD - See Figure 32B if aft facing center seats are installed
AE - Used on PA-32-260 with serial numbers 32-7700001 and up, and PA-32-300 with serial numbers 32-7740001 and up
AF - Used on PA-32-260 with serial numbers 32-7400001 to 32-7600033 incl., PA-32-300 with serial numbers 32-7440001 to 32-7640142 incl., and PA-32R-300 with serial numbers 32R-7680001 to 32R-7680538 incl if sound reduction carpeting is installed
AG - Used on PA-32-260 with serial numbers 32-7700001 and up, PA-32-300 with serial numbers 32-7740001 and up, and PA-32R-300 with serial numbers 32R-7780001 and up if sound reduction carpeting is installed
AH - Used on PA-32-260 with serial numbers 32-7200001 to 32-7600033 incl., PA-32-300 with serial numbers 32-7240001 to 32-7640142 incl., and PA-32R-300 with serial numbers 32R-7680001 to 32R-7680538 incl
AJ - Used on PA-32-260 with serial numbers 32-7500001 and up, PA-32-300 with serial numbers 32-7540001 and up, and PA-32R-300
AK - Used on PA-32-260 with serial numbers 32-1 to 32-1320 incl., 32-7500003 to 32-7700011 incl., and PA-32-300 with serial numbers 32-40000 to 32-41018 incl., 32-7540029 to 32-7740042 incl
AL - Used on PA-32-260 with serial numbers 32-7700012 and up, PA-32-300 with serial numbers 32-7740043 and up, and PA-32R-300 with serial numbers 32R-7780189 and up
AM - Used on PA-32-260 with serial numbers 32-1 to 32-7700011 incl., PA-32-300 with serial numbers 32-40000 to 32-7740042 incl., and PA-32R-300 with serial numbers 32R-7680001 to 32-7780188 incl
AN - Used on PA-32-260 with serial numbers 32-1 to 32-1320 incl., 32-7500003 to 32-7700011 incl., PA-32-300 with serial numbers 32-40000 to 32-41018 incl., 32-7540029 to 32-7740042 incl., and PA-32R-300 with serial numbers 32R-7680001 to 32R-7780188 incl
AO - Used on PA-32-260 with serial numbers 32-7700012 and up, and PA-32-300 with serial numbers 32-7740043 and up
AP - Used on PA-32-260 with serial numbers 32-7700001 to 32-7700023 incl., PA-32-300 with serial numbers 32-7740001 to 32-7740113 incl., and PA-32R-300 with serial numbers 32R-7780001 to 32R-7780549 incl
AQ - Used on PA-32-260 with serial numbers 32-7800001 and up, PA-32-300 with serial numbers 32-7840001 and up, and PA-32R-300 with serial numbers 32R-7880001 and up

CODE EXPLANATIONS FOR FIGURE 25 (cont.)

AR - Used on PA-32-260 with serial numbers 32-7700001 to 32-7700023 incl., and PA-32-300 with serial numbers 32-7740001 to 32-7740113 incl.
AS - Used on PA-32-260 with serial numbers 32-7800001 and up, and PA-32-300 with serial numbers 32-7840001 and up.
AT When ordering, specify color black or "bark II"

PIPER PARTS CATALOG

Figure and Index Number	Part Number	Code	NOMENCLATURE	No. Req.	SERIAL NUMBERS AFFECTED
25-	68585	A	DRAWING - Carpet Installation		
	69402	B	DRAWING - Carpet Installation		
	89845	AJ	DRAWING - Carpet Installation		
	69579	R	DRAWING - Forward Baggage Compartment Finishing		
	98165	Q	DRAWING - Forward Baggage Compartment Finishing		
-1	68586-02	A	CARPET - Front, left, red	1	
	68586-10	B	CARPET - Front, left, red	1	
	591 042	J	CARPET - Front, left, red	1	
	68586-04	A	CARPET - Front, left, brown	1	
	68586-12	D	CARPET - Front, left, brown	1	
	68586-06	A	CARPET - Front, left, blue	1	
	68586-16	B	CARPET - Front, left, blue	1	
	591 044	J	CARPET - Front, left, blue	1	
	68586-08	C	CARPET - Front, left, black	1	
	68586-14	B	CARPET - Front, left, black	1	
	591 043	J	CARPET - Front, left, black	1	
	68586-18	E	CARPET - Front, left, fawn	1	
	68586-20	E	CARPET - Front, left, green	1	
	591 046	J	CARPET - Front, left, green	1	
	79236-14	F,G,H	CARPET - Front, left	1	
	591 509	AC	CARPET - Front, left, heather	1	
	591 510	AP	CARPET - Front, left, monaco	1	
	591 628	AQ	CARPET - Front, left, palm	1	
	591 629	AQ	CARPET - Front, left, royal blue	1	
	591 630	AQ	CARPET - Front, left, raspberry	1	
	591 631	AQ	CARPET - Front, left, brown	1	
	68586-03	A	CARPET - Front, right, red	1	
	68586-11	B	CARPET - Front, right, red	1	
	591 047	J	CARPET - Front, right, red	1	
	68586-05	A	CARPET - Front, right, brown	1	
	68586-13	D	CARPET - Front, right, brown	1	
	68586-07	A	CARPET - Front, right, blue	1	
	68586-17	B	CARPET - Front, right, blue	1	
	591 049	J	CARPET - Front, right, blue	1	
	68586-09	C	CARPET - Front, right, black	1	
	68586-15	B	CARPET - Front, right, black	1	
	591 048	J	CARPET - Front, right, black	1	
	68586-19	E	CARPET - Front, right, fawn	1	
	68586-21	E	CARPET - Front, right, green	1	
	591 051	J	CARPET - Front, right, green	1	
	79236-15	F,G,H	CARPET - Front, right	1	
	591 511	AC	CARPET - Front, right, heather	1	
	591 512	AP	CARPET - Front, right, monaco	1	
	591 632	AQ	CARPET - Front, right, palm	1	
	591 633	AQ	CARPET - Front, right, royal blue	1	
	591 634	AQ	CARPET - Front, right, raspberry	1	
	591 635	AQ	CARPET - Front, right, brown	1	
-2	68587-02	A	CARPET - Front, left inboard, red	1	
	68587-10	B	CARPET - Front, left inboard, red	1	
	591 052	J	CARPET - Front, left inboard, red	1	
	68587-04	A	CARPET - Front, left inboard, brown	1	
	68587-12	D	CARPET - Front, left inboard, brown	1	
	68587-06	A	CARPET - Front, left inboard, blue	1	
	68587-16	B	CARPET - Front, left inboard, blue	1	
	591 054	J	CARPET - Front, left inboard, blue	1	

PIPER PARTS CATALOG

Figure and Index Number	Part Number	Code	NOMENCLATURE	No. Req.	SERIAL NUMBERS AFFECTED
25-2	68587-08	C	CARPET - Front, left inboard, black	1	
	68587-14	B	CARPET - Front, left inboard, black	1	
	591 053	J	CARPET - Front, left inboard, black	1	
	68587-18	E	CARPET - Front, left inboard, fawn	1	
	68587-20	E	CARPET - Front, left inboard, green	1	
	591 056	J	CARPET - Front, left inboard, green	1	
	79238-17	F,G,H	CARPET - Front, left inboard	1	
	591 613	AC	CARPET - Front, left inboard, heather	1	
	591 614	AP	CARPET - Front, left inboard, monaco	1	
	591 636	AQ	CARPET - Front, left inboard, palm	1	
	591 637	AQ	CARPET - Front, left inboard, royal blue	1	
	591 638	AQ	CARPET - Front, left inboard, raspberry	1	
	591 639	AQ	CARPET - Front, left inboard, brown	1	
	68587-03	A	CARPET - Front, right inboard, red	1	
	68587-11	B	CARPET - Front, right inboard, red	1	
	591 057	J	CARPET - Front, right inboard, red	1	
	68587-05	A	CARPET - Front, right inboard, brown	1	
	68587-13	D	CARPET - Front, right inboard, brown	1	
	68587-07	A	CARPET - Front, right inboard, blue	1	
	68587-17	B	CARPET - Front, right inboard, blue	1	
	591 059	J	CARPET - Front, right inboard, blue	1	
	68587-09	C	CARPET - Front, right inboard, black	1	
	68587-15	B	CARPET - Front, right inboard, black	1	
	591 058	J	CARPET - Front, right inboard, black	1	
	68587-19	E	CARPET - Front, right inboard, fawn	1	
	68587-21	E	CARPET - Front, right inboard, green	1	
	591 061	J	CARPET - Front, right inboard, green	1	
	79238-18	F,G,H	CARPET - Front, right inboard	1	
	591 515	AC	CARPET - Front, right inboard, heather	1	
	591 516	AP	CARPET - Front, right inboard, monaco	1	
	591 640	AQ	CARPET - Front, right inboard, palm	1	
	591 641	AQ	CARPET - Front, right inboard, royal blue	1	
	591 642	AQ	CARPET - Front, right inboard, raspberry	1	
	591 643	AQ	CARPET - Front, right inboard, brown	1	
-3	63116-84	A	CARPET - Front, center, red	2	
	67906-02	B	CARPET - Front, center, red	2	
	591 031	J	CARPET - Front, center, red	2	
	63116-04	A	CARPET - Front, center, brown	2	
	69421-06	D	CARPET - Front, center, brown	2	
	63116-49	A	CARPET - Front, center, blue	2	
	67906-04	B	CARPET - Front, center, blue	2	
	591 033	J	CARPET - Front, center, blue	2	
	63116-133	C	CARPET - Front, center, black	2	
	67906-03	B	CARPET - Front, center, black	2	
	591 032	J	CARPET - Front, center, black	2	
	67906-05	E	CARPET - Front, center, fawn	2	
	67906-06	E	CARPET - Front, center, green	2	
	591 035	J	CARPET - Front, center, green	2	
	79238-05	F,G,H	CARPET - Front, center	2	
	591 503	AC	CARPET - Front, center, heather	2	
	591 504	AP	CARPET - Front, center, monaco	2	
	591 624	AQ	CARPET - Front, center, palm	2	
	591 625	AQ	CARPET - Front, center, royal blue	2	
	591 626	AQ	CARPET - Front, center, raspberry	2	
	591 627	AQ	CARPET - Front, center, brown	2	

PIPER PARTS CATALOG

Figure and Index Number	Part Number	Code	NOMENCLATURE	No. Req.	SERIAL NUMBERS AFFECTED
26-4	63116-83	A	CARPET - Front, outboard, red	2	
	67905-02	B	CARPET - Front, outboard, red	2	
	591 026	J	CARPET - Front, outboard, red	2	
	63116-05	A	CARPET - Front, outboard, brown	2	
	69421-07	D	CARPET - Front, outboard, brown	2	
	63116-48	A	CARPET - Front, outboard, blue	2	
	67905-04	B	CARPET - Front, outboard, blue	2	
	591 028	J	CARPET - Front, outboard, blue	2	
	63116-132	C	CARPET - Front, outboard, black	2	
	67905-03	B	CARPET - Front, outboard, black	2	
	591 027	J	CARPET - Front, outboard, black	2	
	67905-05	E	CARPET - Front, outboard, fawn	2	
	67905-06	E	CARPET - Front, outboard, green	2	
	591 030	J	CARPET - Front, outboard, green	2	
	79236-16	F,G,H	CARPET - Front, outboard	2	
	591 501	AC	CARPET - Front, outboard, heather	2	
	591 502	AP	CARPET - Front, outboard, monaco	2	
	591 620	AQ	CARPET - Front, outboard, palm	2	
	591 621	AQ	CARPET - Front, outboard, royal blue	2	
	591 622	AQ	CARPET - Front, outboard, raspberry	2	
	591 623	AQ	CARPET - Front, outboard, brown	2	
-5	68588-02	A	CARPET - Forward tunnel, red	1	
	68588-06	B	CARPET - Forward tunnel, red	1	
	591 062	J	CARPET - Forward tunnel, red	1	
	68588-03	A	CARPET - Forward tunnel, brown	1	
	68588-07	D	CARPET - Forward tunnel, brown	1	
	68588-04	A	CARPET - Forward tunnel, blue	1	
	68588-09	B	CARPET - Forward tunnel, blue	1	
	591 064	J	CARPET - Forward tunnel, blue	1	
	68588-05	C	CARPET - Forward tunnel, black	1	
	68588-08	B	CARPET - Forward tunnel, black	1	
	591 063	J	CARPET - Forward tunnel, black	1	
	69562-02	E	CARPET - Forward tunnel, fawn	1	
	69562-03	E	CARPET - Forward tunnel, green	1	
	591 065	J	CARPET - Forward tunnel, green	1	
	591 517	AC	CARPET - Forward tunnel, heather	1	
	591 518	AP	CARPET - Forward tunnel, monaco	1	
	591 644	AQ	CARPET - Forward tunnel, palm	1	
	591 645	AQ	CARPET - Forward tunnel, royal blue	1	
	591 646	AQ	CARPET - Forward tunnel, raspberry	1	
	591 647	AQ	CARPET - Forward tunnel, brown	1	
-6	68592-02	A	CARPET ASSEMBLY - Spar box, red	1	
	68592-06	B	CARPET ASSEMBLY - Spar box, red	1	
	591 072	J	CARPET ASSEMBLY - Spar box, red	1	
	68592-03	A	CARPET ASSEMBLY - Spar box, brown	1	
	68592-07	D	CARPET ASSEMBLY - Spar box, brown	1	
	68592-04	A	CARPET ASSEMBLY - Spar box, blue	1	
	68592-08	B	CARPET ASSEMBLY - Spar box, blue	1	
	591 074	J	CARPET ASSEMBLY - Spar box, blue	1	
	68592-05	C	CARPET ASSEMBLY - Spar box, black	1	
	68592-08	B	CARPET ASSEMBLY - Spar box, black	1	
	591 073	J	CARPET ASSEMBLY - Spar box, black	1	
	68592-10	E	CARPET ASSEMBLY - Spar box, fawn	1	
	68592-11	E	CARPET ASSEMBLY - Spar box, green	1	
	591 076	J	CARPET ASSEMBLY - Spar box, green	1	

PIPER PARTS CATALOG

Figure and Index Number	Part Number	Code	NOMENCLATURE	No Req	SERIAL NUMBERS AFFECTED
25-6	591 521	AE	CARPET ASSEMBLY - Spar box, heather	1	
	591 569	Q	CARPET ASSEMBLY - Spar box, heather	1	32R-7680001 and up
	591 522	AP	CARPET ASSEMBLY - Spar box, monaco	1	
	591 662	AS	CARPET ASSEMBLY - Spar box, palm	1	
	591 748	Q	CARPET ASSEMBLY - Spar box, palm	1	32R-7680001 and up
	591 653	AS	CARPET ASSEMBLY - Spar box, royal blue	1	
	591 749	Q	CARPET ASSEMBLY - Spar box, royal blue	1	32R-7680001 and up
	591 654	AS	CARPET ASSEMBLY - Spar box, raspberry	1	
	591 750	Q	CARPET ASSEMBLY - Spar box, raspberry	1	32R-7680001 and up
	591 655	AS	CARPET ASSEMBLY - Spar box, brown	1	
	591 751	Q	CARPET ASSEMBLY - Spar box, brown	1	32R-7680001 and up
7	68600-02	A	CARPET - Aft, left, red	1	
	68600-10	B	CARPET - Aft, left, red	1	
	591 132	J	CARPET - Aft, left, red	1	
	68600-04	A	CARPET - Aft, left, brown	1	
	68600-12	D	CARPET - Aft, left, brown	1	
	68600-06	A	CARPET - Aft, left, blue	1	
	68600-16	B	CARPET - Aft, left, blue	1	
	591 134	J	CARPET - Aft, left, blue	1	
	68600-08	C	CARPET - Aft, left, black	1	
	68600-14	B	CARPET - Aft, left, black	1	
	591 133	J	CARPET - Aft, left, black	1	
	68600-18	E	CARPET - Aft, left, fawn	1	
	68600-20	E	CARPET - Aft, left, green	1	
	591 136	J	CARPET - Aft, left, green	1	
	591 531	AC	CARPET - Aft, left, heather	1	
	591 532	AP	CARPET - Aft, left, monaco	1	
	591 672	AQ	CARPET - Aft, left, palm	1	
	591 673	AQ	CARPET - Aft, left, royal blue	1	
	591 674	AQ	CARPET - Aft, left, raspberry	1	
	591 675	AQ	CARPET - Aft, left, brown	1	
	68600-03	A	CARPET - Aft, right, red	1	
	68600-11	B	CARPET - Aft, right, red	1	
	591 137	J	CARPET - Aft, right, red	1	
	68600-05	A	CARPET - Aft, right, brown	1	
	68600-13	D	CARPET - Aft, right, brown	1	
	68600-07	A	CARPET - Aft, right, blue	1	
	68600-17	B	CARPET - Aft, right, blue	1	
	591 139	J	CARPET - Aft, right, blue	1	
	68600-09	C	CARPET - Aft, right, black	1	
	68600-15	B	CARPET - Aft, right, black	1	
	591 138	J	CARPET - Aft, right, black	1	
	68600-19	E	CARPET - Aft, right, fawn	1	
	68600-21	E	CARPET - Aft, right, green	1	
	591 141	J	CARPET - Aft, right, green	1	
	591 533	AC	CARPET - Aft, right, heather	1	
	591 534	AP	CARPET - Aft, right, monaco	1	
	591 676	AQ	CARPET - Aft, right, palm	1	
	591 677	AQ	CARPET - Aft, right, royal blue	1	
	591 678	AQ	CARPET - Aft, right, raspberry	1	
	591 679	AQ	CARPET - Aft, right, brown	1	
-8	68595-02	A	CARPET - Aft, left, red	1	
	68595-10	B	CARPET - Aft, left, red	1	
	591 102	J	CARPET - Aft, left, red	1	
	68595-04	A	CARPET - Aft, left, brown	1	
	68595-12	D	CARPET - Aft, left, brown	1	
	68595-06	A	CARPET - Aft, left, blue	1	
	68595-16	B	CARPET - Aft, left, blue	1	
	591 104	J	CARPET - Aft, left, blue	1	

When ordering, always specify Part Number, Description and Serial Number of Aircraft

PIPER PARTS CATALOG

Figure and Index Number	Part Number	Code	NOMENCLATURE	No. Req	SERIAL NUMBERS AFFECTED
25-8	68595-08	C	CARPET - Aft, left, black	1	
	68595-14	B	CARPET - Aft, left, black	1	
	591 103	J	CARPET - Aft, left, black	1	
	68595-18	E	CARPET - Aft, left, fawn	1	
	68595-20	E	CARPET - Aft, left, green	1	
	591 106	J	CARPET - Aft, left, green	1	
	591 553	AC	CARPET - Aft, left, heather	1	
	591 554	AP	CARPET - Aft, left, monaco	1	
	591 716	AQ	CARPET - Aft, left, palm	1	
	591 717	AQ	CARPET - Aft, left, royal blue	1	
	591 718	AQ	CARPET - Aft, left, raspberry	1	
	591 719	AQ	CARPET - Aft, left, brown	1	
	79236-19	H.AF	CARPET - Aft, left	1	
	79236-27	H.AG	CARPET - Aft, left	1	
	68595-03	A	CARPET - Aft, right, red	1	
	68595-11	B	CARPET - Aft, right, red	1	
	591 107	J	CARPET - Aft, right, red	1	
	68595-05	A	CARPET - Aft, right, brown	1	
	68595-13	D	CARPET - Aft, right, brown	1	
	68595-07	A	CARPET - Aft, right, blue	1	
	68595-17	B	CARPET - Aft, right, blue	1	
	591 109	J	CARPET - Aft, right, blue	1	
	68595-09	C	CARPET - Aft, right, black	1	
	68595-15	B	CARPET - Aft, right, black	1	
	591 108	J	CARPET - Aft, right, black	1	
	68595-19	E	CARPET - Aft, right, fawn	1	
	68595-21	E	CARPET - Aft, right, green	1	
	591 111	J	CARPET - Aft, right, green	1	
	591 555	AC	CARPET - Aft, right, heather	1	
	591 556	AP	CARPET - Aft, right, monaco	1	
	591 720	AQ	CARPET - Aft, right, palm	1	
	591 721	AQ	CARPET - Aft, right, royal blue	1	
	591 722	AQ	CARPET - Aft, right, raspberry	1	
	591 723	AQ	CARPET - Aft, right, brown	1	
	79236-20	H.AF	CARPET - Aft, right	1	
	79236-28	H.AG	CARPET - Aft, right	1	
-9	68598-02	A	CARPET ASSEMBLY - Aft tunnel, red	1	
	68598-06	B	CARPET ASSEMBLY - Aft tunnel, red	1	
	591 117	J	CARPET ASSEMBLY - Aft tunnel, red	1	
	68598-03	A	CARPET ASSEMBLY - Aft tunnel, brown	1	
	68598-07	D	CARPET ASSEMBLY - Aft tunnel, brown	1	
	68598-04	A	CARPET ASSEMBLY - Aft tunnel, blue	1	
	68598-09	B	CARPET ASSEMBLY - Aft tunnel, blue	1	
	591 119	J	CARPET ASSEMBLY - Aft tunnel, blue	1	
	68598-05	C	CARPET ASSEMBLY - Aft tunnel, black	1	
	68598-08	B	CARPET ASSEMBLY - Aft tunnel, black	1	
	591 118	J	CARPET ASSEMBLY - Aft tunnel, black	1	
	69563-02	E	CARPET ASSEMBLY - Aft tunnel, fawn	1	
	69563-03	E	CARPET ASSEMBLY - Aft tunnel, green	1	
	591 121	J	CARPET ASSEMBLY - Aft tunnel, green	1	
	591 563	AC	CARPET ASSEMBLY - Aft tunnel, heather	1	
	591 564	AP	CARPET ASSEMBLY - Aft tunnel, monaco	1	
	591 744	AQ	CARPET ASSEMBLY - Aft tunnel, palm	1	
	591 745	AQ	CARPET ASSEMBLY - Aft tunnel, royal blue	1	
	591 746	AQ	CARPET ASSEMBLY - Aft tunnel, raspberry	1	
	591 747	AQ	CARPET ASSEMBLY - Aft tunnel, brown	1	
-10	68596-02	A	CARPET - Aft, left, red	1	
	68596-10	B	CARPET - Aft, left, red	1	
	591 087	J	CARPET - Aft, left, red	1	

When ordering, always specify Part Number, Description and Serial Number of Aircraft

PIPER PARTS CATALOG

Figure and Index Number	Part Number	Code	NOMENCLATURE	No. Req.	SERIAL NUMBERS AFFECTED
25 10	68596-04	A	CARPET - Aft, left, brown	1	
	68596-12	D	CARPET - Aft, left, brown	1	
	68596-06	A	CARPET - Aft, left, blue	1	
	68596-16	B	CARPET - Aft, left, blue	1	
	591 089	J	CARPET - Aft, left, blue	1	
	68596-08	C	CARPET - Aft, left, black	1	
	68596-14	B	CARPET - Aft, left, black	1	
	591 088	J	CARPET - Aft, left, black	1	
	68596-18	E	CARPET - Aft, left, fawn	1	
	68596-20	E	CARPET - Aft, left, green	1	
	591 091	J	CARPET - Aft, left, green	1	
	591 557	AC	CARPET - Aft, left, heather	1	
	591 558	AP	CARPET - Aft, left, monaco	1	
	591 724	AQ	CARPET - Aft, left, palm	1	
	591 725	AQ	CARPET - Aft, left, royal blue	1	
	591 726	AQ	CARPET - Aft, left, raspberry	1	
	591 727	AQ	CARPET - Aft, left, brown	1	
	79236-21	H,AF	CARPET - Aft, left	1	
	79236-29	H,AG	CARPET - Aft, left	1	
	68596-03	A	CARPET - Aft, right, red	1	
	68596-11	B	CARPET - Aft, right, red	1	
	591 092	J	CARPET - Aft, right, red	1	
	68596-05	A	CARPET - Aft, right, brown	1	
	68596-13	D	CARPET - Aft, right, brown	1	
	68596-07	A	CARPET - Aft, right, blue	1	
	68596-17	B	CARPET - Aft, right, blue	1	
	591 094	J	CARPET - Aft, right, blue	1	
	68596-09	C	CARPET - Aft, right, black	1	
	68596-15	B	CARPET - Aft, right, black	1	
	591 093	J	CARPET - Aft, right, black	1	
	68596-19	E	CARPET - Aft, right, fawn	1	
	68596-21	E	CARPET - Aft, right, green	1	
	591 096	J	CARPET - Aft, right, green	1	
	591 559	AC	CARPET - Aft, right, heather	1	
	591 560	AP	CARPET - Aft, right, monaco	1	
	591 728	AQ	CARPET - Aft, right, palm	1	
	591 729	AQ	CARPET - Aft, right, royal blue	1	
	591 730	AQ	CARPET - Aft, right, raspberry	1	
	591 731	AQ	CARPET - Aft, right, brown	1	
	79236-22	H,AF	CARPET - Aft, right	1	
	79236-30	H,AG	CARPET - Aft, right	1	
.11	68593-02	A	CARPET - Aft, left outboard, red	1	
	68593-10	B	CARPET - Aft, left outboard, red	1	
	591 077	J	CARPET - Aft, left outboard, red	1	
	68593-04	A	CARPET - Aft, left outboard, brown	1	
	68593-12	D	CARPET - Aft, left outboard, brown	1	
	68593-06	A	CARPET - Aft, left outboard, blue	1	
	68593-16	B	CARPET - Aft, left outboard, blue	1	
	591 079	J	CARPET - Aft, left outboard, blue	1	
	68593-08	C	CARPET - Aft, left outboard, black	1	
	68593-14	B	CARPET - Aft, left outboard, black	1	
	591 078	J	CARPET - Aft, left outboard, black	1	
	68593-18	E	CARPET - Aft, left outboard, fawn	1	
	68593-20	E	CARPET - Aft, left outboard, green	1	
	591 081	J	CARPET - Aft, left outboard, green	1	
	591 565	AC	CARPET - Aft, left outboard, heather	1	
	591 566	AP	CARPET - Aft, left outboard, monaco	1	

When ordering, always specify Part Number, Description and Serial Number of Aircraft

PIPER PARTS CATALOG

Figure and Index Number	Part Number	Code	NOMENCLATURE	No. Req.	SERIAL NUMBERS AFFECTED
25-11	591 768	AQ	CARPET - Aft, left outboard, palm	1	
	591 769	AQ	CARPET - Aft, left outboard, royal blue	1	
	591 770	AQ	CARPET - Aft, left outboard, raspberry	1	
	591 771	AQ	CARPET - Aft, left outboard, brown	1	
	68593-03	A	CARPET - Aft, right outboard, red	1	
	68593-11	B	CARPET - Aft, right outboard, red	1	
	591 082	J	CARPET - Aft, right outboard, red	1	
	68593-05	A	CARPET - Aft, right outboard, brown	1	
	68593-13	D	CARPET - Aft, right outboard, brown	1	
	68593-07	A	CARPET - Aft, right outboard, blue	1	
	68593-17	B	CARPET - Aft, right outboard, blue	1	
	591 084	J	CARPET - Aft, right outboard, blue	1	
	68593-08	C	CARPET - Aft, right outboard, black	1	
	68593-15	B	CARPET - Aft, right outboard, black	1	
	591 083	J	CARPET - Aft, right outboard, black	1	
	68593-18	E	CARPET - Aft, right outboard, fawn	1	
	68593-21	E	CARPET - Aft, right outboard, green	1	
	591 086	J	CARPET - Aft, right outboard, green	1	
	591 567	AC	CARPET - Aft, right outboard, heather	1	
	591 568	AP	CARPET - Aft, right outboard, monaco	1	
	591 772	AQ	CARPET - Aft, right outboard, palm	1	
	591 773	AQ	CARPET - Aft, right outboard, royal blue	1	
	591 774	AQ	CARPET - Aft, right outboard, raspberry	1	
	591 775	AQ	CARPET - Aft, right outboard, brown	1	
-12	68597-02	A	CARPET - Aft, left, red	1	
	68597-10	B	CARPET - Aft, left, red	1	
	591 097	J	CARPET - Aft, left, red	1	
	68597-04	A	CARPET - Aft, left, brown	1	
	68597-12	D	CARPET - Aft, left, brown	1	
	68597-06	A	CARPET - Aft, left, blue	1	
	68597-16	B	CARPET - Aft, left, blue	1	
	591 099	J	CARPET - Aft, left, blue	1	
	68597-08	C	CARPET - Aft, left, black	1	
	68597-14	B	CARPET - Aft, left, black	1	
	591 098	J	CARPET - Aft, left, black	1	
	68597-18	E	CARPET - Aft, left, fawn	1	
	68597-20	E	CARPET - Aft, left, green	1	
	591 101	J	CARPET - Aft, left, green	1	
	79236-23	F,G,H	CARPET - Aft, left	1	
	591 523	AC	CARPET - Aft, left, heather	1	
	591 524	AP	CARPET - Aft, left, monaco	1	
	591 658	AQ	CARPET - Aft, left, palm	1	
	591 657	AQ	CARPET - Aft, left, royal blue	1	
	591 656	AQ	CARPET - Aft, left, raspberry	1	
	591 659	AQ	CARPET - Aft, left, brown	1	
	68597-03	A	CARPET - Aft, right, red	1	
	68597-11	B	CARPET - Aft, right, red	1	
	591 112	J	CARPET - Aft, right, red	1	
	68597-05	A	CARPET - Aft, right, brown	1	
	68597-13	D	CARPET - Aft, right, brown	1	
	68597-07	A	CARPET - Aft, right, blue	1	
	68597-17	B	CARPET - Aft, right, blue	1	
	591 114	J	CARPET - Aft, right, blue	1	
	68597-09	C	CARPET - Aft, right, black	1	
	68597-15	B	CARPET - Aft, right, black	1	
	591 113	J	CARPET - Aft, right, black	1	
	68597-19	E	CARPET - Aft, right, fawn	1	

PIPER PARTS CATALOG

Figure and Index Number	Part Number	Code	NOMENCLATURE	No. Req.	SERIAL NUMBERS AFFECTED
25-12	68597-21	E	CARPET - Aft, right, green	1	
	591 116	J	CARPET - Aft, right, green	1	
	79236-24	F,G,H	CARPET - Aft, right	1	
	591 525	AC	CARPET - Aft, right, heather	1	
	591 526	AP	CARPET - Aft, right, monaco	1	
	591 660	AQ	CARPET - Aft, right, palm	1	
	591 661	AQ	CARPET - Aft, right, royal blue	1	
	591 662	AQ	CARPET - Aft, right, raspberry	1	
	591 663	AQ	CARPET - Aft, right, brown	1	
-13	68599-02	A	CARPET - Aft, red	1	
	68599-06	B	CARPET - Aft, red	1	
	591 122	J	CARPET - Aft, red	1	
	68599-03	A	CARPET - Aft, brown	1	
	68599-07	D	CARPET - Aft, brown	1	
	68599-04	A	CARPET - Aft, blue	1	
	68599-09	B	CARPET - Aft, blue	1	
	591 124	J	CARPET - Aft, blue	1	
	68599-05	C	CARPET - Aft, black	1	
	68599-08	B	CARPET - Aft, black	1	
	591 123	J	CARPET - Aft, black	1	
	68599-10	E	CARPET - Aft, fawn	1	
	68599-11	E	CARPET - Aft, green	1	
	591 126	J	CARPET - Aft, green	1	
	79236-25	F,G,H	CARPET - Aft	1	
	591 529	AC	CARPET - Aft, heather	1	
	591 528	AP	CARPET - Aft, monaco	1	
	591 668	AQ	CARPET - Aft, palm	1	
	591 669	AQ	CARPET - Aft, royal blue	1	
	591 670	AQ	CARPET - Aft, raspberry	1	
	591 671	AQ	CARPET - Aft, brown	1	
-14	68532-00	K	PANEL - Floor center	1	
	68592-03	L,AD	PANEL - Floor center	1	
	68532-02	K,M	PANEL - Floor center	1	
	68592-02	M,P	PANEL - Floor center	1	
	68592-03	M,O	PANEL - Floor center	1	
	79827-03	M,AQ	PANEL - Floor	1	
	96697-04	Q,AQ	PANEL ASSEMBLY - Floor center	1	32R-7680001 to 32R-7780188 incl
	79805-05	Q,AQ	PANEL - Floor	1	32R-7780189 and up
-15	68590-02	A	CARPET - Center, red	1	
	68590-06	B	CARPET - Center, red	1	
	591 067	J	CARPET - Center, red	1	
	68590-03	A	CARPET - Center, brown	1	
	68590-07	D	CARPET - Center, brown	1	
	68590-04	A	CARPET - Center, blue	1	
	68590-09	B	CARPET - Center, blue	1	
	591 069	J	CARPET - Center, blue	1	
	68590-05	C	CARPET - Center, black	1	
	68590-08	B	CARPET - Center, black	1	
	591 068	J	CARPET - Center, black	1	
	68590-10	E	CARPET - Center, fawn	1	
	68590-11	E	CARPET - Center, green	1	
	591 071	J	CARPET - Center, green	1	
	591 519	AC	CARPET - Center, heather	1	
	591 520	AP	CARPET - Center, monaco	1	
	591 648	AQ	CARPET - Center, palm	1	
	591 649	AQ	CARPET - Center, royal blue	1	
	591 650	AQ	CARPET - Center, raspberry	1	
	591 651	AQ	CARPET - Center, brown	1	

PIPER PARTS CATALOG

Figure and Index Number	Part Number	Code	NOMENCLATURE	No Req	SERIAL NUMBERS AFFECTED
25-16	79440-02	K	PLATE - Seat attachment, aft legs	4	
	99139-00	P	PLATE - Seat attachment, aft legs	4	
	68092-00	N	PLATE - Seat attachment, aft legs, 7th seat	2	
-17	68094-03	AK	PLATE - Seat attachment, forward legs	4	
	99141-03	P	PLATE - Seat attachment, forward legs	4	
	68094-02	Q	PLATE - Seat attachment, forward legs	4	32R-7680001 to 32R-7780188 incl
	99141-02	AO	PLATE - Seat attachment, forward legs	4	
	99141-03	Q	PLATE - Seat attachment, forward legs	4	32R-7780189 and up
	68094-03		PLATE - Seat attachment, forward legs, 7th seat	2	
	68094-03	Q	PLATE - Seat attachment, forward legs, 7th seat	2	32R-7680001 to 32R-7780188 incl
	99141-03	Q	PLATE - Seat attachment, forward legs, 7th seat	2	32R-7780189 and up
-18	68096-00	AN	PLATE - Seat attachment, forward legs	4	
	99140-00	P	PLATE - Seat attachment, forward legs	4	
	99140-00	AL	PLATE - Seat attachment, forward legs	4	
	68096-00		PLATE - Seat attachment, forward, 7th seat	2	
-19	68093-00	K	CLIP - Seat attachment, aft legs	8	
	99142-00	P	CLIP - Seat attachment, aft legs	8	
	68093-00	N	CLIP - Seat attachment, aft legs, 7th seat	4	
-20	414 762	RW	SCREW - (MS24693-S51) 52 L	64	
	410 039	RW	SCREW - (MS24693-S53) 87 L	64	
	410 059	Q	SCREW - (MS24693-S55)	64	
	477 683		TEE NUT - (SS-58162)	64	
21	68551-00	S	SLEEVE - Trim	2	
21a	99752-00	T	RING - Boot attachment	2	
-22	68667-00		ANGLE - Forward baggage floorboard	1	
-23	68661-00		STRIP - Scuff, forward baggage	1	
-24	68664-02	A	CARPET - Forward baggage, red	1	
	68664-06	B	CARPET - Forward baggage, red	1	
	591 410	U	CARPET - Forward baggage, red	1	
	591 415	Q	CARPET - Forward baggage, red	1	32R-7680001 to 32R-7680538 incl
	68664-03	A	CARPET - Forward baggage, brown	1	
	68664-07	B	CARPET - Forward baggage, brown	1	
	68664-04	A	CARPET - Forward baggage, blue	1	
	68664-08	B	CARPET - Forward baggage, blue	1	
	591 411	U	CARPET - Forward baggage, blue	1	
	591 417	Q	CARPET - Forward baggage, blue	1	32R-7680001 to 32R-7680538 incl
	68664-05	C	CARPET - Forward baggage, black	1	
	68664-09	B	CARPET - Forward baggage, black	1	
	591 412	U	CARPET - Forward baggage, black	1	
	591 416	Q	CARPET - Forward baggage, black	1	32R-7680001 to 32R-7680538 incl
	68663-10	E	CARPET - Forward baggage, fawn	1	
	68663-11	E	CARPET - Forward baggage, green	1	
	591 414	U	CARPET - Forward baggage, green	1	
	591 418	Q	CARPET - Forward baggage, green	1	32R-7680001 to 32R-7680538 incl
	591 541	AE	CARPET - Forward baggage, heather	1	
	591 542	AR	CARPET - Forward baggage, monaco	1	
	591 692	AS	CARPET - Forward baggage, palm	1	
	591 693	AS	CARPET - Forward baggage, royal blue	1	
	591 694	AS	CARPET - Forward baggage, raspberry	1	
	591 695	AS	CARPET - Forward baggage, brown	1	
	591 483	Q	CARPET - Forward baggage, heather	1	32R-7780001 and up
	591 484	Q	CARPET - Forward baggage, monaco	1	32R-7780001 to 32R-7780549 incl
	591 600	Q	CARPET - Forward baggage, palm	1	32R-7880001 and up
	591 601	Q	CARPET - Forward baggage, royal blue	1	32R-7880001 and up
	591 602	Q	CARPET - Forward baggage, raspberry	1	32R-7880001 and up
	591 603	Q	CARPET - Forward baggage, brown	1	32R-7880001 and up

When ordering, always specify Part Number, Description and Serial Number of Aircraft

PIPER PARTS CATALOG

Figure and Index Number	Part Number	Code	NOMENCLATURE	No Req.	SERIAL NUMBERS AFFECTED
25-25	68660-02	A	CARPET - Forward, upper baggage, red	1	
	69660-06	B	CARPET - Forward, upper baggage, red	1	
	591 405	U	CARPET - Forward, upper baggage, red	1	
	591 419	Q	CARPET - Forward, upper baggage, red	1	32R-7680001 to 32R-7680538 incl
	68660-03	A	CARPET - Forward, upper baggage, brown	1	
	68660-07	B	CARPET - Forward, upper baggage, brown	1	
	68660-04	A	CARPET - Forward, upper baggage, blue	1	
	68660-08	B	CARPET - Forward, upper baggage, blue	1	
	591 407	U	CARPET - Forward, upper baggage, blue	1	
	591 421	Q	CARPET - Forward, upper baggage, blue	1	32R-7680001 to 32R-7680538 incl
	68660-05	C	CARPET - Forward, upper baggage, black	1	
	68660-09	B	CARPET - Forward, upper baggage, black	1	
	591 406	U	CARPET - Forward, upper baggage, black	1	
	591 420	Q	CARPET - Forward, upper baggage, black	1	32R-7680001 to 32R-7680538 incl
	68660-10	E	CARPET - Forward, upper baggage, fawn	1	
	68660-11	E	CARPET - Forward, upper baggage, green	1	
	591 409	U	CARPET - Forward, upper baggage, green	1	
	591 422	Q	CARPET - Forward, upper baggage, green	1	32R-7680001 to 32R-7680538 incl
	591 539	AE	CARPET - Forward, upper baggage, heather	1	
	591 540	AR	CARPET - Forward, upper baggage, monaco	1	
	591 688	AS	CARPET - Forward, upper baggage, palm	1	
	591 689	AS	CARPET - Forward, upper baggage, royal blue	1	
	591 690	AS	CARPET - Forward, upper baggage, raspberry	1	
	591 691	AS	CARPET - Forward, upper baggage, brown	1	
	591 485	Q	CARPET - Forward, upper baggage, heather	1	32R-7780001 and up
	591 486	Q	CARPET - Forward, upper baggage, monaco	1	32R-7780001 to 32R-7780549 incl
	591 604	Q	CARPET - Forward, upper baggage, palm	1	32R-7880001 and up
	591 605	Q	CARPET - Forward, upper baggage, royal blue	1	32R-7880001 and up
	591 606	Q	CARPET - Forward, upper baggage, raspberry	1	32R-7880001 and up
	591 607	Q	CARPET - Forward, upper baggage, brown	1	32R-7880001 and up
-26	68611-00		PLATE - Heel (aluminum)	2	
-27	68613-00		STRIP - Trim	2	
-28	65725-02	S	COVER - Seat belt attachment, red	2	
	69636-03	AH	COVER - Seat belt attachment, red	2	
	65725-03	A	COVER - Seat belt attachment, brown	2	
	65725-06	AB	COVER - Seat belt attachment, brown	2	
	69636-06	AH	COVER - Seat belt attachment, brown	2	
	65725-04	A	COVER - Seat belt attachment, blue	2	
	65725-07	X	COVER - Seat belt attachment, blue	2	
	65725-09	Z	COVER - Seat belt attachment, blue/green	2	
	69636-04	AH	COVER - Seat belt attachment, blue/green	2	
	65725-05	V	COVER - Seat belt attachment, black	2	
	69636-05	TAU	COVER - Seat belt attachment	2	
	65725-08	Y	COVER - Seat belt attachment, green	2	
	69636-02	AH	COVER - Seat belt attachment, green	2	
-29	79440-00	AA,AD	RETAINER ASSEMBLY - Seat attachment, aft legs	6	
	79781-02	AD,AL	RETAINER ASSEMBLY - Seat attachment, aft legs	6	

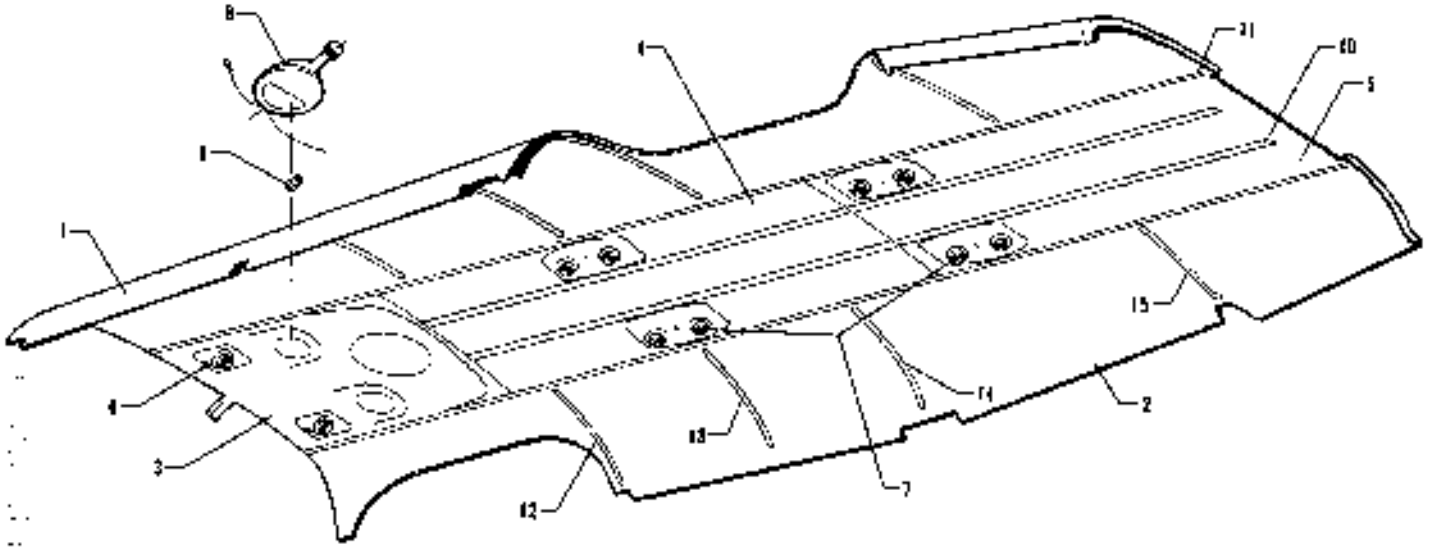

Figure 26. Headliner Installation
(PA-32-260 - Serial Nos. 32-1 to 32-7300076 Inclusive)
(PA-32-300 - Serial Nos. 32-40000 to 32-7340201 Inclusive)

CODE EXPLANATIONS FOR FIGURE 28

A - Used on PA-32-260 with serial numbers 32-1 to 32-7300076 inclusive, and PA-32-300 with serial numbers 32-40000 to 32-7340201 inclusive.
B - Used on PA-32-260 with serial numbers 32-1 to 32-1110 inclusive, and PA-32-300 with serial numbers 32-40000 to 32-40565 inclusive.
C - Used on PA-32-260 with serial numbers 32-1111 to 32-7300076 inclusive, and PA-32-300 with serial numbers 32-40566 to 32-7340201 inclusive.
D - Used on PA-32-260 with serial numbers 32-1111 to 32-1320 inclusive, and PA-32-300 with serial numbers 32-40566 to 32-41018 inclusive.
E - Used on PA-32-260 with serial numbers 32-7100001 to 32-7300076 inclusive, and PA-32-300 with serial numbers 32-7140001 to 32-7340201 inclusive.
F - With ventilator and light cutouts.
G - With ventilator and speaker cutouts.
H - With ventilator, speaker and light cutouts.
J - See Figure 43 if air conditioning is installed on PA-32-300.
K - Used on PA-32-260 with serial numbers 32-1 to 32-1320 inclusive, and PA-32-300 with serial numbers 32-40000 to 32-41018 inclusive.
L - Used on PA-32-260 with serial numbers 32-7200001 to 32-7300076 inclusive, and PA-32-300 with serial numbers 32-7240001 to 32-7340201 inclusive.
M - Used on PA-32-260 with serial numbers 32-1 to 32-7100038 inclusive, and PA-32-300 with serial numbers 32-40000 to 32-7140088 inclusive.
N - Used on PA-32-260 with serial numbers 32-7300001 to 32-7300076 inclusive, and PA-32-300 with serial numbers 32-7340001 to 32-7340201 inclusive.
O - Used on PA-32-260 with serial numbers 32-1 to 32-7200055 inclusive, and PA-32-300 with serial numbers 32-40000 to 32-7240147 inclusive.
P - Used on PA-32-260 with serial numbers 32-1 to 32-11, 32-15, 32-18, 32-19, 32-21, 32-22, 32-27, 32-30 to 32-55, 32-57 to 32-81 inclusive.
Q - Used on PA-32-260 with serial numbers 32-12 to 32-14, 32-16, 32-17, 32-20, 32-23 to 32-26, 32-28, 32-29, 32-56, 32-82 to 32-1320 inclusive, PA-32-300 with serial numbers 32-40000 to 32-41018 inclusive.

PIPER PARTS CATALOG

Figure and Index Number	Part Number	Code	NOMENCLATURE	No. Req.	SERIAL NUMBERS AFFECTED
26-	68411	K	DRAWING - Headliner Installation		
	69450	E	DRAWING - Headliner Installation		
-1	68546-00	B	HEADLINER - Left, antique white	1	
	68546-02	C	HEADLINER - Left, chalk white	1	
-2	68546-00	B	HEADLINER - Right, antique white	1	
	68546-02	C	HEADLINER - Right, chalk white	1	
-3	68439-02	B	PANEL - Overhead, forward, sand	1	
	68439-06	D	PANEL - Overhead, forward, white	1	
	68439-10	B,J	PANEL - Overhead, forward, white	1	
	68439-03	B,F	PANEL - Overhead, forward, sand	1	
	68439-07	D,F	PANEL - Overhead, forward, white	1	
	68439-11	E,F,J	PANEL - Overhead, forward, white	1	
	68439-04	B,G	PANEL - Overhead, forward, sand	1	
	68439-08	D,G	PANEL - Overhead, forward, white	1	
	68439-12	E,G,J	PANEL - Overhead, forward, white	1	
	68439-05	B,H	PANEL - Overhead, forward, sand	1	
	68439-09	D,H	PANEL - Overhead, forward, white	1	
	68439-13	E,H,J	PANEL - Overhead, forward, white	1	
-4	68443-00	B	PANEL - Overhead, center, sand	1	
	68443-02	C,J	PANEL - Overhead, center, white	1	
-5	68445-00	B	PANEL - Overhead, rear, sand	1	
	68445-02	C,J	PANEL - Overhead, rear, white	1	
-6	462 006	K	GASPER ASSEMBLY - Forward air vent (10-0026-3)	2	
	68449-00	E	GASPER ASSEMBLY - Forward air vent	2	
-7	462 007	K	GASPER ASSEMBLY - Center and rear air vent	4	
	68448-00	E	GASPER ASSEMBLY - Center and rear air vent	4	
	484 299	Q	LIGHT AND GASPER ASSEMBLY - Center and rear air vent	4	
	484 300	P	LIGHT AND GASPER ASSEMBLY - Center and rear air vent	4	
	68446-00	E	LIGHT AND GASPER ASSEMBLY - Center and rear air vent	4	
-8	472 724	B	LIGHT ASSEMBLY - Forward (15-0083-1)	2	
	472 908	C	LIGHT ASSEMBLY - Forward (15-0083-9)	2	
-9	472 034		BULB - Forward light (1414)	1	
-10	68412-00		RETAINER - Headliner	2	
-11	68413-00		RETAINER - Headliner	2	
-12	63142-23	Q	TRIM STRIP - Headliner, front (12.20 L.)	2	
	63142-16	N	TRIM STRIP - Headliner, front (11.50 L.)	2	
-13	63142-24	M	TRIM STRIP - Headliner, center (12.90 L.)	2	
	63142-17	L	TRIM STRIP - Headliner, center (5.00 L.)	2	
-14	63142-24	Q	TRIM STRIP - Headliner, center (12.90 L.)	2	
	63142-23	N	TRIM STRIP - Headliner, center (12.20 L.)	2	
-15	63142-22	Q	TRIM STRIP - Headliner, rear (10.90 L.)	2	
	63142-22	N	TRIM STRIP - Headliner, rear (10.90 L.) Left	1	
	63142-41	N	TRIM STRIP - Headliner, rear (10.20 L.) Right	1	

When ordering, always specify Part Number, Description and Serial Number of Aircraft

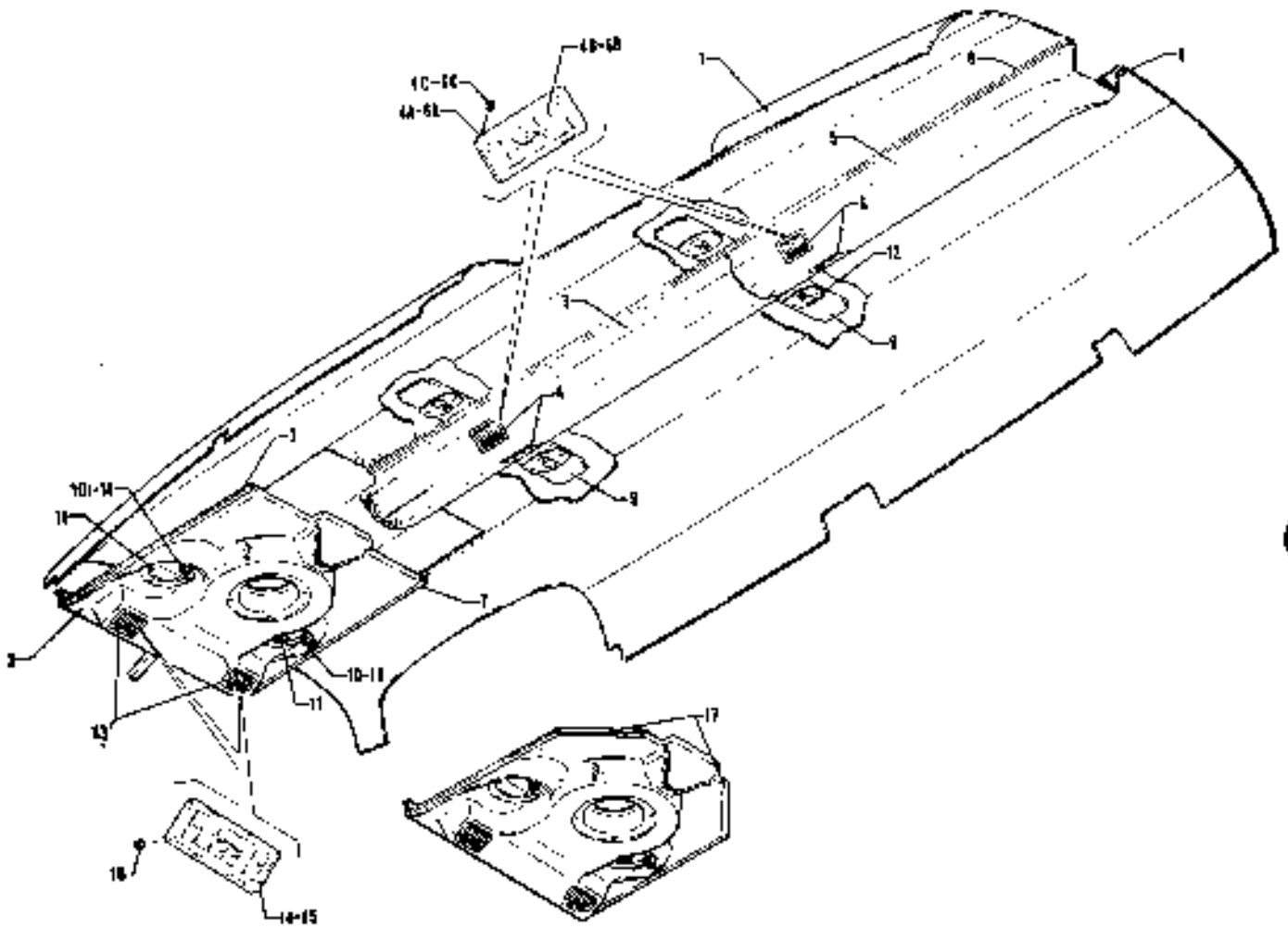

Figure 27 Headliner and Forward Fresh Air Duct Installation
(PA-32-260 - Serial Nos. 32-7400001 and up)
(PA-32-300 - Serial Nos. 32-7440001 and up)
(PA-32R-300 - Serial Nos 32R-7680001 and up)

CODE EXPLANATIONS FOR FIGURE 27

A - Used on PA-32-260 with serial numbers 32-7400001 and up, PA-32-300 with serial numbers 32-7440001 and up, and PA-32R-300
B - Used on PA-32-260 with serial numbers 32-7400001 to 32-7600033 incl , PA-32-300 with serial numbers 32-7440001 to 32-7640142 incl , and PA-32R-300 with serial numbers 32R-7680001 to 32R-7680538 incl
C - Used on PA-32-260 with serial numbers 32-7700001 and up, PA-32-300 with serial numbers 32-7740001 and up, and PA-32R-300 with serial numbers 32R-7780001 and up
D - Used on PA-32-260 with serial numbers 32-7400001 to 32-7500011 incl , and PA-32-300 with serial numbers 32-7440001 to 32-7540082 incl Order P/N 69749-04 Fresh Air Flapper Valve Kit 760 802 has been installed per Service Letter 738A
E - Used on PA-32-260 with serial numbers 32-7600012 to 32-7600033 incl , PA-32-300 with serial numbers 32 7540083 to 32-7640142 incl , and PA-32R-300 with serial numbers 32R-7680001 to 32R-7680538 incl
F - Used on PA-32-260 with serial numbers 32 7400001 to 32-7600001 incl , PA-32-300 with serial numbers 32-7440001 to 32-7640029 incl , and PA-32R-300 with serial numbers 32R-7680001 to 32R-7680013 incl
G - Used on PA-32-260 with serial numbers 32-7600002 and up, PA-32-300 with serial numbers 32-7640030 to 32-7940180 incl , and PA-32R-300 with serial numbers 32R-7680014 and up
H - Used on PA-32-260 with serial numbers 32-7700001 and up, PA-32-300 with serial numbers 32-7740002 and up, and PA 32R 300 with serial numbers 32R-7780001 and up
J - Used on PA-32-260 with serial numbers 32-7400001 to 32-7600033 incl , PA-32-300 with serial numbers 32-7440001 to 32-7640142 incl , and PA-32R-300 with serial numbers 32R-7680001 to 32R-7680538 incl
K - Used on PA-32-260 with serial numbers 32-7400001 and up, PA-32-300 with serial numbers 32-7440001 to 32-7940180 incl , and PA-32R-300
L - Used on PA-32-300 only

PIPER PARTS CATALOG

Figure and Index Number	Part Number	Code	NOMENCLATURE	No. Req.	SERIAL NUMBERS AFFECTED
27-	69812		DRAWING - Headliner Installation		
-1	69813-00		HEADLINER ASSEMBLY	2	
-2	69746-02	F	PANEL ASSEMBLY - Fresh air vent	1	
	69746-12	G	PANEL ASSEMBLY - Fresh air vent	1	
	69969-03	L	PANEL ASSEMBLY - Fresh air vent (with speaker hole)	1	32-7940181 and up
	69969-02	L	PANEL ASSEMBLY - Fresh air vent (without speaker hole)	1	32-7940181 and up
-3	69749-00	D	DUCT ASSEMBLY - Fresh air vent, forward	1	
	69749-04	E	DUCT ASSEMBLY - Fresh air vent, forward	1	
	69749-06	H	DUCT ASSEMBLY - Fresh air vent, forward	1	
-4	492 338	B	* VENT ASSEMBLY - (PS10023-16)	2	
-4a	473 187	C	* LOUVER - (136-1M)	2	
-4b	461 386	C	* FRAME - (173-M)	2	
-4c	406 424		* NUT - (C2733-040-1)	8	
-5	69751-00	J	DUCT ASSEMBLY - Fresh air vent, center	1	
	69751-06	H	DUCT ASSEMBLY - Fresh air vent, center	1	
6	492 338	B	* VENT ASSEMBLY - (PS10023-16)	2	
-6a	473 187	C	* LOUVER - (136-1M)	2	
-6b	461 386	C	* FRAME - (173-M)	2	
-6c	406 424		* NUT - (C2733-040-1)	8	
-7	79246-01	K	RETAINER - Front, left	1	
	79246-00	K	RETAINER - Front, right	1	
	79246-04	L	RETAINER - Front, left	1	32-7940181 and up
	79246-06	L	RETAINER - Front, right	1	32-7940181 and up
-8	79246-02	K	RETAINER - Rear	2	
	79246-06	L	RETAINER - Rear, left	1	32-7940181 and up
	79246-07	L	RETAINER - Rear, right	1	32-7940181 and up
-9	69748-00		CHANNEL - Light assembly	2	
-10	95228-00		DIMMER ASSEMBLY - Potentiometer	2	
-11	472 908		LIGHT ASSEMBLY - Forward (15-0083-9)	2	
-12	472 877		LIGHT ASSEMBLY - Reading	4	
-13	492 339	B	VENT ASSEMBLY - (PS10023-17)	2	
-14	473 187	C	LOUVER - (136-1M)	2	
-15	461 386	C	FRAME - (173-M)	2	
-16	571 136		KNOB - (PS10067-4-1)	2	
-17	79276-08	L	RETAINER - Center, left	1	32-7940181 and up
	79276-09	L	RETAINER - Center, right	1	32-7940181 and up
-18	406 424		NUT - (C2733-040-1)	8	

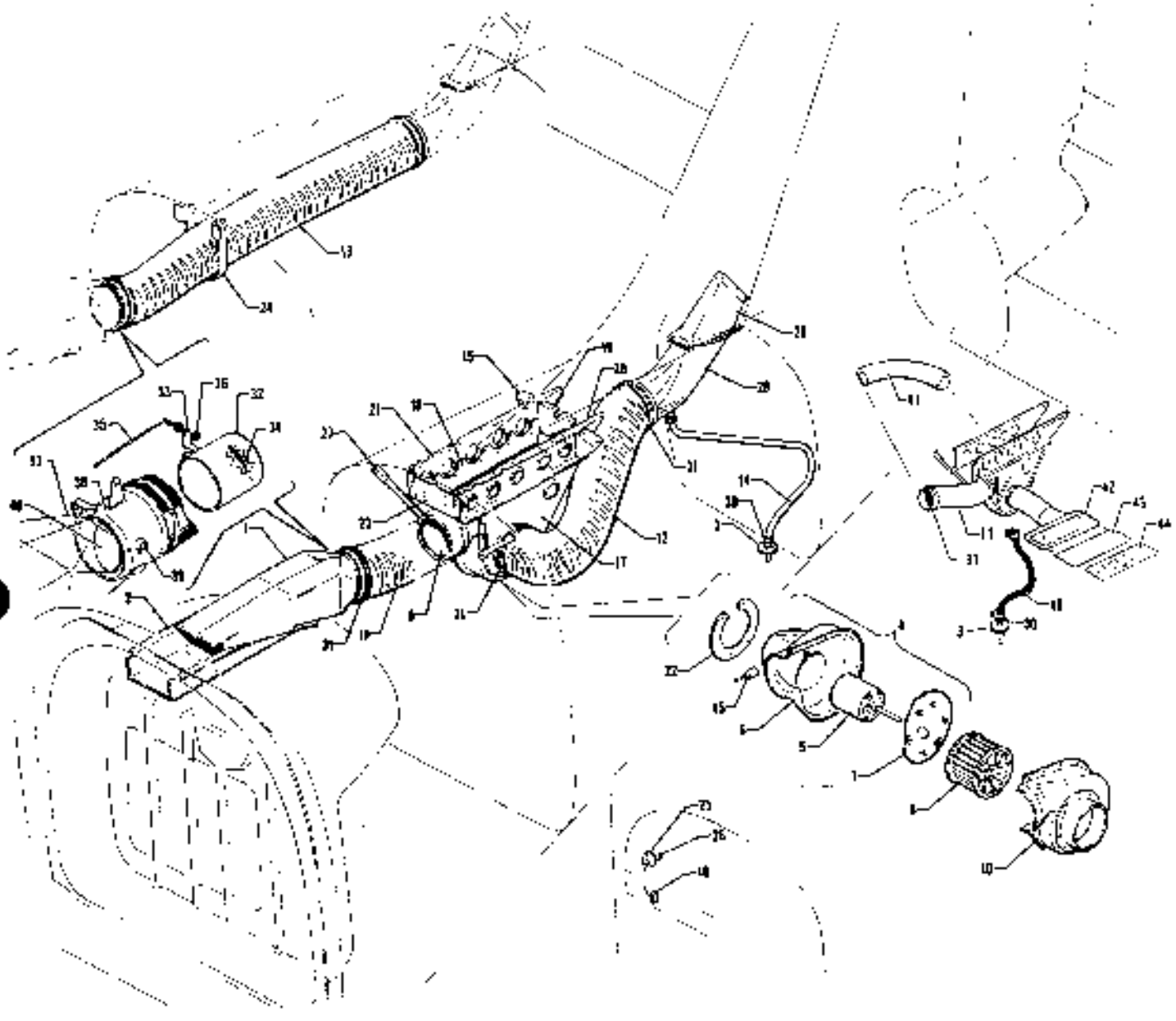

Figure 28 Aft Fresh Air Duct Installation
(PA-32-260 - Serial Nos. 32-7400001 and up)
(PA-32-300 - Serial Nos. 32-7440001 and up)
(PA-32R-300 - Serial Nos. 32R-7680001 and up)

CODE EXPLANATIONS FOR FIGURE 28

A - Used on PA-32-260 with serial numbers 32-7400001 and up, and PA-32-300 with serial numbers 32-7440001 and up, and PA-32R-300

B - Used on PA-32-260 with serial numbers 32-7400001 to 32-7500011 inclusive, and PA-32-300 with serial numbers 32-7440001 to 32-7540082 inclusive

C - Used on PA-32-260 with serial numbers 32-7500012 and up, and PA 32 300 with serial numbers 32-7540083 and up, and PA-32R-300 Also used on PA 32 260 with serial numbers 32-7400001 to 32-7500011 incl., and PA-32-300 with serial numbers 32-7440001 to 32-7540082 incl. if Fresh Air Flapper Valve Kit 760 902 has been installed per Service Letter 738A

D - Used on PA-32-260 with serial numbers 32-7400001 inclusive, PA-32-300 with serial numbers 32-7440001 to 32-7740085 inclusive, and PA-32R-300 with serial numbers 32R-7680001 to 32R-7780441 inclusive

E - Used on PA-32-260 with serial numbers 32-7700021 and up, PA-32-300 with serial numbers 32-7740087 and up, and PA-32R-300 with serial numbers 32R-7780442 and up

F - Used on PA-32-260 with serial numbers 32-7700021 and up, PA-32-300 with serial numbers 32 7740087 and up, and PA-32R-300 with serial numbers 32R 7780442 and up Also used on PA-32-260 with serial numbers 32-7400001 to 32-7700020 inclusive, PA-32-300 with serial numbers 32-7440001 to 32-7740086 inclusive, and PA 32R-300 with serial numbers 32R-7680001 to 32R-7780441 inclusive if Blower Assembly Kit 761 150 has previously been installed

G - Used on PA-32-260 with serial numbers 32-7400001 to 32-7700023 inclusive, PA-32-300 with serial numbers 32-7440001 to 32-7840025 inclusive, and PA-32R-300 with serial numbers 32R-7680001 to 32R-7880031 inclusive Order part for PA-32 260 with serial numbers 32-7800001 and up, PA-32-300 with serial numbers 32-7840026 and up, and PA-32R-300 with serial numbers 32R-7880032 and up if the four position fan switch has been replaced with a three position fan switch

H - Used on PA 32 260 with serial numbers 32-7800001 and up, PA-32-300 with serial numbers 32-7840026 and up, and PA-32R-300 with serial numbers 32R-7880032 and up

J - Used on PA-32-260 with serial numbers 32-7400001 and up, PA-32-300 with serial numbers 32-7440001 to 32-7940180 inclusive, and PA-32R-300

K - Used on PA-32-300 only

L - Used on PA-32-260 with serial numbers 32-7500012 and up, PA-32-300 with serial numbers 32-7540083 to 32-7940180 inclusive, and PA-32R-300 Also used on PA-32-260 with serial numbers 32-7400001 to 32 7500011 inclusive, and PA-32-300 with serial numbers 32-7440001 to 32-7540082 inclusive if Fresh Air Flapper Valve Kit 760 902 has been installed per Service Letter 738A

M - Used on PA-32-260 with serial numbers 32-7400001 and up, PA-32-300 with serial numbers 32-7440001 to 32-7940275, 32-7940277 and up, and PA-32R-300

N - Used on PA-32-260 with serial numbers 32-7500012 and up, PA-32-300 with serial numbers 32-7540083 to 32-7940275, 32-7940277 and up, and PA-32R-300 Also used on PA-32-260 with serial numbers 32-7400001 to 32-7500011 inclusive, and PA-32-300 with serial numbers 32-7440001 to 32-7540082 inclusive if Fresh Air Flapper Valve Kit 760 902 has been installed per Service Letter 738A

W - These parts must be ordered from Service Spares Department, Piper Aircraft Corporation, Lock Haven, Penna

PIPER PARTS CATALOG

Figure and Index Number	Part Number	Code	NOMENCLATURE	No. Req.	SERIAL NUMBERS AFFECTED
28	69747	J	DRAWING - Fresh Air Ventilation System Installation		
	79853	K	DRAWING - Fresh Air Ventilation System Installation		32-7940181 and up
	79278	M	DRAWING - Ram Air Ventilation Installation		
	79279	M	DRAWING - Blower Ventilation Installation		
	36983	K	DRAWING - Ram Air and Blower Ventilation Installation		32-7940276
-1	79192-00	J	INTERCONNECT - Ventilation bulkhead	1	
-2	79308-00	J	DUCT - Ventilation bulkhead	1	
-3	79290-00		TUBE ASSEMBLY - Drain	1	
-4	781 150	D	BLOWER ASSEMBLY KIT - Fresh air	1	
	99642-03	E	BLOWER ASSEMBLY - Fresh air	1	
-5	475 210	F	* MOTOR ASSEMBLY - Fresh air blower (UN-YY1SO62)	1	
-6	37997-02		* COVER - Fresh air blower	1	
-7	99641-00		* PLATE ASSEMBLY - Motor mounting	1	
-8	452 935		* BLOWER - (AE424-316 1)	1	
-9	99633-00		DUCT - Hose connect	1	
-10	79264-00		COVER ASSEMBLY - Fresh air blower	1	
-11	63633-124	B	HOSE	1	
	63633-147	C	HOSE	1	
-12	63633-126	M	HOSE	1	
-13	63633-129	B	HOSE	1	
	63633-153	N	HOSE	1	
14	63904-89	M	HOSE - Drain	1	
-15	79035-00		GUSSET ASSEMBLY - Intercostal	2	
-16	79286-00		BRACKET - Intercostal, aft	1	
-17	79281-00		HANGER ASSEMBLY - Blower, left	1	
-18	79282-00		HANGER ASSEMBLY - Blower, right	1	
-19	454-709		CIRCUIT BREAKER - (PS50120-1-8) 20 amp Mech Products Inc	1	
	454 743	K	CIRCUIT BREAKER - (PS50120-3-36) 20 amp Wood Electric Corp	1	32-7940254 and up
-20	79280-00		INTERCOSTAL - Blower bracket support, left	1	
-21	79287-00		INTERCOSTAL - Blower bracket support, right	1	
-22	79284-00		RETAINER - Housing	1	
23	79285-00		BRACKET - Intercostal, forward	1	
-24	79292-00		STRAP - Fresh air hose support	1	
-25	763 814	G	SWITCH REPLACEMENT KIT - Fan (4 position)	1	
	688 109	H	SWITCH - (MS35058-21) (3 position)	1	
26	571 162		KNOB - (RB-67-1-SB-M)	1	
-27	79303-00		BRACE - Hanger	2	
-28	79270-00	M	FITTING ASSEMBLY - Air duct, upper	1	
-29	79271-00	M	FITTING ASSEMBLY - Air duct, lower	1	
-30	554 861	W	CLAMP - (SAE TY F-4)	2	
-31	554 938	W	CLAMP - (SAE TY F-72)	4	
-32	69885-00	L	FLAPPER VALVE ASSEMBLY - Fresh air intake	1	
-33	69885-02	L	* SHAFT ASSEMBLY	1	
34	69885-03	L	* FLAPPER ASSEMBLY	1	
-35	554 361	C	CABLE ASSEMBLY - Fresh air flapper (PS50148-2-5)	1	
-36	70371-02	C,W	FITTING - Swivel	1	
	70371-03	C,W	STUD - Swivel fitting	1	
	407 564	C,W	WASHER - (AN960-10)	1	
	404 392	C,W	NUT - (AN320 3)	1	
	424 061	C,W	COTTER PIN - (MS24665-132)	1	
-37	69992-02	K	DUCT AND FLAPPER VALVE ASSEMBLY - Aft	1	32-7940181 and up
-38	69885-12	K	* FLAPPER VALVE ASSEMBLY - Fresh air intake	1	32-7940181 and up

When ordering, always specify Part Number, Description and Serial Number of Aircraft

PIPER PARTS CATALOG

Figure and Index Number	Part Number	Code	NOMENCLATURE	No. Req.	SERIAL NUMBERS AFFECTED
28-39	69885-02	K	* * SHAFT ASSEMBLY	1	32-7940181 and up
-40	69886-03	K	* * FLAPPER ASSEMBLY	1	32-7940181 and up
-41	63833-127	K	HOSE - Air vent	1	32-7940276
-42	36615-05	K	DUCT ASSEMBLY - Air vent	1	32-7940276
-43	36616-03	K	* FILTER - Air vent	1	32-7940276
-44	36612-02	K	LOUVER - Air vent	1	32-7940276
-45	63897-06	K	CAPACITOR ASSEMBLY	1	32-7940276
-46	63904-112	K	HOSE - Drain	1	32-7940276

When ordering, always specify Part Number, Description and Serial Number of Aircraft

1H24
INTENTIONALLY LEFT BLANK

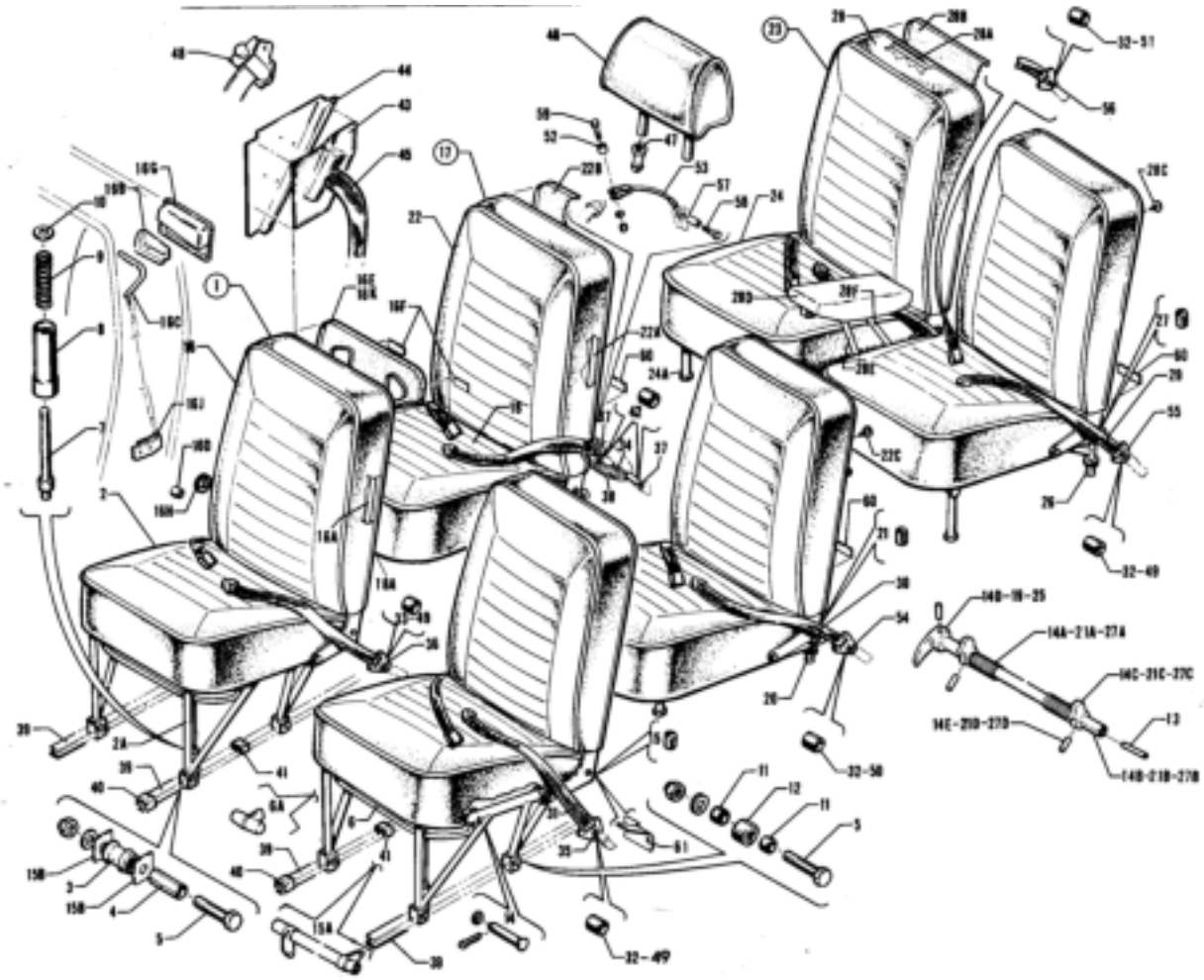

Figure 29. Seats Installation

CODE EXPLANATIONS FOR FIGURE 29

A Refer to Figure 30 or 31 if vertically adjustable front seats are installed and Figure 32B if aft facing center seats are installed
B - Used on PA-32-260 with serial numbers 32-876 to 32-897 incl , and PA-32-300 with serial numbers 32-40000 to 32-40565 incl
C - Used on PA-32-260 with serial numbers 32-898 to 32-1110 inclusive
D - When ordering, specify color red, brown, blue, beige or black
E - When ordering, specify color red, brown, blue or beige
F - Used on PA-32-260 with serial numbers 32-1 to 32-1110 incl , and PA-32-300 with serial numbers 32-40000 to 32-40565 incl
G - Used on PA-32-260 with serial numbers 32-1111 to 32-1250 incl , and PA-32-300 with serial numbers 32-40566 to 32-40850 incl
H - When ordering, specify color red, blue, beige, green, black or white
J - Used on PA-32-260 with serial numbers 32-1111 to 32-7200055 incl , and PA-32-300 with serial numbers 32-40566 to 32-7240147 incl
K - Used on PA-32-260 with serial numbers 32-1251 to 32-1320 incl , and PA-32-300 with serial numbers 32-40851 to 32-41018 incl
L - Used on PA-32-260 with serial numbers 32-7100001 to 32-7100038 incl , and PA-32-300 with serial numbers 32-7140001 to 32-7140086 incl
M - When ordering, specify color red, blue/green, gold, black, white, green, blue, navajo aegis, navajo cactus or yellow/dark red Specify trim color black or camel on 1977 and up model aircraft
N - Used on PA-32-260 with serial numbers 32-7200001 to 32-7200055 incl , and PA-32-300 with serial numbers 32-7240001 to 32-7240147 incl
O - Used on PA-32-260 with serial numbers 32 7300001 and up, PA-32-300 with serial numbers 32-7340001 and up, and PA-32R-300
P - When ordering, specify color red, brown or blue
Q - Used on PA-32-260 with serial numbers 32-7300001 to 32-7500042 incl , and PA-32-300 with serial numbers 32-7340001 to 32-7540167 incl
R - If seat assembly incorporates a "U" shaped handle for the seat track releasing mechanism, order part for PA-32-260 with serial numbers 32-7500043 and up, PA-32-300 with serial numbers 32-7540168 and up, and PA-32R-300
S - Used on PA-32-260 with serial numbers 32-7500043 and up, PA 32-300 with serial numbers 32-7540168 and up, and PA-32R-300
T - Used if seat assembly incorporates a "T" knob for the seat releasing mechanism
U - Used on PA-32 260 with serial numbers 32-7100001 and up, PA-32-300 with serial numbers 32-7140001 and up, and PA-32R-300
V - Used on PA-32-260 with serial numbers 32-1 to 32-1320 incl , and PA-32-300 with serial numbers 32-40000 to 32-41018 incl
W - These parts must be ordered from Service Spares Department, Piper Aircraft Corporation, Lock Haven, Penna
X Used on PA-32-260 with serial numbers 32-1 to 32-7100038 incl , and PA-32-300 with serial numbers 32-40000 to 32-7140086 incl
Y - Used on PA-32-260 with serial numbers 32-1 to 32-7200055 incl , and PA-32-300 with serial numbers 32-40000 to 32-7240147 incl
Z - Used on PA-32-260 with serial numbers 32-7100001 to 32-7200055 incl , and PA-32-300 with serial numbers 32-7140001 to 32-7240147 incl
AA - Used on PA-32-260 with serial numbers 32-7300001 to 32 7400036 incl , and PA-32-300 with serial numbers 32-7300001 to 32-7440104 incl
AB - Used on PA-32-260 with serial numbers 32-7400037 to 32-7500042 incl , and PA-32-300 with serial numbers 32-7440105 to 32-7540167 incl
AC Used on PA-32-260 with serial numbers 32-7400037 and up, PA-32-300 with serial numbers 32-7440105 and up, and PA 32R 300
AD - Used if seat back assembly incorporates handles for seat back and seat track release
AE - Used on PA-32-260 with serial numbers 32-7200001 to 32-7400036 incl , and PA 32-300 with serial numbers 32-7240001 to 32-7440104 incl
AF - If vertically installed seat back and track handles with left and right release movement are installed, order part for PA-32-260 with serial numbers 32-7400037 to 32-7500042 incl , and PA-32-300 with serial numbers 32-7440105 to 32-7640167 incl
AG - Used on PA-32-260 with serial numbers 32-1 to 32-897 incl , and PA-32-300 with serial numbers 32-40000 to 32-40565 incl
AH - Used on PA-32-260 with serial numbers 32-7300001 to 32-7500002 incl , and PA-32-300 with serial numbers 32-7340001 to 32-7540028 incl
AJ - Used on PA-32-260 with serial numbers 32-7500003 to 32-7700011 incl , PA-32-300 with serial numbers 32-7540029 to 32-7740042 incl , and PA-32R-300 with serial numbers 32R-7680001 to 32R-7780188 incl
AK - Used on PA-32-260 with serial numbers 32-1 to 32-7500002 incl , and PA-32-300 with serial numbers 32-40000 to 32-7540039 incl
AL - See Figure 32 if 7th seat is installed
AM - Used if headrest assembly incorporates a flat steel plate for attachment to seat back
AN Used on PA-32-260 with serial numbers 32-1251 to 32-7100038 incl , and PA-32-300 with serial numbers 32-40851 to 32-7140086 incl
AQ - Used on PA-32-260 with serial numbers 32-7400001 to 32-7600033 incl , PA-32-300 with serial numbers 32-7440001 to 32-7640142 incl , and PA-32R-300 with serial numbers 32R-7680001 to 32R-7880538 incl
AP - Ascertain vendor's P/N on Lap Belt If 0108158-11 does not appear, also order matching Shoulder Belt Assembly, P/N 484 224
AQ - Used on PA-32-260 with serial numbers 32-7200001 and up, PA-32-300 with serial numbers 32-7240001 and up, and PA-32R-300
AR - Used if headrest assembly incorporates two round tubes for attachment to seat back
AS - If installing Shoulder Harness Kit 760 365 on PA-32-260 with serial numbers 32-1 to 32-1110 incl , and PA-32-300 with serial numbers 32-40000 to 32-40565 incl , order reel cover with dimensions 9 1/2" x 6"
AT - If installing Shoulder Harness Kit 760 365 on PA-32-260 with serial numbers 32-1111 and up, and PA-32-300 with serial numbers 32-40566 and up, order reel cover with dimensions 12 1/2" x 6"

CODE EXPLANATIONS FOR FIGURE 29 (cont.)

AU - Used on PA-32-260 with serial numbers 32-1031 to 32-1110 incl., and PA-32-300 with serial numbers 32-40456 to 32-40565 incl.
AV - When ordering, specify color olivetone, raspberry, or tan. Specify color midnight blue (color code 785) for PA-32-260 with serial numbers 32-7800001 and up, PA-32-300 with serial numbers 32-7840001 to 32-7940149 incl., and PA-32R-300 with serial numbers 32R-7880001 and up. Specify color dark blue (color code 796) for PA-32-300 with serial numbers 32-7940150 and up. Also specify color of support assemblies, camel or black.
AW - When ordering, specify color camel or black.
AX - Used on PA-32-260 with serial numbers 32-1 to 32-1250 inclusive, and PA-32-300 with serial numbers 32-40000 to 32-40850 incl.
AY - Ascertain vendor's part number on shoulder belt. If 0107116-9 does not appear, also order matching Lap Belt, P/N 551 368.
AZ - Used on PA-32-260 with serial numbers 32-7200001 and up, PA-32-300 with serial numbers 32-7240001 and up, and PA-32R-300.
BA - Used on PA-32-260 with serial numbers 32-876 to 32-1320 inclusive, and PA-32-300 with serial numbers 32-40000 to 32-41018 incl.
BB - Used on PA-32-260 with serial numbers 32-876 to 32-1110 inclusive, and PA-32-300 with serial numbers 32-40000 to 32-40565 incl.
BC - Used on PA-32-260 with serial numbers 32-1111 to 32-1320 inclusive, and PA-32-300 with serial numbers 32-40566 to 32-41018 incl.
BD - Used on PA-32-260 with serial numbers 32-7300001 to 32-7500042 inclusive, and PA-32-300 with serial numbers 32-7340001 to 32-7540167 inclusive.
BE - Used on PA-32-260 with serial numbers 32-1251 to 32-7600033 inclusive, PA-32-300 with serial numbers 32-40851 to 32-7640142 inclusive, and PA-32R-300 with serial numbers 32R-7680001 to 32R-7680538 inclusive.
BF - Used on PA-32-260 with serial numbers 32-7700001 and up, PA-32-300 with serial numbers 32-7740001 and up, and PA-32R-300 with serial numbers 32R-7780001 and up.
BG - Used if rectangular teflon washer is installed.
BH - Used if two pieces of tape are installed on seat frame.
BJ - When ordering, specify color red, blue/green, gold, black, green or bark. Specify "bark 1" for PA-32-260 with serial numbers 32-7700001 to 32-7700013 inclusive, PA-32-300 with serial numbers 32-7740001 to 32-7740044 inclusive, and PA-32R-300 with serial numbers 32R-7780001 to 32R-7780214 inclusive. Specify "Bark II" for PA-32-260 with serial numbers 32-7700014 and up, PA-32-300 with serial numbers 32-7740045 and up, and PA-32R-300 with serial numbers 32R-7780215 and up.
BK - Used on PA-32-260 with serial numbers 32-7500003 to 32-7600033 inclusive, PA-32-300 with serial numbers 32-7540029 to 32-7640142 inclusive, and PA-32R-300 with serial numbers 32R-7680001 to 32R-7680538 inclusive.
BL - See Figure 32B if aft facing center seats are installed.
BM - Used on PA-32-260 with serial numbers 32-1 to 32-7700011 inclusive, PA-32-300 with serial numbers 32-400000 to 32-7740042 inclusive, and PA-32R-300 with serial numbers 32R-7680001 to 32R-7780188 inclusive.
BN - Used if aft facing center seats are installed.
BO - Used on PA-32-260 with serial numbers 32-7700012 and up, Pa-32-300 with serial numbers 32-7740043 and up, and PA-32R-300 with serial numbers 32R-7780189 and up.
BP - Used on PA-32-260 with serial numbers 32-7100001 to 32-7700011 inclusive, PA-32-300 with serial numbers 32-7140001 to 32-7740042 inclusive, and PA-32R-300 with serial numbers 32R-7680001 to 32R-7780188 inclusive.
BQ - Used on PA-32-260 with serial numbers 32-7800001 and up, PA-32-300 with serial numbers 32-7840001 and up, and PA-32R-300 with serial numbers 32R-7880001 and up.
BR - When ordering, specify color olivetone, raspberry or tan. Specify color midnight blue (color code 785) for PA-32-260 with serial numbers 32-7800001 and up, PA-32-300 with serial numbers 32-7840001 to 32-7940149 incl., and PA-32R-300 with serial numbers 32R-7880001 and up. Specify color dark blue (color code 796) for PA-32-300 with serial numbers 32-7940150 and up.
BS - Before ordering, ascertain O.D. at center of seat roller. If O.D. of roller measures .42, (2) rollers P/N 18968-00 must be ordered. If O.D. of roller measures .62, order roller 87332-02 as required.
BT - Reference latest revision to Piper Service Letter 861, applicable to PA-32-260 with serial numbers 32-7300001 to 32-7800008 inclusive, PA-32-300 with serial numbers 32-7340001 to 32-7840192 inclusive, and PA-32R-300 with serial numbers 32R-7680001 to 32R-7880068 inclusive. If the seat backs on the forward facing seats are loose, install Kit 763 890.
BU - Reference latest revision to Piper Service Letter 797, applicable to PA-32-260 with serial numbers 32-7700001 to 32-77000010 inclusive, and PA-32-300 with serial numbers 32-7740001 to 32-7740035 inclusive and PA-32R-300 with serial numbers 32R-7799001 to 32R-7790164 incl. If pilot or co-pilot seats moved to the complete aft position interfere with the rear of the club seats, install Seat Modification Kit 761-110.
BW - Reference latest revision to Piper Service Letter 647, applicable to PA-32-7300001 to 32-7300021 inclusive and PA-32-300 with serial numbers 32-73440001 to 32-7340075. Kit 760-740 contains material and instructions to install a new and improved seat back stop.
BX - If all aircraft seats are not equipped with complete restraint systems (lap belt and shoulder harness), reference latest revision to Piper Service Bulletin 896, which provides shoulder harness kit numbers and a serial number applicability table.

PIPER PARTS CATALOG

Figure and Index Number	Part Number	Code	NOMENCLATURE	No. Req.	SERIAL NUMBERS AFFECTED
29-	68060	F	DRAWING - Seats installation		
	69401	J	DRAWING - Seats installation		
	78087	O	DRAWING - Seats installation		
-1	68061-00	P,BU	SEAT ASSEMBLY - Front	2	32-1 to 32-875
	69085-00	B,P,BU	SEAT ASSEMBLY - Front, left	1	
	66552-00	C,E,BU	SEAT ASSEMBLY - Front, left	1	
	69408-00	D,G,BU	SEAT ASSEMBLY - Front, left	1	
	69408-05	H,K,BU	SEAT ASSEMBLY - Front, left	1	
	99384-04	H,L,BU	SEAT ASSEMBLY - Front, left	1	
	99727-22	M,N,BU	SEAT ASSEMBLY - Front, left	1	
	79337-19	M,O,BU	SEAT ASSEMBLY - Front, left	1	
	79337-45	BQ,BR, BU	SEAT ASSEMBLY - Front, left (luxurious)	1	
	69085-01	B,P,BU	SEAT ASSEMBLY - Front, right	1	
	66552-01	C,E,BU	SEAT ASSEMBLY - Front, right	1	
	69408-01	D,G,BU	SEAT ASSEMBLY - Front, right	1	
	69408-06	H,K,BU	SEAT ASSEMBLY - Front, right	1	
	99384-05	H,L,BU	SEAT ASSEMBLY - Front, right	1	
	99727-05	M,N,BU	SEAT ASSEMBLY - Front, right	1	
	79337-20	M,O,BU	SEAT ASSEMBLY - Front, right	1	
	79337-46	BQ,BR BU	SEAT ASSEMBLY - Front, right (luxurious)	1	
-2	68061-02	P	* CUSHION AND FRAME ASSEMBLY - Front seat, bottom	1	32-1 to 32-875
	69085-04	B,P	* CUSHION AND FRAME ASSEMBLY - Front seat, bottom left	1	
	66552-04	C,E	* CUSHION AND FRAME ASSEMBLY - Front seat, bottom left	1	
	69408-04	D,G	* CUSHION AND FRAME ASSEMBLY - Front seat, bottom left	1	
	69408-09	H,K	* CUSHION AND FRAME ASSEMBLY - Front seat, bottom left	1	
	99384-12	H,L	* CUSHION AND FRAME ASSEMBLY - Front seat, bottom left	1	
	99727-12	M,N	* CUSHION AND FRAME ASSEMBLY - Front seat, bottom left	1	
	96806-10	M,Q,R	* CUSHION AND FRAME ASSEMBLY - Front seat, left	1	
	79337-25	M,S	* CUSHION AND FRAME ASSEMBLY - Front seat, bottom left	1	
	79337-39	BQ,BR	* CUSHION AND FRAME ASSEMBLY - Front seat, bottom left (luxurious)	1	
	69085-03	B,P	* CUSHION AND FRAME ASSEMBLY - Front seat, bottom right	1	
	66552-03	C,E	* CUSHION AND FRAME ASSEMBLY - Front seat, bottom right	1	
	69408-03	D,G	* CUSHION AND FRAME ASSEMBLY - Front seat, bottom right	1	
	69408-08	H,K	* CUSHION AND FRAME ASSEMBLY - Front seat, bottom right	1	
	99384-13	H,L	* CUSHION AND FRAME ASSEMBLY - Front seat, bottom right	1	
	99727-13	M,N	* CUSHION AND FRAME ASSEMBLY - Front seat, bottom right	1	
	96806-11	M,Q,R	* CUSHION AND FRAME ASSEMBLY - Front seat, right	1	
	79337-26	M,S	* CUSHION AND FRAME ASSEMBLY - Front seat, bottom right	1	
	79337-40	BQ, BR	* CUSHION AND FRAME ASSEMBLY - Front seat, bottom right (luxurious)	1	

When ordering, always specify Part Number, Description, and Serial Number of Aircraft

PIPER PARTS CATALOG

Figure and Index Number	Part Number	Code	NOMENCLATURE	No. Req	SERIAL NUMBERS AFFECTED
29-2a	68069-00		* * FRAME ASSEMBLY - Front seat, bottom	1	32-1 to 32-875 inclusive
	69533-00	BA	* * FRAME ASSEMBLY - Front seat, bottom, left	1	
	69633-01	B,C	* * FRAME ASSEMBLY - Front seat, bottom, right	1	
	99077-04	L	* * FRAME ASSEMBLY - Front seat, bottom, left	1	
	99077-05	L	* * FRAME ASSEMBLY - Front seat, bottom, right	1	
	99077-08	N	* * FRAME ASSEMBLY - Front seat, bottom, left	1	
	99077-09	N	* * FRAME ASSEMBLY - Front seat, bottom, right	1	
	96765-00	Q,R	* * FRAME ASSEMBLY - Front seat, bottom, left	1	
	96765-01	Q,R	* * FRAME ASSEMBLY - Front seat, bottom, right	1	
	79818-02	S	* * FRAME ASSEMBLY - Front seat, bottom, left	1	
	79818-03	S	* * FRAME ASSEMBLY - Front seat, bottom, right	1	
3	87332-02	BS	* * * ROLLER - Seat track	2	
-4	95061-106		* * * BUSHING - Seat roller	2	
-5	401 316	W	* * * BOLT - (AN4-20A)	4	
	62833-78		* * * WASHER - Seat roller	8	
	477 708		* * * NUT - (26C-048) Aft	2	
	477 708	BG	* * * NUT - (26C-048) Front	2	
	404 888	W,BH	* * * NUT - (MS20365-428C) Front	2	
-6	69501-00	X	* * * HANDLE - Front seat adjustment, left	1	
	69501-02	N	* * * HANDLE - Front seat adjustment, left	1	
	69501-01	X	* * * HANDLE - Front seat adjustment, right	1	
	69501-03	N	* * * HANDLE - Front seat adjustment, right	1	
-6a	571 149	Q	* * * KNOB - "T", front seat adjustment (PS10087-1-1)	1	
	79207-00	O	* * * HANDLE - "U", front seat adjustment	1	
-7	76175-02	Y	* * * PLUNGER - Seat	2	
	76175-03	O	* * * PLUNGER - Seat	2	
-8	96102-58	W,Y	* * * BUSHING - Seat plunger	2	
	96765-07	O	* * * BUSHING - Seat plunger	2	
-9	50111-00	W,X	* * * SPRING - Seat plunger	2	
	89724-00	N	* * * SPRING - Seat plunger	2	
	587 299	O	* * * SPRING - Seat plunger (LC-038F-6SS)	2	
-10	407 565	W	* * * WASHER - (AN960-416)	2	
-11	79252-00	BG	* * * BUSHING - Seat roller	4	
	86061-161	BH	* * * BUSHING - Seat roller	4	
-12	452 366		* * * BEARING - (NAS506-4)	2	
-13	480 732	U,W	* * * PIN - Roll (69-040-187-0837)	2	
-14	424 187	W,Y	* * * PIN - Flat head (MS20392-2C37)	2	
	424 061	W,Y	* * * COTTER PIN - (MS24665-132)	2	
	407 564	W,Y	* * * WASHER - (AN960-10)	8	
-14a	19336-00	U,W	* * * SPRING - Seat back adjustment, inboard	1	
	19336-01	U,W	* * * SPRING - Seat back adjustment, outboard	1	
-14b	26453-05	W,Z	* * * TUBE ASSEMBLY - Reclining mechanism	1	
	19392-15	Q,R,W	* * * TUBE ASSEMBLY - Reclining mechanism, left	1	
	19392-16	Q,R,W	* * * TUBE ASSEMBLY - Reclining mechanism, right (17 43 L)	1	
	79230-00	Q	* * * TUBE ASSEMBLY - Reclining mechanism, right (17 10 L)	1	
	79230-00	S	* * * TUBE ASSEMBLY - Reclining mechanism, right (17 10 L)	1	
-14c	19365-02	U,W	* * * CAM - Reclining seat	2	
-14d	32380-00	U,W	* * * HANDLE - Seat back adjustment, cadmium plated	1	
	79442-00	U	* * * HANDLE - Seat back adjustment, black	1	
-14e	480 701	U,W	* * * PIN - Roll (69-028-125-0825)	3	
-15	463 706	V	* * * BUMPER - Rubber (9102J)	2	
-15a	96611-00	Q,T	* * * TUBE ASSEMBLY - Seat release, left	1	
	96611-01	Q,T	* * * TUBE ASSEMBLY - Seat release, right	1	
-15b	79251-00		* * * WASHER - Teflon	8	

When ordering, always specify Part Number, Description and Serial Number of Aircraft

PIPER PARTS CATALOG

Figure and Index Number	Part Number	Code	NOMENCLATURE	No. Req.	SERIAL NUMBERS AFFECTED
29-16	68061-03	P	* CUSHION AND FRAME ASSEMBLY - Front seat, back	1	32-1 to 32-875 inclusive
	69085-02	B,P	* CUSHION AND FRAME ASSEMBLY - Front seat, back	1	
	66552-02	C,E	* CUSHION AND FRAME ASSEMBLY - Front seat, back	1	
	69408-02	D,G	* CUSHION AND FRAME ASSEMBLY - Front seat, back	1	
	69408-07	H,K	* CUSHION AND FRAME ASSEMBLY - Front seat, back	1	
	99384-07	H,L	* CUSHION AND FRAME ASSEMBLY - Front seat, back	1	
	99727-23	M,N	* CUSHION AND FRAME ASSEMBLY - Front seat, back, left	1	
	96806-12	M,Q,R	* CUSHION AND FRAME ASSEMBLY - Front seat, back, left	1	
	79337-16	M,S	* CUSHION AND FRAME ASSEMBLY - Front seat, back, left	1	
	79337-27	BQ, BR	* CUSHION AND FRAME ASSEMBLY - Front seat, back, left (luxurious)	1	
	99727-15	M,N	* CUSHION AND FRAME ASSEMBLY - Front seat, back, right	1	
	96806-24	M, AA	* CUSHION AND FRAME ASSEMBLY - Front seat, back, right	1	
	96806-02	M,R,AB	* CUSHION AND FRAME ASSEMBLY - Front seat, back, right	1	
	79337-17	M,S	* CUSHION AND FRAME ASSEMBLY - Front seat, back, right	1	
	79337-28	BQ, BR	* CUSHION AND FRAME ASSEMBLY - Front seat, back, right (luxurious)	1	
-16a	68067-00	BB	* * FRAME ASSEMBLY - Front seat, back	1	
	65879-00	BC	* * FRAME ASSEMBLY - Front seat, back	1	
	99093-00	L	* * FRAME ASSEMBLY - Front seat, back	1	
	99093-00	N	* * FRAME ASSEMBLY - Front seat, back	1	
	99093-07	N	* * FRAME ASSEMBLY - Front seat, back, right	1	
	96810-02	Q,R	* * FRAME ASSEMBLY - Front seat, back, left	1	
	96810-03	R,BD	* * FRAME ASSEMBLY - Front seat, back, right	1	
	79555-00	S	* * FRAME ASSEMBLY - Front seat, back, left	1	
	7955-01	S	* * FRAME ASSEMBLY - Front seat, back, right	1	
-16b	99681-00	N	* * * HANDLE - Seat release, inboard, red	1	
	99681-02	N	* * * HANDLE - Seat release, inboard, blue/green	1	
	99681-04	N	* * * HANDLE - Seat release, inboard, tan	1	
	99681-06	N	* * * HANDLE - Seat release, inboard, black	1	
	99681-08	N	* * * HANDLE - Seat release, inboard, white	1	
	99681-10	N	* * * HANDLE - Seat release, inboard, green	1	
	99681-01	N	* * * HANDLE - Seat release, outboard, red	1	
	99681-03	N	* * * HANDLE - Seat release, outboard, blue/green	1	
	99681-05	N	* * * HANDLE - Seat release, outboard, tan	1	
	99681-07	N	* * * HANDLE - Seat release, outboard, black	1	
	99681-09	N	* * * HANDLE - Seat release, outboard, white	1	
	99681-11	N	* * * HANDLE - Seat release, outboard, green	1	
-16c	99721-02	N	* * * HANDLE - Seat release, inboard	1	
	99721-03	N	* * * HANDLE - Seat release, outboard	1	
	96815-00	AA,AF	* * * HANDLE - Horizontally installed with up and down release	2	
	79228-00	AB	* * * HANDLE - Vertically installed with left and right release	2	
-16d	453 732	S,W	* * * BUSHING - Seat back, right (PS10064-375-4)	1	
-16e	78041-03	AA,AP	* * COVER ASSEMBLY - Seat back, right	1	
	78041-08	R,AB	* * COVER ASSEMBLY - Seat back, right	1	
	78041-00	S,BJ	* * COVER ASSEMBLY - Seat back, right	1	
	78041-09	BQ, BR	* * COVER ASSEMBLY - Seat back, right, (luxurious)	1	
-16f	69669-13	AD	* * * PLACARD - Seat back release, left	1	
	69669-14	AD	* * * PLACARD - Seat back release, right	1	

PIPER PARTS CATALOG

Figure and Index Number	Part Number	Code	NOMENCLATURE	No. Req.	SERIAL NUMBERS AFFECTED
29-16g	99678-00	N	* * COVER - Seat release, inboard, red	1	
	99678-02	N	* * COVER - Seat release, inboard, blue/green	1	
	99678-04	N	* * COVER - Seat release, inboard, tan	1	
	99678-06	N	* * COVER - Seat release, inboard, black	1	
	99678-08	N	* * COVER - Seat release, inboard, white	1	
	99678-10	N	* * COVER - Seat release, inboard, green	1	
	99678-01	N	* * COVER - Seat release, outboard, red	1	
	99678-03	N	* * COVER - Seat release, outboard, blue/green	1	
	99678-05	N	* * COVER - Seat release, outboard, tan	1	
	99678-07	N	* * COVER - Seat release, outboard, black	1	
	99678-09	N	* * COVER - Seat release, outboard, white	1	
	99678-11	N	* * COVER - Seat release, outboard, green	1	
-16h	79554-02	S	* KNOB - Seat back release, right	1	
-16j	99718-01	AE	* STOP ASSEMBLY - Seat latch	1	
	99718-05	AC	* STOP ASSEMBLY - Seat latch	1	
-16k	78041-00	O, BJ	* COVER ASSEMBLY - Seat back, left	1	
	78041-09	BQ, BR	* COVER ASSEMBLY - Seat back, left (luxurious)	1	
-17	68086-00	P,AG,BT	SEAT ASSEMBLY - Center, forward facing	2	
	66553-00	C,E,BT	SEAT ASSEMBLY - Center, forward facing	2	
	69410-02	D,G,BT	SEAT ASSEMBLY - Center, forward facing	2	
	69410-07	H,K,BT	SEAT ASSEMBLY - Center, forward facing	2	
	99385-01	H,L,BT	SEAT ASSEMBLY - Center, left, forward facing	1	
	99385-00	H,L,BT	SEAT ASSEMBLY - Center, right, forward facing	1	
	99730-01	M,N,BT	SEAT ASSEMBLY - Center, left, forward facing	1	
	99730-00	M,N,BT	SEAT ASSEMBLY - Center, right, forward facing	1	
	96827-02	M,AH,BT	SEAT ASSEMBLY - Center, left, forward facing	1	
	96827-03	M,AH,BT	SEAT ASSEMBLY - Center, right, forward facing	1	
	96827-13	M,AJ,BL,BT	SEAT ASSEMBLY - Center, left, forward facing	1	
	96827-14	M,AJ,BL,BT	SEAT ASSEMBLY - Center, right, forward facing	1	
	96827-24	M,BL,BO,BT	SEAT ASSEMBLY - Center, left, forward facing	1	
	96827-25	M,BL,BO,BT	SEAT ASSEMBLY - Center, right, forward facing	1	
	96827-33	BQ,BR,BT	SEAT ASSEMBLY - Center, left, forward facing (luxurious)	1	
	96827-34	BQ,BR,BT	SEAT ASSEMBLY - Center, right, forward facing (luxurious)	1	
-18	68086-02	P,AG	* CUSHION AND FRAME ASSEMBLY - Center seat, bottom	1	
	66553-02	C,E	* CUSHION AND FRAME ASSEMBLY - Center seat, bottom	1	
	69410-05	D,G	* CUSHION AND FRAME ASSEMBLY - Center seat, bottom	1	
	69410-10	H,K	* CUSHION AND FRAME ASSEMBLY - Center seat, bottom	1	
	99385-08	H,L	* CUSHION AND FRAME ASSEMBLY - Center, bottom, left	1	
	99385-07	H,L	* CUSHION AND FRAME ASSEMBLY - Center, bottom, right	1	
	99730-08	M,N	* CUSHION AND FRAME ASSEMBLY - Center, bottom, left	1	
	99730-07	M,N	* CUSHION AND FRAME ASSEMBLY - Center, bottom, right	1	
	96827-06	M,AH	* CUSHION AND FRAME ASSEMBLY - Center, bottom, left,	1	
	96827-07	M,AH	* CUSHION AND FRAME ASSEMBLY - Center, bottom, right	1	
	96827-17	M,AJ	* CUSHION AND FRAME ASSEMBLY - Center, bottom, left	1	
	96827-18	M,AJ	* CUSHION AND FRAME ASSEMBLY - Center, bottom, right	1	

When ordering, always specify Part Number, Description, and Serial Number of Aircraft

PIPER PARTS CATALOG

Figure and Index Number	Part Number	Code	NOMENCLATURE	No. Req.	SERIAL NUMBERS AFFECTED
29-18	96827-26	M,BO	* CUSHION AND FRAME ASSEMBLY - Center, bottom, left	1	
	96827-27	M,BO	* CUSHION AND FRAME ASSEMBLY - Center, bottom, right	1	
	96827-31	BQ,BR	* CUSHION AND FRAME ASSEMBLY - Center, bottom, left (luxurious)	1	
-18	96827-32	BQ,BR	* CUSHION AND FRAME ASSEMBLY - Center, bottom, right (luxurious)	1	
-18a	68088-00	F	* * FRAME ASSEMBLY - Center seat, bottom	1	
	68095-00	BC	* * FRAME ASSEMBLY - Center seat, bottom	1	
	99077-00	BP	* * FRAME ASSEMBLY - Center seat, bottom, left	1	
	99077-01	BP	* * FRAME ASSEMBLY - Center seat, bottom, right	1	
	99077-16	BO	* * FRAME ASSEMBLY - Center seat, bottom, left	1	
	99077-17	BO	* * FRAME ASSEMBLY - Center seat, bottom, right (outboard)	1	
-19	32380-00	U	* * * HANDLE - Seat back adjustment, cadmium plated	1	
	79442-00	U	* * * HANDLE - Seat back adjustment, black	1	
-20	68068-00	AK	* * * FOOT - Seat attachment, rear	2	
	79436-00	AJ	* * * FOOT - Seat attachment, rear	2	
-21	453 706	V	* * * BUMPER - Rubber (9102J)	2	
-21a	19336-00	U	* * * SPRING - Seat back adjustment, inboard	1	
	19336-01	U	* * * SPRING - Seat back adjustment, outboard	1	
-21b	26453-05	U	* * * TUBE ASSEMBLY - Reclining mechanism	1	
-21c	19365-02	U	* * * * CAM - Reclining seat	2	
-21d	480 702	U	* * * PIN - Roll (59-028-125-0625)	3	
-22	68068-03	P,AG	* CUSHION AND FRAME ASSEMBLY - Center seat, back	1	
	66553-03	C,E	* CUSHION AND FRAME ASSEMBLY - Center seat, back	1	
	69410-04	D,G	* CUSHION AND FRAME ASSEMBLY - Center seat, back	1	
	69410-09	H,K	* CUSHION AND FRAME ASSEMBLY - Center seat, back	1	
	99385-04	H,L	* CUSHION AND FRAME ASSEMBLY - Center seat, back	1	
	99730-04	H,N	* CUSHION AND FRAME ASSEMBLY - Center seat, back	1	
	79337-16	M,O	* CUSHION AND FRAME ASSEMBLY - Center seat, back	1	
	79337-27	BQ,BR	* CUSHION AND FRAME ASSEMBLY - Center seat, back (luxurious)	1	
-22a	68067-00	F	* * FRAME ASSEMBLY - Center seat, back	1	
	65879-00	BC	* * FRAME ASSEMBLY - Center seat, back	1	
	99093-00	Z	* * FRAME ASSEMBLY - Center seat, back	1	
	96810-02	O,AM	* * FRAME ASSEMBLY - Center seat, back	1	
	79555-00	O,AR	* * FRAME ASSEMBLY - Center seat, back	1	
-22b	78041-00	O,BJ	* COVER ASSEMBLY - Seat back	1	
	78041-09	BQ,BR	* COVER ASSEMBLY - Seat back (luxurious)	1	
-22c	67958-02	BQ, BR	* BUTTON ASSEMBLY - Seat back	3	
-23	68069-00	P,AG	SEAT ASSEMBLY - Rear	2	
	66554-00	C,E	SEAT ASSEMBLY - Rear	2	
	69410-03	D,G	SEAT ASSEMBLY - Rear	2	
	69410-08	H,K	SEAT ASSEMBLY - Rear	2	
	99385-02	H,L	SEAT ASSEMBLY - Rear, left	1	
	99385-03	H,L	SEAT ASSEMBLY - Rear, right	1	
	99730-02	M,N	SEAT ASSEMBLY - Rear, left	1	
	99730-03	M,N	SEAT ASSEMBLY - Rear, right	1	
	96827-04	M,AH	SEAT ASSEMBLY - Rear, left	1	
	96827-05	M,AH	SEAT ASSEMBLY - Rear, right	1	
	96827-15	M,BK	SEAT ASSEMBLY - Rear, left	1	
	96827-16	M,BK	SEAT ASSEMBLY - Rear, right	1	
	79479-02	M,BF	SEAT ASSEMBLY - Rear, left	1	
	79479-07	M,BF	SEAT ASSEMBLY - Rear, right	1	
	79479-12	BQ,BR	SEAT ASSEMBLY - Rear, left (luxurious)	1	
	79479-14	BQ, BR	SEAT ASSEMBLY - Rear, right (luxurious)	1	
-24	68069-02	P, AG	* CUSHION AND FRAME ASSEMBLY - Rear seat, bottom	1	
	66554-02	C,E	* CUSHION AND FRAME ASSEMBLY - Rear seat, bottom	1	
	69410-06	D,G	* CUSHION AND FRAME ASSEMBLY - Rear seat, bottom	1	
	69410-11	H,K	* CUSHION AND FRAME ASSEMBLY - Rear seat, bottom	1	

When ordering, always specify Part Number, Description, and Serial Number of Aircraft

PIPER PARTS CATALOG

Figure and Index Number	Part Number	Code	NOMENCLATURE	No. Req.	SERIAL NUMBERS AFFECTED
29-24	99385-05	H,L	* CUSHION AND FRAME ASSEMBLY - Rear seat, bottom, left	1	
	99385-06	H,L	* CUSHION AND FRAME ASSEMBLY - Rear seat, bottom, right	1	
	99730-05	M,N	* CUSHION AND FRAME ASSEMBLY - Rear seat, bottom, left	1	
	99730-06	M,N	* CUSHION AND FRAME ASSEMBLY - Rear seat, bottom, right	1	
	96827-08	M,AH	* CUSHION AND FRAME ASSEMBLY - Rear seat, bottom, left	1	
	96827-09	M,AH	* CUSHION AND FRAME ASSEMBLY - Rear seat, bottom, right	1	
	96827-19	M,BK	* CUSHION AND FRAME ASSEMBLY - Rear seat, bottom, left	1	
	96827-20	M,BK	* CUSHION AND FRAME ASSEMBLY - Rear seat, bottom, right	1	
	79479-08	M,BF	* CUSHION AND FRAME ASSEMBLY - Rear seat, bottom, left	1	
	79479-11	M,BF	* CUSHION AND FRAME ASSEMBLY - Rear seat, bottom, right	1	
	79479-15	BQ,BR	* CUSHION AND FRAME ASSEMBLY - Rear seat, bottom, left (luxurious)	1	
	79479-17	BQ,BR	* CUSHION AND FRAME ASSEMBLY - Rear seat, bottom, right (luxurious)	1	
-24a	68071-00	F	* * FRAME ASSEMBLY - Rear seat, bottom	1	
	68072-00	BC	* * FRAME ASSEMBLY - Rear seat, bottom	1	
	99077-02	BE	* * FRAME ASSEMBLY - Rear seat, bottom, left	1	
	99077-03	BE	* * FRAME ASSEMBLY - Rear seat, bottom, right	1	
	79633-02	BF	* * FRAME ASSEMBLY - Rear seat, bottom, left	1	
	79633-15	BF	* * FRAME ASSEMBLY - Rear seat, bottom, right	1	
-25	32380-00	U	* * * HANDLE - Seat back adjustment	1	
	79442-00	U	* * * HANDLE - Seat back adjustment	1	
-26	68068-00	AK	* * * FOOT - Seat attachment, rear	2	
	79436-00	BK	* * * FOOT - Seat attachment, rear	2	
-27	453 706	V	* * * BUMPER - Rubber (9102J)	2	
-27a	19336-00	U	* * * SPRING - Seat back adjustment, inboard	1	
	19336-01	U	* * * SPRING - Seat back adjustment, outboard	1	
-27b	26453-05	U	* * * TUBE ASSEMBLY - Reclining mechanism	1	
-27c	19365-02	U	* * * * CAM - Reclining seat	2	
-27d	480 701	U	* * * PIN - Roll (59-028-1 25-0625)	3	
-28	68069-03	P,AG	* CUSHION AND FRAME ASSEMBLY - Rear seat, back	1	
	66554-03	C,E	* CUSHION AND FRAME ASSEMBLY - Rear seat, back	1	
	69410-04	D,G	* CUSHION AND FRAME ASSEMBLY - Rear seat, back	1	
	69410-09	H,K	* CUSHION AND FRAME ASSEMBLY - Rear seat, back	1	
	99385-04	H,L	* CUSHION AND FRAME ASSEMBLY - Rear seat, back	1	
	99730-04	M,N	* CUSHION AND FRAME ASSEMBLY - Rear seat, back	1	
	79337-16	M,O	* CUSHION AND FRAME ASSEMBLY - Rear seat, back	1	
	79337-27	BQ,BR	* CUSHION AND FRAME ASSEMBLY - Rear seat, back (luxurious)	1	
-28a	68067-00	F	* * FRAME ASSEMBLY - Rear seat, back	1	
	65879-00	BC	* * FRAME ASSEMBLY - Rear seat, back	1	
	99093-00	Z	* * FRAME ASSEMBLY - Rear seat, back	1	
	96810-02	O,AM	* * FRAME ASSEMBLY - Rear seat, back	1	
	79555-00	O,AR	* * FRAME ASSEMBLY - Rear seat, back	1	
-28b	78041-02	O,BJ	* COVER ASSEMBLY - Seat back	1	
	78041-10	BQ,BR	* COVER ASSEMBLY - Seat back (luxurious)	1	
-28c	67958-02	BQ,BR	* BUTTON ASSEMBLY - Seat back	3	
-28d	79749-03	BF,AV	ARMREST ASSEMBLY - Rear seat, right	1	
-28e	79749-07	BF,AW	* SUPPORT ASSEMBLY - Armrest, forward	1	
-28f	79749-08	BF,AW	* SUPPORT ASSEMBLY - Armrest, rear	1	
-29	551 392	BX	BELT ASSEMBLY - Safety, rear (PS50039-4-4A) black	2	
-30	551 391	BL,BX	BELT ASSEMBLY, Safety, center (PS50039-4-3A) black	2	
-31	551 368	X,AP,BX	BELT ASSEMBLY, Safety, forward (0108168-11) black	2	
	551 390	BX	BELT ASSEMBLY, Safety, forward (PS50039-4-2A) black	2	
-32	63900-53	X	BUSHING - Seat belt attachment	8	
-33	63900-144		BUSHING - Seat belt attachment	2	
-34	20868-00	X,AL	CABLE ASSEMBLY - Safety belt attachment	2	
-35	400 441		BOLT - (AN3-7A)	4	

When ordering, always specify Part Number, Description, and Serial Number of Aircraft

PIPER PARTS CATALOG

Figure and Index Number	Part Number	Code	NOMENCLATURE	No. Req.	SERIAL NUMBERS AFFECTED
29-36	401 266	X	BOLT - (AN3-5A)	2	
	400 441	AQ	BOLT - (AN3-7A)	2	
	407 800	X	WASHER - (AN970-3)	2	
	407 564	AQ	WASHER - (AN960-10)	2	
	404 887		NUT - (MS20365-1032C)	2	
-37	400 440	X	BOLT - (AN3-6A)	4	
	404 887	X	NUT - (MS20365-1032C)	4	
-38	68022-14	BL	BOOT - Seat belt attachment, black	2	
-39	62557-04		TRACK - Front seat	4	
-40	62654-00	BW	STOP - Seat track, front	8	
-41	62655-00	BW	STOP - Seat track, rear (1.62L)	4	
	62654-00	BW	STOP - Seat track, rear (1.20 L)	4	
	62654-03	BF,BN	STOP - Seat track, rear (3.65 L)	4	
-42	14843-51	X	BUSHING - Seat belt attachment	4	
-43	65764-02	F,AS	COVER - Inertia reel, 7 1/8" x 7," left, red	1	
	69598-02	F	COVER - Inertia reel, 9 1/2" x 8," left, red	1	
	69432-02	G,AT	COVER - Inertia reel, 8 1/8" x 7," left, red	1	
	69440-02	AN	COVER - Inertia reel, 12 1/2" x 6," left, red	1	
	65764-04	F,AS	COVER - Inertia reel, 7 1/8" x 7," left, blue	1	
	69598-04	F	COVER - Inertia reel, 9 1/2" x 8," left, blue	1	
	69432-03	G,AT	COVER - Inertia reel, 8 1/8" x 7," left, blue	1	
	69440-04	K	COVER - Inertia reel, 12 1/2" x 6," left, blue	1	
	69440-14	L	COVER - Inertia reel, 12 1/2" x 6," left, blue/green	1	
	65764-06	F,AS	COVER - Inertia reel, 7 1/8" x 7," left, brown	1	
	69598-06	F	COVER - Inertia reel, 9 1/2" x 8," left, brown	1	
	69432-04	G,AT	COVER - Inertia reel, 8 1/8" x 7," left, brown	1	
	65764-08	AS,AU	COVER - Inertia reel, 7 1/8" x 7," left, tan	1	
	69432-05	G,AT	COVER - Inertia reel, 8 1/8" x 7," left, tan	1	
	69440-06	AN	COVER - Inertia reel, 12 1/2" x6," left, tan	1	
	69432-06	G,AT	COVER - Inertia reel, 8 1/8" x 7," left, black	1	
	69440-10	AN	COVER - Inertia reel, 12 1/2" x 6," left, black	1	
	69440-08	AN	COVER - Inertia reel, 12 1/2" x 6," left, green	1	
	69440-12	AN	COVER - Inertia reel, 12 1/2" x 6," left, white	1	
	65764-03	AS,AT, AX	COVER - Inertia reel, 7 1/8" x 7," right, red	1	
	69598-03	F	COVER - Inertia reel, 9 1/2" x 8," right, red	1	
	69440-03	AN	COVER - Inertia reel, 12 1/2" x 6," right, red	1	
	65764-05	AS,AT, AX	COVER - Inertia reel, 7 1/8" x 7," right, blue	1	
	69598-05	F	COVER - Inertia reel, 9 1/2" x 8," right, blue	1	
	69440-05	K	COVER - Inertia reel, 12 1/2" x 6," right, blue	1	
	69440-15	L	COVER - Inertia reel, 12 1/2" x 6," right, blue/green	1	

Figure and Index Number	Part Number	Code	NOMENCLATURE	No. Req.	SERIAL NUMBERS AFFECTED
28-43	65764-07	AM,AR, AX	COVER - Inertia reel, 7 1/8" x 7", right, brown	1	
	69598-07	F	COVER - Inertia reel, 8 1/2" x 8", right, brown	1	
	65764-09	AM,AR, AX	COVER - Inertia reel, 7 1/8 x 7", right, tan	1	
	69440-07	AN	COVER - Inertia reel, 12 1/2" x 6", right, tan	1	
	65764-11	G	COVER - Inertia reel, 7 1/8" x 7", right, black	1	
	69440-11	AN	COVER - Inertia reel, 12 1/2" x 6", right, black	1	
	69440-09	AN	COVER - Inertia reel, 12 1/2" x 6", right, green	1	
	69440 13	AN	COVER - Inertia reel, 12 1/2" x 6", right, white	1	
-44	65763-00	AX	BRACKET - Shoulder belt support, left	1	
	66940-00	AN	DOUBLER - Shoulder belt support, left	1	
	65763-01	AX	BRACKET Shoulder belt support, right	1	
	66940-01	AN	BRACKET - Shoulder belt support, right	1	
45	484 224	X,AY	BELT ASSEMBLY - Shoulder (01071 16-B) black	2	
-46	99255-00	H,L	HEADREST ASSEMBLY	6	
	99255-03	M,N	HEADREST ASSEMBLY	6	
	96806-17	M,Q,AM	HEADREST ASSEMBLY	5	
	96906 26	M,Q,AM	HEADREST ASSEMBLY - Co-pilot seat	1	
	79337-19	M,S,AR	HEADREST ASSEMBLY - Front seat (8" high)	2	
	79764-02	M,BF,AR	HEADREST ASSEMBLY - Front seat (10" high)	2	
	79337-18	M,S,AR	HEADREST ASSEMBLY - Center and rear seat (8" high)	4	
	79764-02	M,BF,AR	HEADREST ASSEMBLY - Center and rear seat (10" high)	4	
	79337-41	BQ,BR	HEADREST ASSEMBLY Front, center and rear seats (8" high) luxurious	6	
	79764-04	BQ,BR	HEADREST ASSEMBLY - Front, center and rear seats (10" high) luxurious	6	
-47	99361-00	W,Z	RECEPTACLE - Headrest	12	
	78044-00	Q	RECEPTACLE - Headrest	6	
48	462 682	AZ	BELT ASSEMBLY - Shoulder, front (PS50039-4-21)	2	
	462 679	AZ	BELT ASSEMBLY - Shoulder, center (PS50039-4-19)	2	
	551 386	AQ	BELT ASSEMBLY - Shoulder, rear (PS50039-4-19)	2	
	462 679	BF	BELT ASSEMBLY - Shoulder, rear (PS50039-4-19)	2	
-49	63900-145	AQ	BUSHING - Seat belt attachment	8	
-50	63900-146	AQ,BL	BUSHING - Seat belt attachment	2	
51	63900-147	AQ	BUSHING - Seat belt attachment	2	
-52	63900-149	AQ,BL	BUSHING - Seat belt attachment	2	
-53	96908-00	AQ,BL	CABLE ASSEMBLY - Safety belt	2	
-54	400 441	W,X	BOLT - (AN3-7A)	2	
	400 004	W,AQ,BL	BOLT - (AN4-7A)	2	
	407 565	W,AQ,BL	WASHER (AN960-416)	2	
-55	400 441	W,AQ	BOLT - (AN3-7A)	2	
	407 564	W,AQ	WASHER - (AN960-10)	2	
-56	400 441	W,X	BOLT - (AN3-7A)	2	
	400 440	W,AQ	BOLT - (AN3-6A)	2	
	407 564	W,AQ	WASHER - (AN960-10)	2	
-57	95061-90	AQ,BL	BUSHING	2	
-58	401 194	W,AQ,BL	BOLT - (AN5-16A)	2	
	407 566	W,AQ,BL	WASHER - (AN960-516)	2	
	404 889	W,AQ,BL	NUT - (MS20365-524C)	2	
-59	401 197	W,AQ,BL	BOLT - (AN5-7A)	2	
	407 566	W,AQ,BL	WASHER - (AN960-516)	2	
	404 837	W,AQ,BL	NUT - (MS20364-524C)	2	
-60	69669-110	BM	PLACARD - Seat release	4	
-61	75178-02	BF,BN	CLIP - Seat	2	

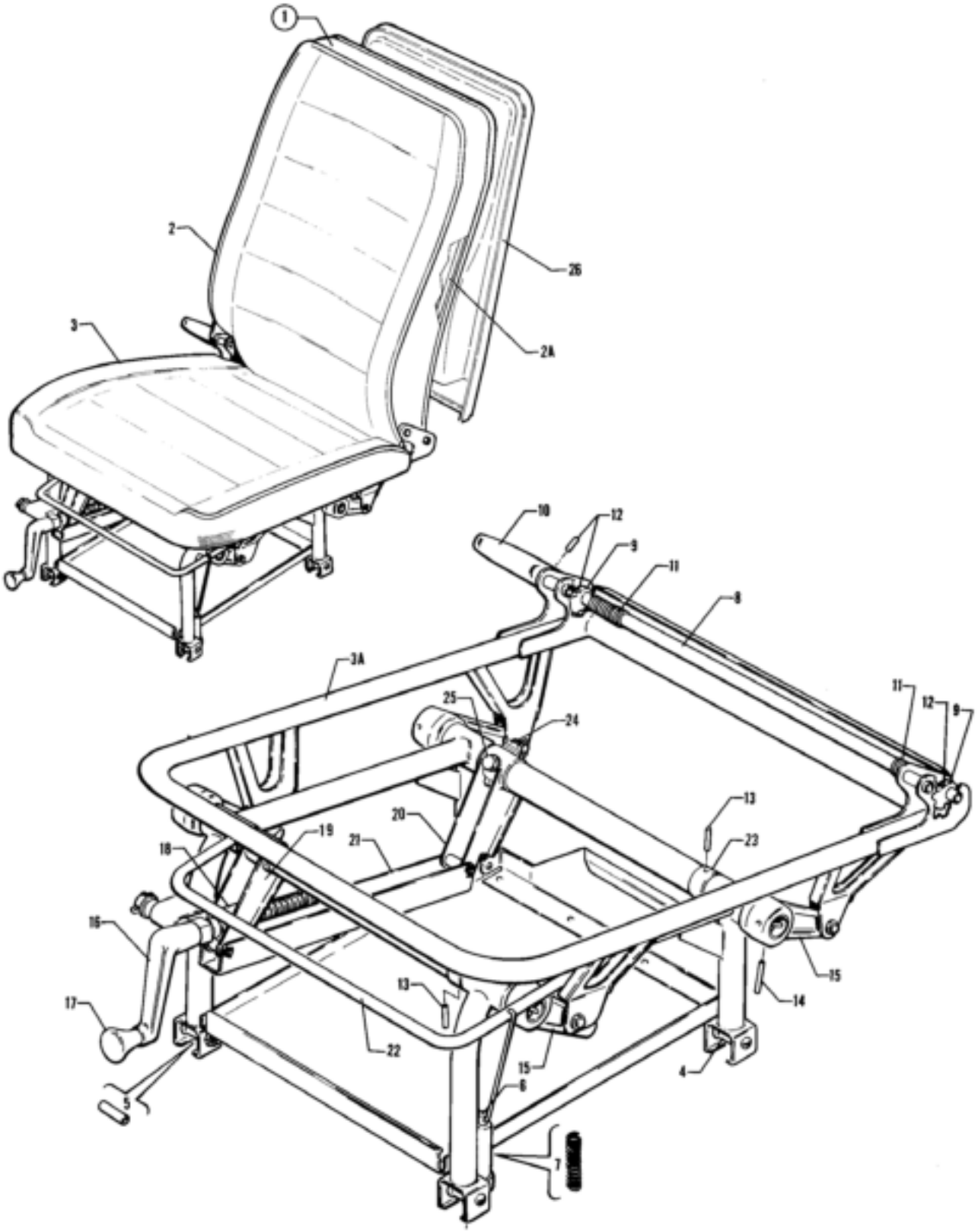

Figure 30. Vertically Adjustable Front Seat Assembly
(PA-32-260 - Serial Nos. 32-1251 to 32-7300076 inclusive)
(PA-32-300 - Serial Nos. 32-40851 to 32-7340201 inclusive)

CODE EXPLANATIONS FOR FIGURE 30

A - Used on PA-32-260 with serial numbers 32-1251 to 32-7300076 incl., and PA-32-300 with serial numbers 32-40851 to 32-7340201 incl.
B - When ordering, specify color red, blue, beige, black, green or white.
C - Used on PA-32-260 with serial numbers 32-1251 to 32-1320 incl., and PA-32-300 with serial numbers 32-40851 to 32-41018 incl.
D - Used on PA-32-260 with serial numbers 32-7100001 to 32-7100038 incl., and PA-32-300 with serial numbers 32-7140001 to 32-7140086 incl.
E - Used on PA-32-260 with serial numbers 32-7200001 to 32-7200055 incl., and PA-32-300 with serial numbers 32-7240001 to 32-7240147 incl.
F - When ordering, specify color red, blue/green, gold, black white or green.
G - Used on PA-32-260 with serial numbers 32-7300001 to 32-7300076 incl., and PA-32-300 with serial numbers 32-7340001 to 32-7340201
H - Used on PA-32-260 with serial numbers 32-7100001 to 32-7200055 incl, and PA-32-300 with serial numbers 32-7140001 to 32-7240147 incl.
J - Used on PA-32-260 with serial numbers 32-7100001 to 32-7300076 incl., and PA-32-300 with serial numbers 32-7140001 to 32-7340201
K - Before ordering, ascertain O.D. at center of seat roller. If O.D. of roller measures .42, (2) rollers P/N 18968-00 must be ordered. If O.D. of roller measures .62, order roller 87332-02 as required.
L - Reference latest revision to Piper Service Bulletin 337. Order kit No. 760-532 to replace the aluminum rear main support tube with a steel tube.

PIPER PARTS CATALOG

Figure and Index Number	Part Number	Code	NOMENCLATURE	No. Req.	SERIAL NUMBERS AFFECTED
30-1	66984-00	B,C	SEAT ASSEMBLY - Adjustable front, left	1	
	99353-04	B,D	SEAT ASSEMBLY - Adjustable front, left	1	
	99353-16	E,F	SEAT ASSEMBLY - Adjustable front, left	1	
	69568-02	F,G	SEAT ASSEMBLY - Adjustable front, left	1	
	66984-01	B,C	SEAT ASSEMBLY - Adjustable front, right	1	
	99353-05	B,D	SEAT ASSEMBLY - Adjustable front, right	1	
	99353-17	E,F	SEAT ASSEMBLY - Adjustable front, right	1	
	69568-03	F,G	SEAT ASSEMBLY - Adjustable front, right	1	
-2	66984-04	B,C	* CUSHION ASSEMBLY - Back	1	
	99353-07	B,D	* CUSHION ASSEMBLY - Back	1	
	99353-18	E,F	* CUSHION ASSEMBLY - Back	1	
	96806-12	F,G	* CUSHION ASSEMBLY - Back	1	
-2a	66992-00	C	* * FRAME ASSEMBLY - Back	1	
	99093-00	H	* * FRAME ASSEMBLY - Back	1	
	96810-02	G	* * FRAME ASSEMBLY - Back	1	
-3	66984-06	B,C	* CUSHION ASSEMBLY - Bottom, left	1	
	99353-12	B,D	* CUSHION ASSEMBLY - Bottom, left	1	
	99353-21	E,F	* CUSHION ASSEMBLY - Bottom, left	1	
	69568-06	F,G	* CUSHION ASSEMBLY - Bottom, left	1	
	66984-07	B,C	* CUSHION ASSEMBLY - Bottom,right	1	
	99353-13	B,D	* CUSHION ASSEMBLY - Bottom,right	1	
	99353-22	E,F	* CUSHION ASSEMBLY - Bottom,right	1	
	69568-07	F,G	* CUSHION ASSEMBLY - Bottom,right	1	
-3a	99305-08	C	* * FRAME ASSEMBLY - Bottom, left	1	
	99305-09	C	* * FRAME ASSEMBLY - Bottom, right	1	
	99305-00	J	* * FRAME ASSEMBLY - Bottom, left	1	
	99305-01	J	* * FRAME ASSEMBLY - Bottom, right	1	
-4	87332-02	K	* * * ROLLER - Seat	4	
-5	65003-47		* * * BUSHING - Seat roller	4	
-6	76175-02		* * * PLUNGER - Seat	2	
-7	50111-00		* * * SPRING - Seat plunger	2	
-8	26453-05		* * * TUBE ASSEMBLY - Reclining mechanism	1	
-9	19365-02		* * * * CAM - Reclining seat	2	
-10	32380-00		* * * HANDLE - Seat back adjustment	1	
-11	19336-00		* * * SPRING - Seat back adjustment, inboard	1	
	19336-01		* * * SPRING - Seat back adjustment, outboard	1	
-12	480 701		* * * PIN - Roll (59-028-125-0625)	3	
-13	480 727		* * * PIN - Roll (52-028-125-1000)	2	
-14	480 690		* * * PIN - Roll (52-040-187-1250)	10	
-15	27018-00		* * * ARM - Seat adjusting	4	
-16	26653-00		* * * HANDLE ASSEMBLY - Seat vertical adjusting	1	
-17	571 131		* * * * KNOB - (KN678-1)	1	
-18	26952-00		* * * * BLOCK - Seat adjustment	1	
-19	26965-00		* * * ANGLE ASSEMBLY - Seat adjustment, front	1	
-20	26965-02		* * * ANGLE ASSEMBLY - Seat adjustment, rear	1	
-21	26961-00		* * * CHANNEL - Seat adjustment	1	
-22	26966-00	L	* * * TUBE - Seat catch release	1	
-23	26953-00		* * * BUSHING - Seat	2	
-24	27244-00		* * * BOLT - Special	1	
	407 565		* * * WASHER - (AN960-416)	2	
	404 888		* * * NUT - (MS20365-428C)	1	
-25	401 315		* * * BOLT - (AN4-15A)	1	
	27245-00		* * * WASHER - Special	4	
	404 888		* * * NUT - (MS20365-428C)	1	
-26	78041-00	F,G	* COVER ASSEMBLY - Seat back	1	

When ordering, always specify Part Number, Description, and Serial Number of Aircraft

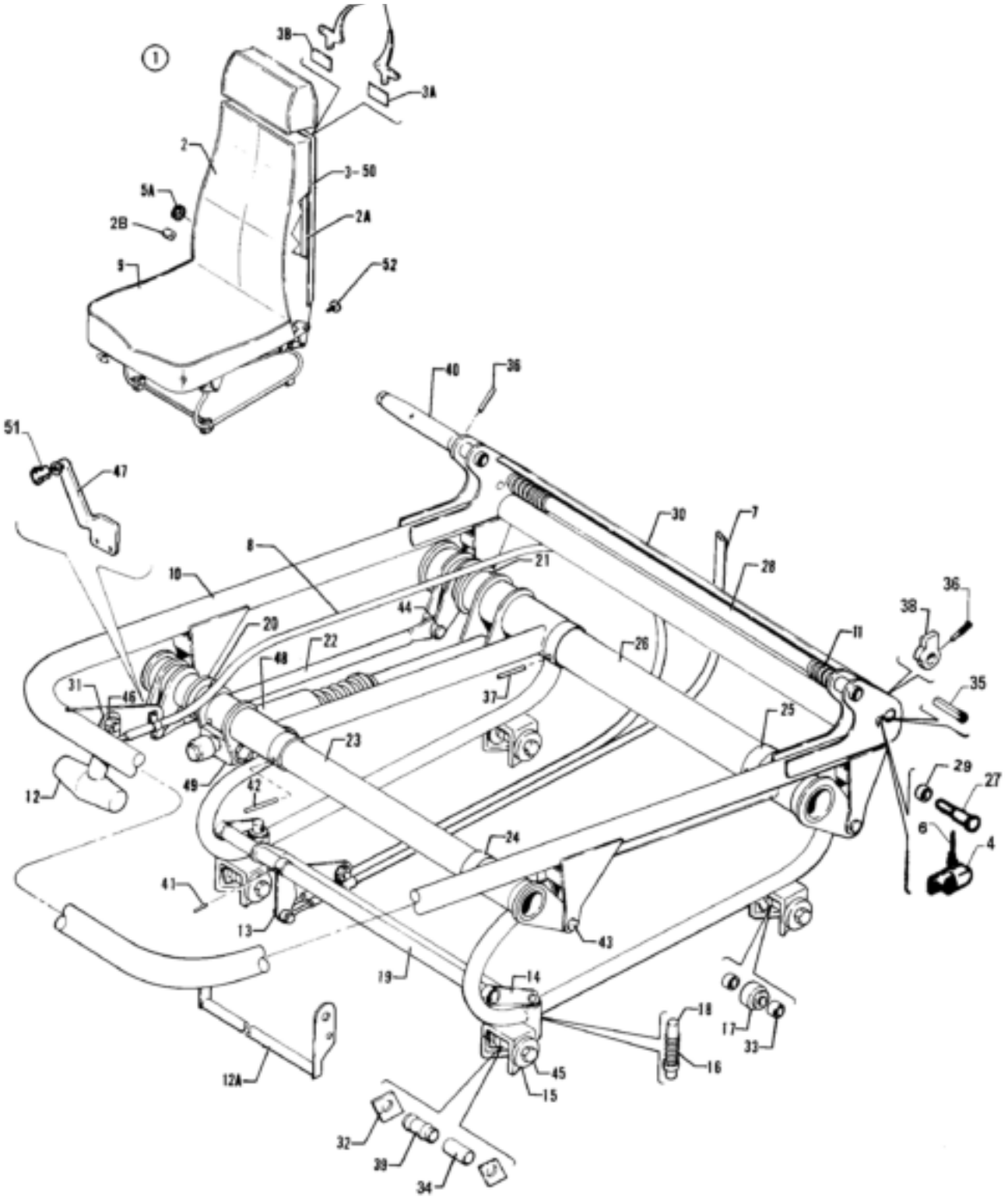

Figure 31. Vertically Adjustable Front Seat Assembly
(PA-32-260 - Serial Nos. 32-7400001 and up
(PA-32-300 - Serial Nos. 32-7440001)
(PA-32R-300 - Serial Nos. 32R-7680001 and up)

CODE EXPLANATIONS FOR FIGURE 31

A - Used on PA-32-260 with serial numbers 32-7400001 and up, PA-32-300 with serial numbers 32-7440001 and up, and PA-32R-300.
B - Used on PA-32-260 with serial numbers 32-7500043 and up, PA-32-300 with serial numbers 32-7540168 and up, and PA-32R-300.
C - If Seat Assembly incorporates a “U” shaped handle for the seat track releasing mechanism, order part for PA-32-260 with serial numbers 32-7500043 and up, PA-32-300 with serial numbers 32-7540168 and up, and PA-32R-300.
D - Used on PA-32-260 with serial numbers 32-7400001 to 32-7500042 inclusive, and PA-32-300 with serial numbers 32-7440001 to 32-7540167 inclusive.
E - When ordering, specify color red, blue/green, gold, black, white, green, blue, navajo sepia, navajo cactus or yellow/dark red. Specify trim color black or camel on 1977 and up model aircraft.
F - Used if rectangular teflon washer is installed.
G - Used if two pieces of tape are installed on seat frame.
H - When ordering, specify color red, blue/green, gold, black, white, green or bark. Specify color “bark 1” for PA-32-260 with serial numbers 32-7700001 to 32-7700013 inclusive, PA-32-300 with serial numbers 32-7740001 to 32-7740044 inclusive, and PA-32R-300 with serial numbers 32R-7780001 to 32R-7780214 inclusive. Specify color “bark II” for PA-32-260 with serial numbers 32-7700014 and up, PA-32-300 with serial numbers 32-7740045 and up, and PA-32R-300 with serial numbers 32R-7780215 and up.
J - Used on PA-32-260 with serial numbers 32-7400001 to 32-7600033 inclusive, PA-32-300 with serial numbers 32-7440001 to 32-7640142 inclusive, and PA-32R-300 with serial numbers 32R-7680001 to 32R-7680538 inclusive.
K - Used on PA-32-260 with serial numbers 32-7700001 and up, PA-32-300 with serial numbers 32-7740001 and up, and PA-32R-300 with serial numbers 32R-7780001 and up.
L - Used if seat adjustment control assembly 76445-00 (P.L. Porter Co. P/N SL10100 Rev. B) is installed.
M - Used if seat adjustment control assembly 587 404 (Gas Spring Corp. P/N 06-10-080-310-025) is installed.
N - Used on PA-32-260 with serial numbers 32-7800001 and up, PA-32-300 with serial numbers 32-7840001 and up, and PA-32R-300 with serial numbers 32R-7880001 and up.
O - When ordering, specify color olivetone, raspberry or tan. Specify color midnight blue (color code 785) for PA-32-260 with serial numbers 32-7800001 and up, PA-32-300 with serial numbers 32-7840001 to 32-7940149 incl., and PA-32R-300 with serial numbers 32R-7880001 and up. Specify color dark blue (color code 796) for PA-32-300 with serial numbers 32-7940150 and up.
P - Used on PA-32-260 with serial numbers 32-7700001 to 32-7700023 inclusive, PA-32-300 with serial numbers 32-7740001 to 32-7740113 inclusive, and PA-32R-300 with serial numbers 32R-7780001 to 32R-7780538 inclusive.
Q - Used on PA-32-260 with serial numbers 32-7800001 and up, PA-32-300 with serial numbers 32-7840001 to 32-7940149 incl., and PA-32R-300 with serial numbers 32R-7880001 and up.
R - Used on PA-32-300 only.
S - Before ordering, ascertain O.D. at center of seat roller. If O.D. of roller measures .42, (2) rollers P/N 18968-00 must be ordered. If O.D. of roller measures .62, order roller 87332-02 as required.
T - Ascertain part number stamped on control assembly. Reorder control assembly of same part number.

PIPER PARTS CATALOG

Figure and Index Number	Part Number	Code	NOMENCLATURE	No. Req.	SERIAL NUMBERS AFFECTED
31-1	79592-02	E	SEAT ASSEMBLY - Adjustable front, left	1	
	79592-04	N,O	SEAT ASSEMBLY - Adjustable front, left (luxurious)	1	
	79592-03	E	SEAT ASSEMBLY - Adjustable front, right	1	
	79592-05	N,O	SEAT ASSEMBLY - Adjustable front, right (luxurious)	1	
-2	96806-12	C,D,E	* CUSHION ASSEMBLY - Back, left	1	
	79337-16	B,E	* CUSHION ASSEMBLY - Back, left	1	
	79337-27	N,O	* CUSHION ASSEMBLY - Back, left (luxurious)	1	
	96806-22	C,D,E	* CUSHION ASSEMBLY - Back, right	1	
	79337-17	B,E	* CUSHION ASSEMBLY - Back, right	1	
	79337-28	N,O	* CUSHION ASSEMBLY - Back, right (luxurious)	1	
-2a	96810-02	C,D	* * FRAME ASSEMBLY - Back, left	1	
	96810-03	C,D	* * FRAME ASSEMBLY - Back, right	1	
	79555-00	B	* * FRAME ASSEMBLY - Back, left	1	
	79555-01	B	* * FRAME ASSEMBLY - Back, right	1	
-2b	453 732	B	* * * BUSHING - Seat back, right (PS10064-375-4)	1	
-3	78041-08	C,D,H	* * COVER ASSEMBLY - Seat back, right	1	
	78041-00	B,H	* * COVER ASSEMBLY - Seat back, right	1	
	78041-09	N,O	* * COVER ASSEMBLY - Seat back, right (luxurious)	1	
-3a	69669-13	D	* * * PLACARD - Seat back release, left	1	
-3b	69669-14	D	* * * PLACARD - Seat track release, right	1	
-4	99718-05		* * STOP ASSEMBLY - Seat latch, right	1	
-5	79228-00	D	* * HANDLE - Seat release, right	2	
-5a	79554-02	B	* * KNOB - Seat back release	1	
-6	99719-03	D	* * CABLE ASSEMBLY - Seat back release (passenger operated, length 27")	1	
-7	99719-16	D	* * CABLE ASSEMBLY - Seat track release (passenger operated, length 40")	1	
-8	554 422		* CABLE ASSEMBLY - Seat track release (crew operated, length 27") (PS50146-8-1)	1	
-9	555 563	J	* COVER ASSEMBLY - Seat bottom, red	1	
	555 564	J	* COVER ASSEMBLY - Seat bottom, blue/green	1	
	555 565	J	* COVER ASSEMBLY - Seat bottom, gold	1	
	555 568	J	* COVER ASSEMBLY - Seat bottom, green	1	
	555 566	J	* COVER ASSEMBLY - Seat bottom, black	1	
	555 567	J	* COVER ASSEMBLY - Seat bottom, white	1	
	555 953	K	* COVER ASSEMBLY - Seat bottom, red (with black trim)	1	
	555 954	K	* COVER ASSEMBLY - Seat bottom, blue (with black trim)	1	
	555 955	K	* COVER ASSEMBLY - Seat bottom, gold (with black trim)	1	
	555 956	P	* COVER ASSEMBLY - Seat bottom, green (with black trim)	1	
	555 957	P	* COVER ASSEMBLY - Seat bottom, black (with black trim)	1	
	555 884	K	* COVER ASSEMBLY - Seat bottom navajo sepia (with camel trim)	1	
	555 885	K	* COVER ASSEMBLY - Seat bottom navajo cactus (with camel trim)	1	
	555 886	P	* COVER ASSEMBLY - Seat bottom, orange (with camel trim)	1	
	555 887	P	* COVER ASSEMBLY - Seat bottom, blue/green (with camel trim)	1	
	555 888	K	* COVER ASSEMBLY - Seat bottom, navajo sepia (with black trim)	1	
	555 889	K	* COVER ASSEMBLY - Seat bottom, navajo cactus (with black trim)	1	
	555 890	P	* COVER ASSEMBLY - Seat bottom, orange (with black trim)	1	
	555 891	P	* COVER ASSEMBLY - Seat bottom, blue/green (with black trim)	1	
	556 342	N	* COVER ASSEMBLY - Seat bottom, red (with camel trim)	1	
	556 343	N	* COVER ASSEMBLY - Seat bottom, blue (with camel trim)	1	
	556 344	N	* COVER ASSEMBLY - Seat bottom, gold (with camel trim)	1	

When ordering, always specify Part Number, Description, and Serial Number of Aircraft

PIPER PARTS CATALOG

Figure and Index Number	Part Number	Code	NOMENCLATURE	No Req.	SERIAL NUMBERS AFFECTED
31-9	556 236	N	* COVER ASSEMBLY - Seat bottom, olivetone (luxurious)	1	
	556 237	Q	* COVER ASSEMBLY Seat bottom, midnight blue (luxurious)	1	
	556 705	R	* COVER ASSEMBLY - Seat bottom, dark blue (luxurious)	1	32-7940150 and up
	556 238	N	* COVER ASSEMBLY - Seat bottom, raspberry (luxurious)	1	
	556 239	N	* COVER ASSEMBLY - Seat bottom,tan (luxurious)	1	
-10	79540-00	L	* FRAME ASSEMBLY - Seat bottom, left	1	
	79540 02	M	* FRAME ASSEMBLY - Seat bottom, left	1	
	79540 01	L	* FRAME ASSEMBLY - Seat bottom, right	1	
	79540-03	M	* FRAME ASSEMBLY - Seat bottom, right	1	
-11	18336-00	W	* * SPRING - Seat back adjustment, inboard	1	
	18336-01	W	* * SPRING - Seat back adjustment, outboard	1	
12	571 149		* * KNOB - (P510017-1-1)	1	
-12a	79207-00		* * HANDLE - Seat release	1	
-13	76187-00		* * ARM ASSEMBLY - Seat release	1	
14	36858-02		* * ARM ASSEMBLY - Seat latch (forged)	2	
-15	62833-78		* * WASHER	8	
-16	587 299		* * SPRING - Seat plunger (LC-038F-6SS)	2	
-17	452 386		* * ROLLER - (NAS506-4)	2	
-18	76175 00		* * PLUNGER	2	
-19	76172-03		* * TUBE - Bellcrank	1	
-20	76347-01		* * BELLCRANK ASSEMBLY - Forward, left	1	
	36856-02		* * BELLCRANK ASSEMBLY - Forward, right	1	
-21	76362-00	L	* * BELLCRANK ASSEMBLY - Aft, left	1	
	79792-02	M	* * BELLCRANK ASSEMBLY - Aft, left	1	
	76362-01	L	* * BELLCRANK ASSEMBLY - Aft, right	1	
	79792-03	M	* * BELLCRANK ASSEMBLY - Aft, right	1	
22	36864-02		* * LINK ASSEMBLY - Seat (forged)	1	
-23	76343-00		* * TUBE ASSEMBLY - Forward	1	
-24	76351-02		* * BUSHING - Seat	2	
-25	76351-03		* * BUSHING - Seat	2	
-26	76361 00		* * TUBE ASSEMBLY - Aft	1	
-27	79229-00		* * BEARING SHAFT - Seat release, right	1	
-28	79230-00		* * TUBE - Seat reclining	1	
-29	79235-00		* * BUSHING - Seat track release, right	1	
-30	76176-00		* * COVER - Reclining seat	1	
-31	76169-02	D	* * LEVER - Seat	1	
32	79251-00		* * WASHER - Teflon	8	
-33	79252-00	F	* * SPACER - Seat	4	
	95061-151	G	* * SPACER - Seat	4	
-34	95061-108		* * SPACER	2	
-35	480 732	W	* * PIN - Roll (59-040-187-0937)	2	
36	490 701	W	* * PIN - Roll (59-028-125-0825)	3	
-37	480 790		* * PIN - (MS9048-172) (1.25 L)	4	
	480 801		* * PIN - (MS9048-173) (1.37 L)	4	
-38	19365 02	W	* * CAM - Reclining seat	2	
-39	87332-02	S	* * ROLLER - Seat	2	
-40	32380-00	W	* * HANDLE - Seat recliner, cadmium plated	1	
	79442-00		* * HANDLE - Seat recliner, black	1	
41	480 777		* * PIN - (MS9048-100) .50 long	3	
	480 592		* * PIN - (MS9048-101) .56 long	3	
-42	480 789		* * PIN - (MS9048-170)	4	
-43	424 174	W	* * PIN - (MS20392-2C11)	4	
	407 564	W	* * WASHER - (AN960-10)	4	
	424 061	W	* * COTTER PIN - (MS24665-132)	4	
-44	424 205		* * PIN - (MS20392-3C17)	2	
	407 566	W	* * WASHER - (AN960-416)	2	
	424 061	W	* * COTTER PIN - (MS24665-132)	2	

When ordering, always specify Part Number, Description and Serial Number of Aircraft

PIPER PARTS CATALOG

Figure and Index Number	Part Number	Code	NOMENCLATURE	No Req.	SERIAL NUMBERS AFFECTED
31-45	401 318	W	* * BOLT - (AN4-20A)	4	
	477 706		* * NUT (26C-048) Aft	2	
	477 708	F	* * NUT - (26C-048) Front	2	
	404 888	G,W	* * NUT - (MS20365-428C) Front	2	
46	400 002	W	* * BOLT - (AN4-5A)	1	
	494 133		* * WASHER - Nylon 1/4 ID	1	
	407 585	W	* * WASHER - (AN960-416L)	1	
	404 888	W	* * NUT - (MS20365-428C)	1	
47	37902-06	T	* CONTROL ARM - Actuator, left	1	
	37902-09	T	* CONTROL ARM - Actuator, right	1	
-48	76445-00		* CONTROL ASSEMBLY - Seat adjusrment (P L Porter Co P/N SL 10100 Rev B)	1	
	687 404		* CONTROL ASSEMBLY - Seat adjustment (Gas Spring Corp P/N 06 10-060 310 025)	1	
-49	37902 02	L	* ADAPTER - Seat control	1	
	37902 06	M	* ADAPTER - Seat control	1	
-50	78041-00	H	* COVER ASSEMBLY - Seat back, left	1	
-51	471 084		* KNOB - Actuator (233)	1	
	407 135	W	* WASHER - (AN936-A10)	1	
-52	67958-02		* BUTTON ASSEMBLY - Seat back	3	

When ordering, always specify Part Number, Description and Serial Number of Aircraft

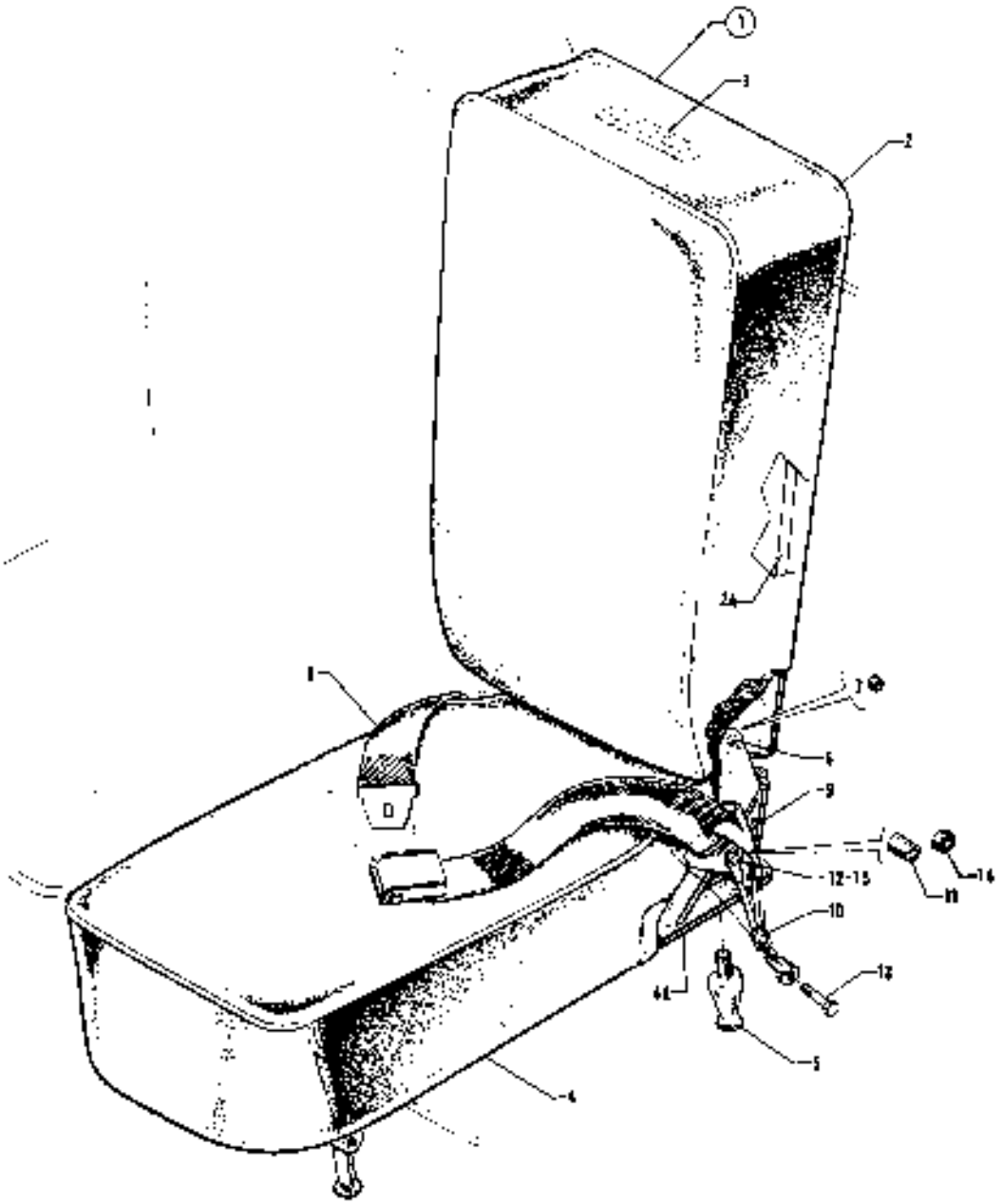

Figure 32. 7th Seat Installation

CODE EXPLANATIONS FOR FIGURE 32

A - When ordering, specify color red, brown, blue or beige
B - Used on PA-32-260 with serial numbers 32-7200001 to 32-7200055 incl , and PA-32-300 with serial numbers 32-7240001 to 32-7240147 incl
C - Used on PA-32-260 with serial numbers 32-1 to 32-1110 incl , and PA-32-300 with serial numbers 32-40000 to 32-40565 incl
D - When ordering specify color red, blue/green, gold, black, white, green, blue, navajo sepia, navajo cactus or yellow/dark red Specify trim color black or camel on 1977 and up model aircraft
E - When ordering, specify color red, blue, brown, beige or black
F - Used on PA-32-260 with serial numbers 32-1 to 32-1250 incl , and PA-32-300 with serial numbers 32-40000 to 32-40650 incl
G - Used on PA-32-260 with serial numbers 32-1111 to 32-1250 incl , and PA-32-300 with serial numbers 32-40566 to 32 40650 incl
H - When ordering, specify color red, blue black, beige, white or green
J Used on PA-32-260 with serial numbers 32-1 to 32-1320 incl , and PA-32-300 with serial numbers 32-40000 to 32-41018 incl
K - Used on PA-32-260 with serial numbers 32-7100001 and up, PA-32-300 with serial numbers 32-7140001 and up, and PA-32R-300
L - Used on PA-32-260 with serial numbers 32-1251 to 32-1320 incl , and PA-32-300 with serial numbers 32-40651 to 32-41018 incl
M - Used on PA-32-260 with serial numbers 32-7100001 to 32-7100038 incl , and PA-32-300 with serial numbers 32-7140001 to 32-7140086 incl
N - Used on PA-32-260 with serial numbers 32-7300001 and up, PA-32-300 with serial numbers 32-7340001 and up, and PA-32R-30
O - Used on PA-32-260 with serial numbers 32-7300001 to 32-7500002 incl , and PA-32-300 with serial numbers 32 7340001 to 32-7540028 incl
P - Used on PA 32-260 with serial numbers 32-7500003 to 32-7700011 incl , and PA-32-300 with serial numbers 32-7540029 to 32-7740042 incl
Q - Used on PA-32R-300 only
R Used on PA-32-260 with serial numbers 32-7500003 to 32-7700011 incl , PA-32-300 with serial numbers 32-7540029 to 32-7740042 incl , and PA 32R-300 with serial numbers 32R-7680001 to 32R-7780188 incl
S - Used on PA-32-300 with serial numbers 32-7940001 and up, and PA-32R-300 with serial numbers 32R-7880001 and up
T - Used on PA-32-260 with serial numbers 32-1 and up, and PA-32-300 with serial numbers 32-40000 to 32-7840222 incl , and PA-32R-300 with serial numbers 32R-7680001 to 32R-7780188 incl
U - Used on PA-32-260 with serial numbers 32-7200001 and up, PA-32-300 with serial numbers 32 7240001 and up, and PA-32R-300
V - Used on PA-32-260 with serial numbers 32-1 to 32-7100038 incl , and PA-32-300 with serial numbers 32-40000 to 32-7140086 incl
W - These parts must be ordered from Service Spares Department, Piper Aircraft, Lock Haven, Penna
X - Used on PA-32-260 with serial numbers 32-1 to 32-7500002 incl , and PA-32-300 with serial numbers 32-40000 to 32-7540028 incl
Y - Used on PA-32-260 with serial numbers 32-1 to 32-7600033 incl , PA-32-300 with serial numbers 32-40000 to 32-7640142 incl , and PA-32R-300 with serial numbers 32R-7680001 to 32R-7680538 incl
Z - Used on PA-32 260 with serial numbers 32-7700001 and up, PA-32-300 with serial numbers 32-7740001 and up, and PA-32R-300 with serial numbers 32R-7780001 and up
AA - Used on PA-32-260 with serial numbers 32-7700012 and up, and PA-32-300 with serial numbers 32-7740043 to 32-7840222 incl
AB - Used on PA-32-260 with serial numbers 32-7700012 and up, and PA-32-300 with serial numbers 32-7740043 and up, and PA-32R-300 with serial numbers 32R-7780189 and up
AC - When ordering, specify color oliveloma, raspberry or tan Specify color midnight blue (color code 785) for PA-32-260 with serial numbers 32-7800001 and up, PA-32-300 with serial numbers 32-7840001 to 32-7940149 incl , and PA-32R-300 with serial numbers 32R-7880001 and up Specify color dark blue (color code 786) for PA-32-300 with serial numbers 32-7940150 and up
AD - Used on PA-32-260 with serial numbers 32-7800001 and up, and PA-32-300 with serial numbers 32-7840001 to 32-7840222 incl
AE - Used on PA-32-260 with serial numbers 32-7800001 and up, PA-32-300 with serial numbers 32-7840001 and up, and PA-32R-300 with serial numbers 32R-7880001 and up

PIPER PARTS CATALOG

Figure and Index Number	Part Number	Code	NOMENCLATURE	No. Req	SERIAL NUMBERS AFFECTED
32-	69072	J	DRAWING - 7th Seat Installation		
	69595	K	DRAWING - 7th Seat Installation		
-1	69068-02	A,C	SEAT ASSEMBLY	1	
	69068-06	E,G	SEAT ASSEMBLY	1	
	69068-08	H,L	SEAT ASSEMBLY	1	
	69068-11	H,M	SEAT ASSEMBLY	1	
	69068-18	B,D	SEAT ASSEMBLY	1	
	78108-00	D,O	SEAT ASSEMBLY	1	
	78108-08	D,P	SEAT ASSEMBLY	1	
	78108-09	D,Q	SEAT ASSEMBLY	1	32R-7680001 to 32R-7780188 inc.
	78108-11	D,AA	SEAT ASSEMBLY	1	
	78108-12	D,S	SEAT ASSEMBLY	1	
	78108-13	AC,AD	SEAT ASSEMBLY (Luxurious)	1	
	78108-14	AC,S	SEAT ASSEMBLY - (Luxurious)	1	
-2	69068-04	A,C	* CUSHION AND FRAME ASSEMBLY - Back	1	
	69068-07	E,G	* CUSHION AND FRAME ASSEMBLY - Back	1	
	69068-09	H,L	* CUSHION AND FRAME ASSEMBLY - Back	1	
	69068-12	H,M	* CUSHION AND FRAME ASSEMBLY - Back	1	
	69068-17	B,D	* CUSHION AND FRAME ASSEMBLY - Back	1	
	78108-03	D,N	* CUSHION AND FRAME ASSEMBLY - Back	1	
	78108-15	AC,AE	* CUSHION AND FRAME ASSEMBLY - Back (luxurious)	1	
2a	69066-00		* * FRAME ASSEMBLY - Back	1	
-3	99435-00	T	* * PLACARD - 7th Seat limitations	1	
-4	69068-03	E,F	* CUSHION AND FRAME ASSEMBLY - Bottom	1	
	69068-10	H,L	* CUSHION AND FRAME ASSEMBLY - Bottom	1	
	69068-13	H,M	* CUSHION AND FRAME ASSEMBLY - Bottom	1	
	69068-16	B,D	* CUSHION AND FRAME ASSEMBLY - Bottom	1	
	78108-04	D,D	* CUSHION AND FRAME ASSEMBLY - Bottom	1	
	78108-07	D,R	* CUSHION AND FRAME ASSEMBLY - Bottom	1	
	78109-10	D,AB	* CUSHION AND FRAME ASSEMBLY - Bottom	1	
	78108-16	AC,AE	* CUSHION AND FRAME ASSEMBLY - Bottom (luxurious)	1	
-4a	69067-00	X	* * FRAME ASSEMBLY - Bottom	1	
	69067-09	R	* * FRAME ASSEMBLY - Bottom	1	
	69067-10	AB	* * FRAME ASSEMBLY - Bottom	1	
-5	69068-00	X	* * * FOOT - Seat attachment, rear	2	
	79436-00	R	* * * FOOT - Seat attachment, rear	2	
	69073-00	AB	* * * FOOT - Seat attachment, rear	1	
-6	400 670	W	* BOLT - (AN23-6)	2	
-7	63900-133		* BUSHING	2	
-8	651 376	U	BELT ASSEMBLY - Safety (PS50039-4-5) black	1	
-9	69022-14		BOOT - Seat belt attachment, black	2	
-10	65519-00	V	CABLE ASSEMBLY - Seat belt attachment	2	
	96908-00	U	CABLE ASSEMBLY - Seat belt attachment	2	
-11	14843-61	V,W	BUSHING - Seat belt attachment	2	
-12	400 440	V,W	BOLT - (AN3-6A)	2	
	404 889	V,W	NUT - (MS20365-1032C)	2	
-13	401 312	V,W	BOLT - (AN4-12A)	2	
	407 585	V,W	WASHER - (AN960-416)	12	
	404 888	V,W	NUT - (MS20365-428C)	2	
-14	63900-149	U	BUSHING - Seat belt attachment	2	
-15	401 197	U,W	BOLT - (AN5-7A)	2	
	407 566	U,W	WASHER - (AN960-516)	2	
	404 837	U,W	NUT - (MS20364-524C)	2	

When ordering, always specify Part Number, Description and Serial Number of Aircraft

1123

INTENTIONALLY LEFT BLANK

1124

INTENTIONALLY LEFT BLANK

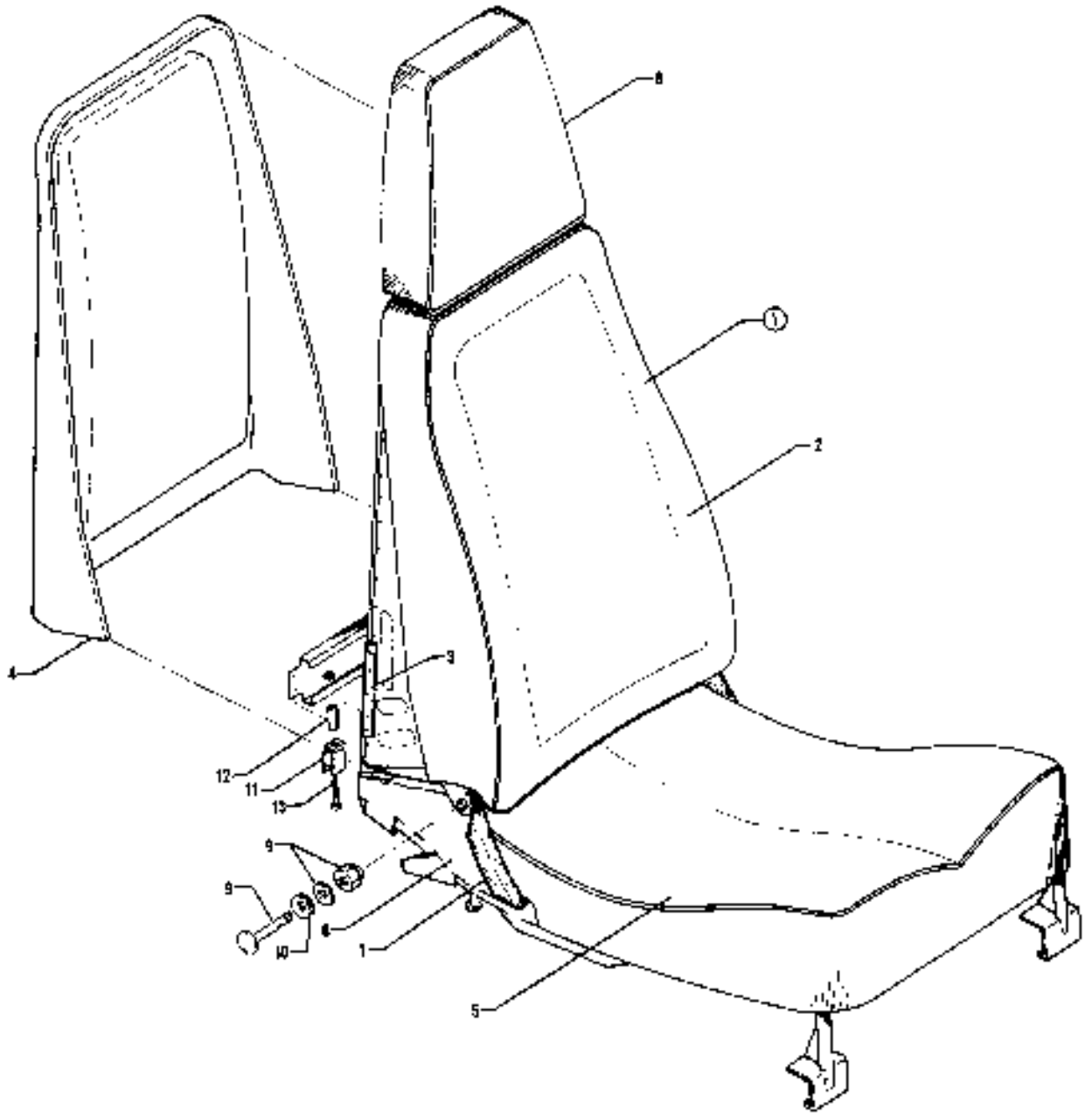

Figure 32A. Aft Facing Seat Assembly - Center
(PA-32-260 - Serial Nos. 32-7700001 and up)
(PA-32-300 - Serial Nos. 32-7740001 and up)
(PA-32R-300 - Serial Nos. 32R-7780001 and up)

CODE EXPLANATIONS FOR FIGURE 32A

A - Used on PA-32-260 with serial numbers 32-7700001 and up, PA-32-300 with serial numbers 32-7740001 and up, and PA-32R-300 with serial numbers 32R-7780001 and up.

B - When ordering, specify color red, blue/green, gold, black, green, blue, navajo cactus or yellow/dark red. Specify trim color black or camel. Also when ordering,specify with or without map rack for seat assembly.

C - Reference latest revision to Piper Service Letter 861, Part II for an improved method of retaining the rear facing seat backs in an upright position, applicable for PA-32-260 and PA-32-300. Friction washers p/n 408 834 are installed at the seat back hinge in lieu of existing clips.

D - When ordering for PA-32-260 with serial numbers 32-7700001 to 32-7700013 incl., PA-32-300 with serial numbers 32-7740001 to 32-774044 incl., and PA-32R-300 with serial numbers 32R-7780001 to 32R-7780214 incl., specify color “bark I.” When ordering for PA-32-260 with serial numbers 32-7700014 and up, PA-32-300 with serial numbers 32-7740045 and up, and PA-32R-300 with serial numbers 32R-7780215 and up, specify color “bark II.”

E - When ordering, specify color olivetone, raspberry, or tan. Specify color midnight blue (color code 785) when ordering for PA-32-260 with serial numbers 32-7700001 and up, PA-32-300 with serial numbers 32-7740001 to 32-7940149 incl., and PA-32R-300 with serial numbers 32-7780001 and up. Specify color dark blue (color code 796) when ordering for PA-32-300 with serial numbers 32-7940150 and up.

F - Used on PA-32-260 with serial numbers 32-7800001 and up, PA-32-300 with serial numbers 32-7840001 and up, and PA-32R-300 with serial numbers 32R-7880001 and up.

G - Used on PA-32-260 with serial numbers 32-7700001 and up, PA-32-300 with serial numbers 32-7740001 to 32-7840222 incl., and PA-32R-300 with serial numbers 32R-7780001 and up.

PIPER PARTS CATALOG

Figure and Index Number	Part Number	Code	NOMENCLATURE	No. Req.	SERIAL NUMBERS AFFECTED
32A-1	37799-02	B	SEAT ASSEMBLY - Center, aft facing	2	
	37799-10	E,F	SEAT ASSEMBLY - Center, aft facing (luxurious)	2	
-2	37799-03	B	* CUSHION ASSEMBLY - Seat back	1	
	37799-11	E,F	* CUSHION ASSEMBLY - Seat back (luxurious)	1	
-3	37796-02	C	* * FRAME ASSEMBLY - Seat back	1	
-4	37823-02	C,D	* * COVER ASSEMBLY - Seat back (without map rack)	1	
	37823-07	C,E,F	* * COVER ASSEMBLY - Seat back, (without map rack), luxurious	1	
	37840-02	C,D	* * COVER ASSEMBLY - Seat back (with map rack)	1	
-5	37799-04	B	* CUSHION ASSEMBLY - Seat bottom	1	
	37799-12	E,F	* CUSHION ASSEMBLY - Seat bottom (luxurious)	1	
-6	37797-02		* * FRAME ASSEMBLY - Seat bottom	1	
-7	37824-02	D	* * COVER - Seat bottom	2	
-8	37799-05	B	* HEADREST ASSEMBLY - Seat	1	
	37799-13	E,F	* HEADREST ASSEMBLY - Seat (luxurious)	1	
-9	400 916		* SCREW - (AN24-26A)	2	
	407 565		* WASHER - (AN960-416)	4	
	477 708		* NUT - (26C-048)	2	
-10	408 834		* WASHER - (AM251215)	2	
-11	554 753	C,G	* CLIP - (127002)	2	
-12	95061-153	G	* SPACER - Clip	2	
-13	411 537	G	* SCREW - (MS35207-268)	2	
	404 887	G	* NUT - (MS20365-1032C)	2	

When ordering, always specify Part Number, Description, and Serial Number of Aircraft

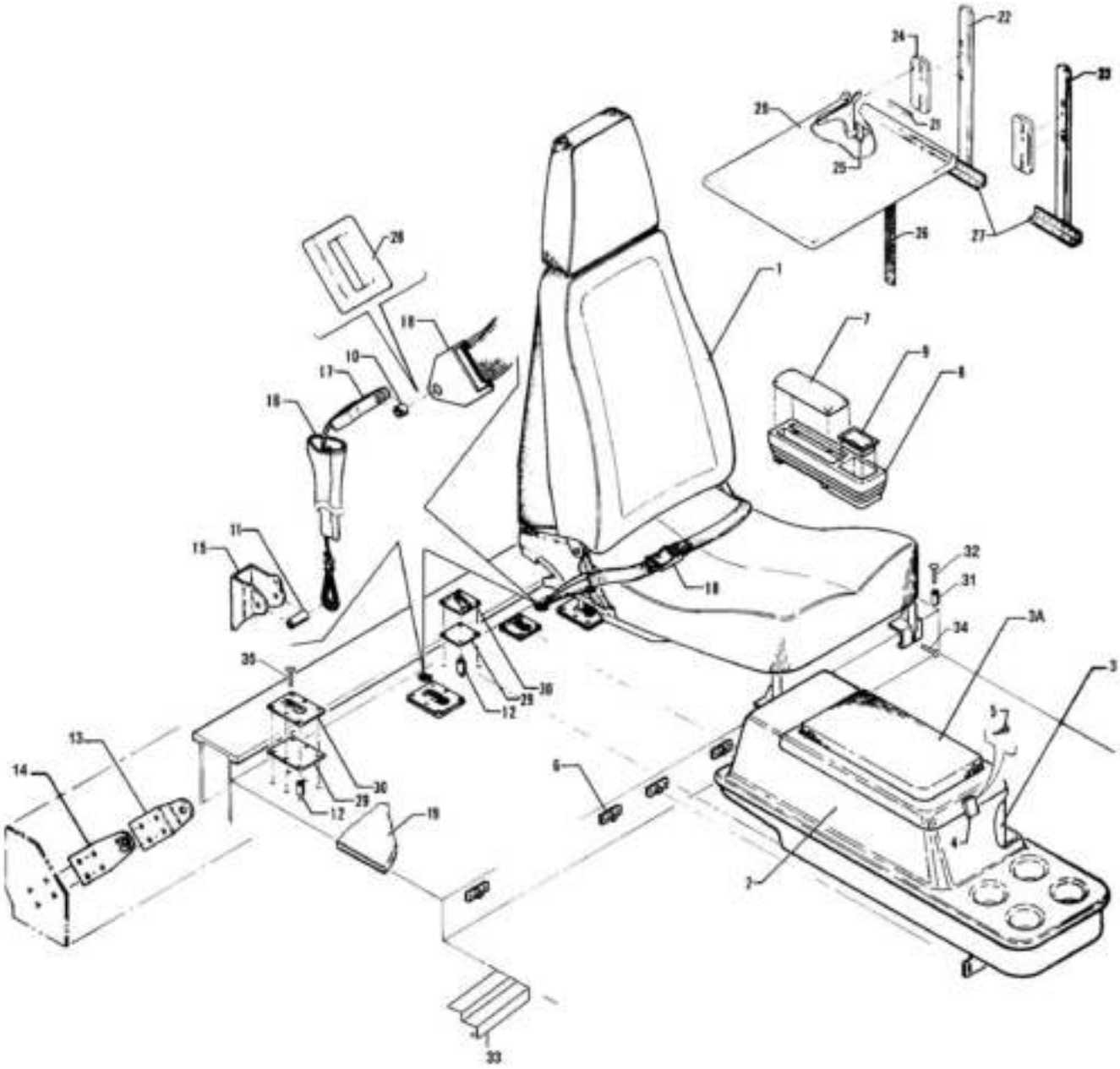

Figure 32B. Club Seating Installation
(PA-32-260 - Serial Nos. 32-7700001 and up)
(PA-32-300 - Serial Nos. 32-7740001 and up)
(PA32R-300 - Serial Nos. 32R-7780001 and up)

CODE EXPLANATIONS FOR FIGURE 32B

A - Used on PA-32-260 with serial numbers 32-7700001 and up, PA-32-300 with serial numbers 32-7740001 and up, and PA-32R-300 with serial numbers 32R-7780001 and up.
B - See Figure 32A for component parts.
C - When ordering, specify color red, blue/green, gold, black, green, blue, navajo cactus, navajo sepia or yellow/dark red. Also specify trim color, black or camel and with or without map rack.
D - When ordering, specify color olivetone, raspberry or tan. Specify color midnight blue (color code 785) for PA-32-260 with serial numbers32-7800001 and up, PA-32-300 with serial numbers 32-7840001 to 32-7940149 incl., and PA-32R-300 with serial numbers 32R-7880001 and up. Specify color dark blue (color code 796) for PA-32-300 with serial numbers 32-7940150 and up.
E - Used on PA-32-260 with serial numbers 32-7800001 and up, PA-32-300 with serial numbers 32-7840001 and up, and PA-32R-300 with serial numbers 32R-7880001 and up.
F - When ordering for PA-32-260 with serial numbers 32-7700001 to 32-7700013 inclusive, PA-32-300 with serial numbers 32-7740001 to 32-7740044 inclusive, and PA-32R-300 with serial numbers 32R-7780001 to 32R-7780214 inclusive, specify color “bark 1.” When ordering for PA-32-260 with serial numbers 32-7700014 to 32-7700023 inclusive, PA-32-300 with serial numbers 32-7740045 to 32-7740113 inclusive, and PA-32R-300 with serial numbers 32R-7780215 to 32R-7780549 inclusive, specify color “bark II” or black. When ordering for PA-32-260 with serial numbers 32-7800001 and up, PA-32-300 with serial numbers 32-7840001 and up, and PA-32R-300 with serial numbers 32R-7880001 and up, specify color “bark II and black,” or black.
G - When ordering, specify color “bark II” or black.
H - Used on PA-32-300 only.
J - Used on PA-32-260 with serial numbers 32-7800001 and up, PA-32-300 with serial numbers 3232-7840001 to 32-7940149 incl., and PA-32R-300 with serial numbers 32R-7880001 and up.
K - If all aircraft seats are not equipped with complete restraint systems (lap belt and shoulder harness), reference latest revision to Piper Service Bulletin 896, which provides shoulder harness kit numbers and a serial number applicability table.
L - Used if center console is not installed.
M - Used if center console is installed.

PIPER PARTS CATALOG

Figure and Index Number	Part Number	Code	NOMENCLATURE	No. Req.	SERIAL NUMBERS AFFECTED
32B-	37825		DRAWING - Club Seats Installation		
-1	37799-02	B,C	SEAT ASSEMBLY - Center, aft facing	1	
	37799-10	B,D,E	SEAT ASSEMBLY - Center, aft facing (luxurious)	1	
-2	79750-00	F	CONSOLE ASSEMBLY - Refreshment	1	
-3	758 097		* ICE CHEST - Console (3076-1)	1	
-3a	579 420		* ARM PAD ASSEMBLY - Console (camel)	1	
	579 421	E	* ARM PAD ASSEMBLY - Console (olivetone)	1	
	579 422	J	* ARM PAD ASSEMBLY - Console (midnight blue)	1	
	551 959	H	* ARM PAD ASSEMBLY - Console (dark blue)	1	32-7940150 and up
	579 423	E	* ARM PAD ASSEMBLY - Console (raspberry)	1	
	579 424	E	* ARM PAD ASSEMBLY - Console (tan)	1	
-4	761 301		* LATCH ASSEMBLY - (07-10-201-12)black	1	
-5	519 900		* SCREW - (MS51862-4C)	4	
-6	37850-02		PLATE ASSEMBLY - Seats	6	
-7	580 731		PAD - Armrest, camel	2	
	579 507	E	PAD - Armrest, olivetone	2	
	579 508	J	PAD - Armrest, midnight blue	2	
	579 474	H	PAD - Armrest, dark blue	2	32-7940150 and up
	579 509	E	PAD - Armrest, black	2	
	579 510	E	PAD - Armrest, tan	2	
-8	66710-17		HOUSING ASSEMBLY - Armrest, left	1	
	66710-16		HOUSING ASSEMBLY - Armrest, right	1	
-9	763 003		* ASHTRAY - (S-25-AR-C)	1	
-10	63900-149		BUSHING	2	
-11	95061-157		BUSHING	2	
-12	95061-09		SPACER	32	
-13	37834-02		LINK - Seat belt attachment	2	
-14	37835-02		LINK - Seat belt attachment	2	
-15	37839-02		FITTING - Seat belt attachment	2	
-16	68022-14		BOOT - Seat belt attachment	2	
-17	96908-00		CABLE ASSEMBLY - Seat belt	2	
-18	551 391	K	BELT ASSEMBLY - Safety, center (PS50039-4-3A)	2	
-19	37829-03		PANEL ASSEMBLY - Floor, center	1	
-20	36800-02	H	TABLE ASSEMBLY	1	
-21	35669-104	H	* PLACARD - Table stowage	1	
-22	36801-02	H	BRACKET ASSEMBLY - Table, mounting, forward	1	
-23	36801-03	H	BRACKET ASSEMBLY - Table, mounting, aft	1	
-24	36803-02	H	ESCUTCHEON - Table, mount	2	
-25	36802-02	H	CLIP COVER - Table	2	
-26	65440-10	H	STRAP ASSEMBLY - Table	1	
-27	37825-07	H	ANGLE - Table mounting bracket	1	32-7940001 and up
-28	67970-02	E,G	COVER - Seat belt attachment (luxurious)	2	
-29	99140-00		PLATE - Seat attachment	6	
-30	99141-00		PLATE - Seat attachment	6	
-31	95061-08		SPACER	6	
-32	414 772		SCREW - (MS24693-S55)	6	
	494 101		WASHER - (PS10092-1-2C)	6	
-33	66813-800	L	STIP - Trim	1	
	66813-801	M	STIP - Trim	1	
-34	400 009		BOLT - (AN4-14A)	6	
	407 585		WASHER - (AN960-416L)	6	
-35	415 540		SCREW - (MS35206-250)	36	
	407 563		WASHER - (AN960-8)	36	
	404 910		NUT - (MS20365-832C	36	

When ordering, always specify Part Number, Description, and Serial Number of Aircraft

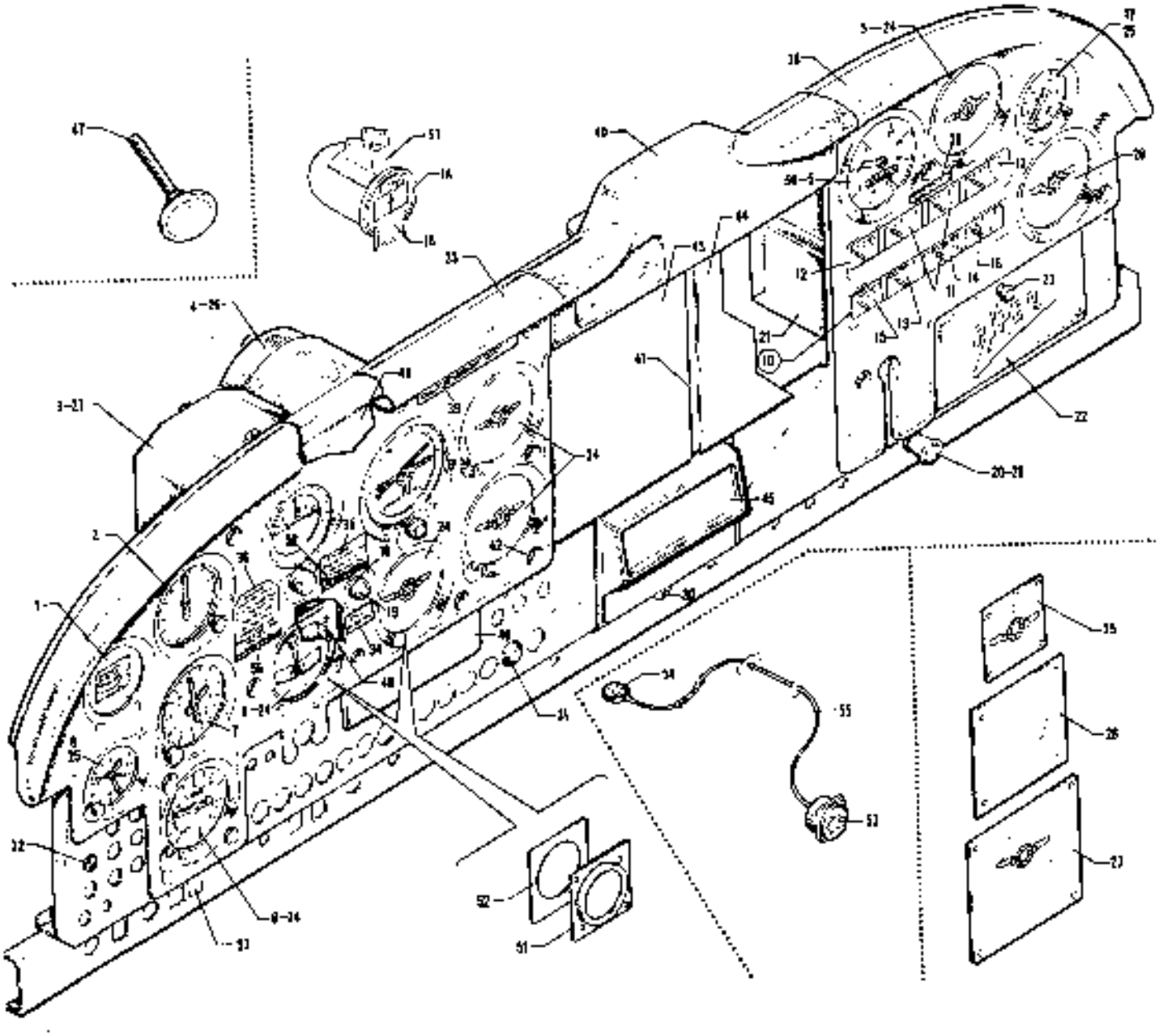

Figure 33 Instrument Panel Installation
(PA-32-260 - Serial Nos 32-1 to 32-1110 inclusive)
(PA-32-300 - Serial Nos 32-40000 to 32-40565 inclusive)

CODE EXPLANATIONS FOR FIGURE 33

A - Used on PA-32-260 with serial numbers 32-1 to 32-1110 inclusive, and PA-32-300 with serial numbers 32-40000 to 32-40565 incl.
B - Used on PA-32-260 only.
C - Used on PA-32-300 only.
D - Used on PA-32S-300 Seaplane Model only.
E - Used on PA-32-260 with serial numbers 32-1 to 32-896 inclusive, and PA-32-300 with serial numbers 32-40000 to 32-40292 incl.
F - Used on PA-32-260 with serial numbers 32-897 to 32-1110 inclusive, and PA-32-300 with serial numbers 32-40293 to 32-40565 inclusive.
G - Optional equipment.
H - No longer available.
J - Used if 3-inch gyros are not installed.
K - Used on PA-32-260 with serial numbers 32-376 to 32-1110 inclusive, and PA-32-300 with serial numbers 32-40000 to 32-40565 incl.
L - Used if 3-inch gyros are installed.
M - Used on PA-32-260 with serial numbers 32-51 to 32-1110 inclusive, and PA-32-300 with serial numbers 32-40000 to 32-40565 incl.
N - Used on PA-32-260 with serial numbers 32-451 to 32-896 inclusive, and PA-32-300 with serial numbers 32-40000 to 32-40292 incl.
O - Used if AutoControl II is installed.
P - Order this instrument as a replacement for Mitchell Turn and Bank 52D69 or P/N 41711-02 (Britain P/N 1681A) which are no longer available. Cable assembly P/N 63759-02 must also be ordered when Mitchell Turn and Bank 52D69 is being replaced.
Q - Used on PA-32-260 with serial numbers 32-1 to 32-1110 inclusive, and PA-32-300 with serial numbers 32-40000 to 32-40565 inclusive if Magnetic Compass Relocation Kit 760 795 has been installed per Service Letter 761.
R - See Figure 116 if AutoControl II is installed, Figure 117 if AutoControl III and AutoControl IIIB is installed, and Figure 118 if Altimatic III is installed.
S - Reference latest revision to Piper Service Spares Letter 406, which provides replacement part numbers for most all of the out of production Stewart Warner and A.C. Spark Plug Company indicating systems with Rochester gauges.
T - Reference latest revision to Piper Service Bulletin 811. Install Ammeter Replacement Kit 765-186 to eliminate full electrical power passing through the ammeter gauge.

PIPER PARTS CATALOG

Figure and Index Number	Part Number	Code	NOMENCLATURE	No. Req.	SERIAL NUMBERS AFFECTED
33-	68239	B	DRAWING - Instruments Installation		32-1 to 32-450 inclusive
	68388	B	DRAWING - Instruments Installation		32-451 to 32-1110 inclusive
	69025	C	DRAWING - Instruments Installation		
-1	450 765		INSTRUMENT - Compass (C2350-L41)	1	
-1a	67462-06	R	INSTRUMENT - Compass assembly	1	
-1b	79650-02		* HOLDER - Compass card	1	
-2	550 657		INSTRUMENT - True airspeed, adjustable (62143-09)	1	
	62143-10	D	INSTRUMENT - True airspeed, adjustable (550 740)	1	
	550 654		INSTRUMENT - Airspeed (63205-09) M.P.H.	1	
	550 512		INSTRUMENT - Airspeed (99632-08) knots	1	
	63205-10	D	INSTRUMENT - Airspeed (550 739)	1	
-3	550 647	E,H,R	INSTRUMENT - Directional gyro (31699-00)	1	
	755 427	F,R	INSTRUMENT - Directional gyro	1	
-4	550 646	E,H,R	INSTRUMENT - Gyro horizon (31698-00)	1	
	755 428	F,R	INSTRUMENT - Gyro horizon	1	
-5	550 614		INSTRUMENT - Tachometer (62177-02)	1	
-6	99010-00	G	INSTRUMENT - Rate of climb	1	
-7	550 493		INSTRUMENT - Altimeter, standard	1	
	99009-02	G	INSTRUMENT - Altimeter, sensitive (scale in inches of mercury)	1	
	99009-03	G	INSTRUMENT - Altimeter, sensitive (scale in millibars)	1	
-8	99478-00		INSTRUMENT - Clock	1	
-9	450 658		INSTRUMENT - Turn and bank (A5) vacuum	1	32-1 to 32-450 inclusive
	550 483	G	INSTRUMENT - Turn and bank (1234T100-5) electric	1	
	548 190	P	INSTRUMENT - Turn coordinator (1394T100) electric	1	
-10	68809-00	B	CLUSTER ASSEMBLY - Instrument	1	
	69051-00	C	CLUSTER ASSEMBLY - Instrument	1	
-11	687 259	S	* INSTRUMENT GAUGE - Fuel gauge, left main	1	
	687 258	S	* INSTRUMENT GAUGE - Fuel gauge, right main	1	
-12	687 263	S	* INSTRUMENT GAUGE - Fuel gauge, left tip	1	
	687 262	S	* INSTRUMENT GAUGE - Fuel gauge, right tip	1	
-13	87366-02	S	* INSTRUMENT GAUGE - Oil temperature	1	
-14	87391-02	B,S	* INSTRUMENT GAUGE - Fuel pressure	1	
	687 276	C,S	* INSTRUMENT GAUGE - Fuel pressure	1	
-15	687 272	S	* INSTRUMENT GAUGE - Oil pressure	1	
-16	687-277	S	* INSTRUMENT GAUGE - Ammeter	1	
	765 186	S,T	* AMMETER REPLACEMENT KIT	1	
-17	550 629		GAUGE - Suction (AW1821AF03)	1	
-18	472 712		* INDICATOR - Stall warning (95-1310-931)	1	
-19	751 453		* BULB	1	
-20	472 969		LIGHTER - Cigar (204 575)	1	
-21	62358-00		COMPARTMENT ASSEMBLY - Glove	1	
-22	62378-00		DOOR ASSEMBLY - Glove compartment	1	
-23	571 069		* KNOB - Glove compartment door	1	
-24	11199-00		PLATE ASSEMBLY - Cover	6	
-25	11199-08		PLATE ASSEMBLY - Cover	3	
-26	20622-00	J	PLATE ASSEMBLY - Cover	1	
	11199-00	F	PLATE ASSEMBLY - Cover	1	
-27	63216-00	J	PLATE ASSEMBLY - Cover	1	
	11199-00	F	PLATE ASSEMBLY - Cover	1	
-28	68271-00	B	PLATE ASSEMBLY - Cover	1	
	11199-00	C	PLATE ASSEMBLY - Cover	1	
-29	453 687		PLUG - Button (SS48189) (29/32" hole)	1	
-30	581 035		PLUG - Button (P-750) (3/4" hole)	1	
-31	453 716		PLUG - Button (HS5 1026) (3/4" hole)	5	
-32	453 720		PLUG - Button (SS5 1338-C5003) (1/2" hole)	3	

When ordering, always specify Part Number, Description, and Serial Number of Aircraft

PIPER PARTS CATALOG

Figure and Index Number	Part Number	Code	NOMENCLATURE	No. Req.	SERIAL NUMBERS AFFECTED
33-33	68406-00	B,J	COVER ASSEMBLY - Instrument panel, left	1	32-1 to 32-50 inclusive
	68406-02	B,J	COVER ASSEMBLY - Instrument panel, left	1	32-51 to 32-450 inclusive
	68406-03	B,J	COVER ASSEMBLY - Instrument panel, left	1	32-451 to 32-896 inclusive
	68406-04	C,J	COVER ASSEMBLY - Instrument panel, left	1	32-40000 to 32-40292 inclusive
	68006-00	B,H	COVER ASSEMBLY - Instrument panel, left	1	
	69006-02	C,H	COVER ASSEMBLY - Instrument panel, left	1	
-34	62697-00		PLACARD - Stall warning	1	
-35	62347-02		PLACARD - Landing check list	1	32-1 to 32-375 inclusive
	68164-03	K	PLACARD - Landing check list	1	
-36	68494-00	B	PLACARD - Take-off check list	1	
	69146-00	C	PLACARD - Take-off check list	1	
	69007-00	B,L	PLACARD - Take-off check list	1	
	68149-00	C,L	PLACARD - Take-off check list	1	
-37	68838-00		PLATE ASSEMBLY - Pitot heat switch cut-out	1	
-38	68407-00		COVER ASSEMBLY - Instrument panel, right	1	32-1 to 32-50 inclusive
	68407-02	M	COVER ASSEMBLY - Instrument panel, right	1	
-39	69084-00		PLACARD - Rough air or maneuvering	1	
	68166-00	D	PLACARD - Rough air or maneuvering	1	
-40	68550-00		COVER ASSEMBLY - Handhold	1	
-41	68410-00		STRIP - Instrument panel	1	
-42	415 150	W	SCREW - (AN525-632R10)	21	
-43	68851-00		COVER ASSEMBLY - Instrument panel, left (6 1/2" x 7")	1	
	68852-00		COVER ASSEMBLY - Instrument panel, left (6 1/2" x 4")	1	
	68853-00		COVER ASSEMBLY - Instrument panel, left (6 1/2" x 3 5/8")	1	
	68867-00		COVER ASSEMBLY - Instrument panel, left (6 1/2" x 3/4")	1	
-44	68851-00		COVER ASSEMBLY - Instrument panel, right (6 1/2" x 7")	1	
-45	62198-02		COVER - Instrument panel	1	
	62198-03	O	COVER - Instrument panel	1	
-46	63766-00		COVER ASSEMBLY - Instrument panel	1	
-47	550 662	W	GAUGE - Air temperature	1	
-48	65795-00		DOUBLER - Electric turn and bank mounting	1	
-49	68823-00	N	SUB PANEL - Gyro	1	
	68822-00	F	SUB PANEL - Gyro	1	
-50	69053-00	C	GAUGE - Manifold pressure and fuel flow	1	
-51	69080-00		COVER - Pictorial rate of turn and mixture control gauge	2	
-52	69169-00		PLATE - Pictorial rate of turn and mixture control gauge	2	
-53	751 912		GAUGE - Mixture control indicator	1	
-54	757 310		PROBE ASSEMBLY - Mixture control	1	
-55	756 618		WIRE ASSEMBLY - Mixture control gauge	1	
-56	69180-00	D	PLACARD - Seaplane, check list addition	2	
-57	79600-00	Q	BRACKET ASSEMBLY - Compass mounting	1	

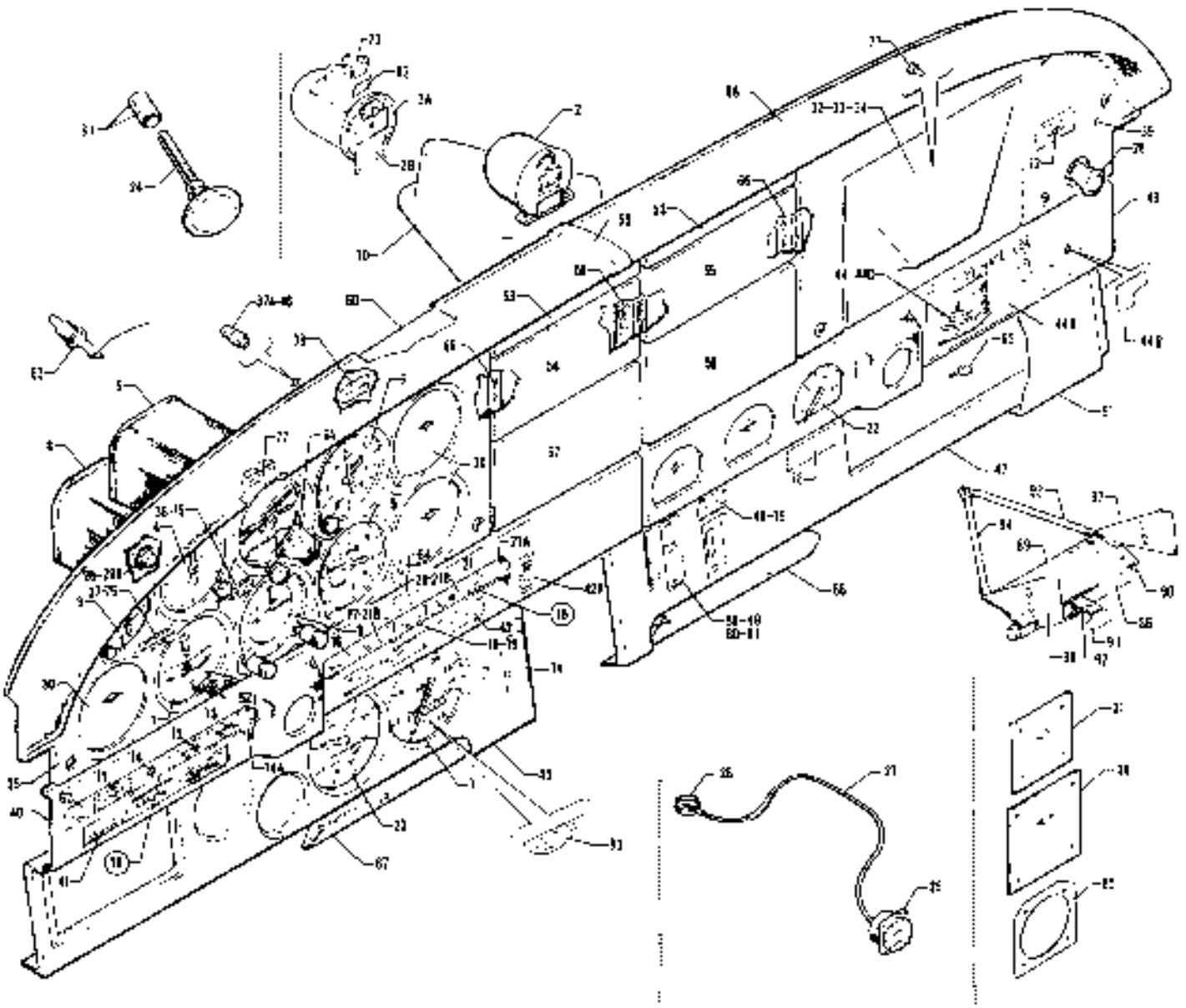

Figure 34 Instrument Panel Installation
(PA-32-260 - Serial Nos. 32-1111 and up)
(PA-32-300 - Serial Nos. 32-40566 and up)
(PA-32R-300 - Serial Nos. 32R-7680001 and up)

CODE EXPLANATIONS FOR FIGURE 34

A - Used on PA-32-260 with serial numbers 32-1111 and up, PA-32-300 with serial numbers 32-40666 and up, and PA-32R-300
B - Optional equipment
C - Used on PA-32-260 only
D - Used on PA-32-300 only
E - Used on PA-32S-300 Seaplane Model only
F - See Figure 115 if AutoFlite II is installed
G - Used on PA-32R-300 only
H - Used on PA-32-260 with serial numbers 32-1111 to 32-7600063 incl., and PA-32-300 with serial numbers 32-40566 to 32-7540198 incl
J - Used on PA-32-260 with serial numbers 32-7600001 and up, PA-32-300 with serial numbers 32-7640001 and up, and PA-32R-300
K - When ordering, specify color gold, blue, green, gray, red, black or bark. Specify color "bark I" for PA-32-260 with serial numbers 32-7700001 to 32-7700013 incl., PA-32-300 with serial numbers 32-7740001 to 32-7740044 incl., and PA-32R-300 with serial numbers 32R-7680001 to 32R-7680214 incl. Specify color "bark II" for PA-32-260 with serial numbers 32-7700014 and up, PA-32-300 with serial numbers 32-7740045 and up, and PA-32R-300 with serial numbers 32R-7680215 and up
L - Used on PA-32-260 with serial numbers 32-1111 to 32-1320 incl., and PA-32-300 with serial numbers 32-40666 to 32-41018 incl
M - Used on PA-32-260 with serial numbers 32-7100001 and up, PA-32-300 with serial numbers 32-7140001 and up, and PA-32R-300
N - Used on PA-32-260 with serial numbers 32-7300001 and up, PA-32-300 with serial numbers 32-7340001 and up, and PA-32R-300
O - Used on PA-32-260 with serial numbers 32-1111 to 32-7100038 incl., and PA-32-300 with serial numbers 32-40566 to 32-7140086 incl
P - Used on PA-32-260 with serial numbers 32-7200001 to 32-7200055 incl., and PA-32-300 with serial numbers 32-7240001 to 32-7240147 incl
Q - Used on PA-32-260 with serial numbers 32-7300001 to 32-7400061 incl., and PA-32-300 with serial numbers 32-7340001 to 32-7440182 incl
R - Used on PA-32-260 with serial numbers 32-7500001 and up, and PA-32-300 with serial numbers 32-7540001 and up
S - Used on PA-32-260 with serial numbers 32-7100001 to 32-7100038 incl., and PA-32-300 with serial numbers 32-7140001 to 32-7140086 incl
T - Used when Gear Ban lights are installed
U - Used if air conditioning has been installed
V - Order part for serial numbers 32-7340043 to 32-7640026 incl., and PA-32R-300 with serial numbers 32R-7680001 to 32R-7680031 incl if Air Conditioning Control System Modification Kit has been installed
W - These parts must be ordered from Service Spares Department, Piper Aircraft, Lock Haven, Penna
X - Used on PA-32-260 with serial numbers 32-7200001 to 32-7600033 incl., and PA-32-300 with serial numbers 32-7240001 to 32-7540142 incl
Y - Used on PA-32-260 with serial numbers 32-7400001 and up, PA-32-300 with serial numbers 32-7440001 and up, and PA-32R-300
Z - Used if fresh air blower has been installed
AA - Used on PA-32-260 with serial numbers 32-1111 to 32-7400061 incl., and PA-32-300 with serial numbers 32-40666 to 32-7440182 incl
AB - Order part number 68616-03 if Air Conditioning Control System Modification Kit has been installed
AC - Used on PA-32-260 with serial numbers 32-1111 to 32-1250 incl., 32-7300001 and up, PA-32-300 with serial numbers 32-40566 to 32-40851 incl., 32-7340001 and up, and PA-32R-300
AD - Used on PA-32-260 with serial numbers 32-1251 to 32-7200055 incl., and PA-32-300 with serial numbers 32-40851 to 32-7240147 incl
AE - Used on PA-32-260 with serial numbers 32-7400001 to 32-7400061 incl., and PA-32-300 with serial numbers 32-7440001 to 32-7440182 incl
AF - Used on PA-32-260 with serial numbers 32-7500001 and up, PA-32-300 with serial numbers 32-7540001 and up, and PA-32R-300
AG - Used on PA-32-260 with serial numbers 32-7100001 to 32-7400061 incl., and PA-32-300 with serial numbers 32-7140001 to 32-7440182 incl
AH - Used on PA-32-260 with serial numbers 32-1251 to 32-7400061 incl., and PA-32-300 with serial numbers 32-40851 to 32-7440182 incl
AJ - Used on PA-32-260 with serial numbers 32-1111 to 32-1250 incl., and PA-32-300 with serial numbers 32-40666 to 32-40850 incl
AK - Used on PA-32-300 with serial numbers 32-7240056 and up, and PA-32R-300
AL - Used on PA-32-260 with serial numbers 32-1111 to 32-7300075 incl., and PA-32-300 with serial numbers 32-40566 to 32-7340201 incl
AM - Used on PA-32-260 with serial numbers 32-7300001 to 32-7500040 incl., and PA-32-300 with serial numbers 32-7340001 to 32-7540158 incl
AN - When ordering, specify color red, blue/green, gold, black, green or bark. Specify color "bark I" for PA-32-260 with serial numbers 32-7700001 to 32-7700013 incl., PA-32-300 with serial numbers 32-7740001 to 32-7740044 incl., and PA-32R-300 with serial numbers 32R-7680001 to 32R-7680214 incl. Specify color "bark II" for PA-32-260 with serial numbers 32-7700014 and up, PA-32-300 with serial numbers 32-7740045 and up, and PA-32R-300 with serial numbers 32R-7680215 and up
AO - Used on PA-32-260 with serial numbers 32-7500041 and up, PA-32-300 with serial numbers 32-7540159 and up, and 32R-300
AP - Used when King KX-170 is installed
AQ - When ordering, specify color red, blue/green, gold, black, white, green, camel or mocha
AR - Used on PA-32-260 with serial numbers 32-7200001 to 32-7600040 incl., and PA-32-300 with serial numbers 32-7240001 to 32-7540168 incl
AS - Used on PA-32-260 with serial numbers 32-1 to 32-7100038 incl, and PA-32-300 with serial numbers 32-40000 to 32-7140086 incl

CODE EXPLANATIONS FOR FIGURE 34 (cont.)

AT - Used on PA-32-260 with serial numbers 32-1 to 32-7200055 incl., and PA-32-300 with serial numbers 32-40000 to 32-7240147 incl.
AU - Used on PA-32-260 with serial numbers 32-7300001 to 32-7500053 incl., and PA-32-300 with serial numbers 32-7340001 to 32-7540198 incl.
AV - Order this instrument as a replacement for Mitchell Turn and Bank 52D69, which is no longer available. Cable assembly part No. 63759-02 must also be ordered when making this replacement.
AW - Used on PA-32-300 with serial numbers 32-7440001 and up, and PA-32R-300.
AX - Used on PA-32-260 with serial numbers 32-1111 to 32-7500053 incl., and PA-32-300 with serial numbers 32-40566 to 32-7540198 incl. if magnetic compass relocation kit 760 795 has been installed per Service Letter 761.
AY - Used on PA-32-260 with serial numbers 32-1 to 32-7600033 incl., and PA-32-300 with serial numbers 32-40000 to 32-7640142.
AZ - Used on PA-32-260 with serial numbers 32-7700001 and up, and PA-32-300 with serial numbers 32-7740001 and up.
BA - Used on PA-32-260 with serial numbers 32-7500001 to 32-7600033 incl., and PA-32-300 with serial numbers 32-7540001 to 32-7640142 incl.
BB - Used on PA-32-300 with serial numbers 32-7340043 to 7840025 incl., and PA-32R-300 with serial numbers 32R-7680001 to 32R-7880031 incl. Order part for PA-32-300 with serial numbers 32-7840026 and up, and PA-32R-300 with serial numbers 32R-7880032 and up if the four position fan switch has been replaced with a three position fan switch.
BC - Used on PA-32R-300 with serial numbers 32R-7680001 to 32R-7680072 incl., 32R-7680074 to 32R-7680155 incl., 32R-7680157 to 32R-7680538 incl.
BD - Used on PA-32R-300 with serial numbers 32R-7680073, 32R-7680156, 32R-7780001 and up.
BE - Used on PA-32-260 with serial numbers 32-1 to 32-7600033 incl., PA-32-300 with serial numbers 32-40000 to 32-7640142 incl., and PA-32R-300 with serial numbers 32R-7680001 to 32R-7680538 incl.
BF - Used on PA-32-260 with serial numbers 32-7700001 and up, PA-32-300 with serial numbers 32-7740001 and up, and PA-32R-300 with serial numbers 32R-7780001 and up.
BG - Used on aircraft that comply with German Government Requirements.
BH - Used on PA-32-260 with serial numbers 32-7200001 to 32-7700005 incl., and PA-32-300 with serial numbers 32-7240001 to 32-7740012 incl.
BJ - Used on PA-32-260 with serial numbers 32-7600001 and up, and PA-32-300 with serial numbers 32-7640001 and up.
BK - Used if NSD-360 is installed.
BL - When ordering, specify color “bark II” or black.
BM - Used on PA-32-300 with serial numbers32-7540001 to 32-7840025 incl., and PA-32R-300 with serial numbers 32R-7680001 to 32R-7880031 incl. Order part for PA-32-300 with serial numbers 32-7840026 and up, and PA-32R-300 with serial numbers 32R-7880032 and up if the four position fan switch has been replaced with a three position fan switch.
BN - Used on PA-32-300 with serial numbers 32-7840026 and up, and PA-32R-300 with serial numbers 32R-7880032 and up.
BO - Used on PA-32-300 with serial numbers 32-40853, 32-7240056 to 32-7440182 incl. If the four position fan switch has been replaced with a three position fan switch.
BP - Used on PA-32-260 with serial numbers 32-7500001 to 32-7700023 incl., PA-32-300 with serial numbers 32-7540001 to 32-7840025 incl., and PA-32R-300 with serial numbers 32R-7680001 to 32R-7880031 incl. Order part for PA-32-260 with serial numbers 32-7800001 and up, PA-32-300 with serial numbers 32-7840026 and up, and PA-32R-300 with serial numbers 32R-7880032 an dup if the four position fan switch has been replaced with a three position fan switch.
BQ - Used on PA-32-260 with serial numbers 32-7800001 and up, PA-32-300 with serial numbers 32-7840026 and up, and PA-32R-300 with serial numbers 32-7880032 and up.
BR - Used on PA-32-260 with serial numbers 32-7400001 to 32-7700023 incl., PA-32-300 with serial numbers 32-7440001 to 32-7840025 incl., and PA-32R-300 with serial numbers 32R-7680001 to 32R-7880031 incl. Order part for PA-32-260 with serial numbers 32-7800001 and up, PA-32-300 with serial numbers 32-7840026 and up, and PA-32R-300 with serial numbers 32R-7880032 and up if the four position fan switch has been replaced with a three position fan switch.
BS - Used on PA-32-260 with serial numbers 32-1111 and up, and PA-32-300 with serial numbers 32-40566 to 32-7840222 incl.
BT - Used on PA-32R-300 with serial numbers 32R-7680001 and up, and PA-32-300 with serial numbers 32-7940001 and up.
BU - See Figure 117 if AutoControl III and AutoControl IIIB is installed, and Figure 119 or 119A if AltiMatic IIIC is installed.
BV - Instrument not approved for IFR.
BW - Used on PA-32R-300 with serial numbers 32R-7680001 and up, and PA-32-300 with serial numbers 32-7940001 to 32-7940146 incl.
BX - Used on PA-32R-300 with serial numbers 32R-7680001 and up, and PA-32-300 with serial numbers. 32-40566 to 32-7940146 incl.
BY - Reference latest revision to Piper Service Bulletin 403, applicable to PA-32-260 with serial numbers 32-7300001 to 32-7300024 incl., and PA-32-300 with serial numbers 32-7340001 to 32-7340081 incl. The stall warning light may be obstructed from the pilot’s view. Use Stall Warning Light Relocation Modification Kit P/N 760-808, to correct the problem.
BZ - Reference latest revision to Piper Service Bulletin 412. Plug P/N 581-025 has been replaced by P/N 690-817. Installation of restrictor plugs in the glove compartment corner openings will prevent objects in the compartment from falling through the openings into the aileron/stabilizer control “T” bar.
CA - Reference latest revision to Piper Service Spares Letter 406, which provides replacement part numbers for most all of the out of production Stewart Warner and A.C. Spark Plug Company indicating systems with Rochester gauges. Also reference latest revision to Piper Service Bulletin 811 for Ammeter Replacement Kit P/N 765-186 only.
CB - Reference latest revision to Piper Service Bulletin 533.

PIPER PARTS CATALOG

Figure and Index Number	Part Number	Code	NOMENCLATURE	No. Req.	SERIAL NUMBERS AFFECTED
34-	69332		DRAWING - Instruments installation, Flight		
	69331		DRAWING - Instruments installation, Engine		
-1	550 614		INSTRUMENT - Tachometer (62177-02)	1	
-2	67462-03	H	INSTRUMENT - Compass assembly	1	
-2a	67462-06	J,AX	INSTRUMENT - Compass assembly	1	
-2b	79650-02	J,AX	* HOLDER - Compass card	1	
-3	550 597	B	INSTRUMENT - Clock (AN5743-L2)	1	
	548 097	B	INSTRUMENT - Clock (CA-7613, electric)	1	
-4	550 654	AY	INSTRUMENT - Airspeed (63205-09) mph	1	
	550 512	AY	INSTRUMENT - Airspeed (99632-08) knots	1	
	548 120	AZ	INSTRUMENT - Airspeed (PS50049-35S-2) knots	1	
	63205-10	E	INSTRUMENT - Airspeed (550 739) mph	1	
	548 070	BC	INSTRUMENT - Airspeed (PS50049-22) mph	1	
	548 071	BC	INSTRUMENT - Airspeed (PS50049-24) knots	1	
	548 231	BD	INSTRUMENT - Airspeed (PS50049-38S) knots	1	
	550 657	AY	INSTRUMENT - True airspeed, adjustable (62143-09)	1	
	548 121	AZ	INSTRUMENT - True airspeed, adjustable (PS50049-35T)	1	
	62143-10	E	INSTRUMENT - True airspeed, adjustable (550 740)	1	32S-40566 to 32S-7240147 incl.
	548 068	BC	INSTRUMENT - True airspeed, adjustable (PS50049-23) mph	1	
	548 230	BD	INSTRUMENT - True airspeed, adjustable (PS50049-38T) knots	1	
-5	755 428	BU	INSTRUMENT - Gyro horizon	1	
	99002-06	BU	INSTRUMENT - Gyro horizon (with adjusting knob covered)	1	
-6	450 611	BE	INSTRUMENT - Altimeter, standard (11343-00)	1	
	548 153	BF,BV	INSTRUMENT - Altimeter, standard (scale in inches of mercury to 20,000 feet)	1	
	550 493		INSTRUMENT - Altimeter, sensitive (scale in inches of mercury to 20,000 feet)	1	
	550 491		INSTRUMENT - Altimeter, sensitive (scale in millibars to 20,000 feet)	1	
	550 489		INSTRUMENT - Altimeter, sensitive (scale in inches of mercury to 35,000 feet)	1	
	550 488		INSTRUMENT - Altimeter, sensitive (scale in millibars to35,000 feet)	1	
	548 330	D	INSTRUMENT - Altimeter, sensitive (scale in inches of mercury and millibars to 20,000 feet	1	
	548 331	D	INSTRUMENT - Altimeter, sensitive (scale in inches of mercury and millibars to 35,000 feet)	1	
	548 039		INSTRUMENT - Altimeter, encoding (scale in inches of mercury to 35,000 feet)	1	
	548 040		INSTRUMENT - Altimeter, encoding (scale in millibars to 35,000 feet)	1	
	548 407	D	INSTRUMENT - Altimeter,encoding (scale in inches of mercury and millibars to 35,000 feet)	1	
-7	550 483	F	INSTRUMENT - Turn and bank (1234T100-5)	1	
	548 190	F,AV	INSTRUMENT - Turn coordinator (1394T100) electric	1	
-8	755 427	BU	INSTRUMENT - Directional gyro	1	
-9	99010-02	B	INSTRUMENT - Rate of climb	1	
-10	95241-11		CLUSTER ASSEMBLY - Instrument	1	
-11	687 271	BS,CA	* GAUGE - Oil pressure	1	
	87382-02	BT,CA	* GAUGE - Oil pressure	1	
-12	87366-02	CA	* GAUGE - Oil temperature	1	
	553 672	CA	* SENDER - Oil temperature	1	
-13	687 277	CA	* GAUGE - Ammeter, 60 amp	1	
	765 186	CA	* AMMETER REPLACEMENT KIT	1	

When ordering, always specify Part Number, Description, and Serial Number of Aircraft

PIPER PARTS CATALOG

Figure and Index Number	Part Number	Code	NOMENCLATURE	No. Req.	SERIAL NUMBERS AFFECTED
34-14	79376-00		* PLATE ASSEMBLY - Cover	1	
-14a	79381-00		* LENS - Instrument cluster	1	
-15	95241-15	C	CLUSTER ASSEMBLY - Instrument	1	
	95241-16	D	CLUSTER ASSEMBLY - Instrument	1	32-40566 to 32-7840222 incl.
	95241-19	BW	CLUSTER ASSEMBLY - Instrument	1	
	95241-25	D	CLUSTER ASSEMBLY - Instrument	1	32-7940147 and up
-16	79366-00	BS	* GAUGE - Fuel, left tip, 17 gallon	1	
-17	687 259	BS,CA	* GAUGE - Fuel, left main, 25 gallon	1	
-18	87391-02	C,CA	* GAUGE - Fuel pressure (0-10 PSI)	1	
-19	687 276	D,CA	* GAUGE - Fuel pressure (0-50 PSI)	1	32-40566 to 32-7840222 incl.
	687 275	BW,CA	* GAUGE - Fuel pressure (0-50 PSI)	1	
	79376-00	D	* PLATE ASSEMBLY - Cover	1	32-7940147 and up
-20	687 258	BS,CA	* GAUGE - Fuel, right main, 25 gallon	1	
-21	687 262	BS,CA	* GAUGE - Fuel, right tip, 17 gallon	1	
-21a	79381-00		* LENS - Cluster assembly	1	
-21b	38224-00	BT	GAUGE - Fuel, left and right main, 47.5 gallon	2	
-22	550 629	L	GAUGE - Suction (AW1821AF03)	1	
	99480-00	M	GAUGE - Suction (1G10-1)	1	
-23	550 465	BX	GAUGE - Manifold pressure and fuel flow	1	
	548 343	D	GAUGE - Manifold pressure and fuel flow	1	32-7940147 and up
	751 118	C	GAUGE - Manifold pressure	1	
-24	550 662		GAUGE - Air temperature (NHM70)	1	
-25	751 912	B	GAUGE - Mixture control indicator	1	
-26	757 310	B	PROBE ASSEMBLY - Mixture control	1	
-27	756 616	B	WIRE ASSEMBLY - Mixture control gauge	1	
-28	67422-04	H,BY	INDICATOR - stall warning	1	
-28a	472 054	H	BULB - (330)	1	
-29	472 969	B	LIGHTER - Cigar (204 575)	1	
-30	67431-00		PLATE ASSEMBLY - Cover, instrument panel	8	
-31	67431-04		PLATE ASSEMBLY - Cover, instrument panel	4	
-32	69328-00	BZ	BOX - Glove	1	
-33	69329-00		DOOR - Glove box	1	
-34	69330-00	O	COVER - Glove box, black	1	
	69330-02	P	COVER - Glove box, tan	1	
	69330-03	K,N	COVER - Glove box	1	
-35	69335-00	L	COVER ASSEMBLY - Instrument panel, upper left, black	1	
	99229-00	S	COVER ASSEMBLY - Instrument panel, upper left, black	1	
	99229-04	P	COVER ASSEMBLY - Instrument panel, upper left, tan	1	
	69658-00	K,Q	COVER ASSEMBLY - Instrument panel, upper left	1	
	69816-02	K,R	COVER - Instrument panel, upper left	1	
	69816-07	G,K	COVER - Instrument panel, upper left	1	
	79571-02	K,BJ,BK	COVER ASSEMBLY - Instrument panel, upper left	1	
	79571-04	G,K,BK	COVER ASSEMBLY - Instrument panel, upper left	1	
	69398-00	F,L	COVER AND LIGHTS ASSEMBLY - Instrument panel, upper left, black	1	
	99434-00	F,S	COVER AND LIGHTS ASSEMBLY - Instrument panel, upper left, black	1	
	99434-02	F,P	COVER AND LIGHTS ASSEMBLY - Instrument panel, upper left, tan	1	
	69661-00	F,K,Q	COVER AND LIGHTS ASSEMBLY - Instrument panel, upper left	1	
-36	581 502	AA	* PLACARD - Maneuvering speed, mph (69353-00)	1	
	581 964	AA	* PLACARD - Maneuvering speed, knots (69664-00)	1	
	581 342	E	* PLACARD - Rough air or maneuvering (69156-00)	1	32S-40566 to 32S-7240147 incl.
-37	581 503	AA	* PLACARD - Crosswind component, mph (69354-00)	1	
	581 971	AA	* PLACARD - Crosswind component, knots (69665-00)	1	
-37a	472 054	F	* BULB - (330)	10	
-38	582 250	AF	* PLACARD - Press test (69669-39)	1	

When ordering, always specify Part Number, Description, and Serial Number of Aircraft

PIPER PARTS CATALOG

Figure and Index Number	Part Number	Code	NOMENCLATURE	No. Req.	SERIAL NUMBERS AFFECTED
S4-39	69337-00	L	COVER ASSEMBLY - Instrument panel, upper right, black	1	
	99432-00	S	COVER ASSEMBLY - Instrument panel, upper right, black	1	
	99432-03	P	COVER ASSEMBLY - Instrument panel, upper right, tan	1	
	69659-00	K,N	COVER - Instrument panel, upper right	1	
-40	69338-02	AC	COVER - Instrument panel, left, black	1	
	69379-02	AD	COVER - Instrument panel, left, black	1	
-41	69364-00	C	PLACARD - Take-off check list	1	32-1113 to 32-7100038 incl
	69636-00	C	PLACARD - Take-off check list	1	32-7200001 and up
	69484-00	D	PLACARD - Take-off check list	1	32-40566 to 32-7140086 incl
	69637-00	D	PLACARD - Take-off check list	1	32-7240001 to 32-7240055 incl
	69649-00	D	PLACARD - Take-off check list	1	32-7240066 and up
	67879-00	G	PLACARD - Take-off check list	1	
-42	69366-00	O	PLACARD - Landing check list	1	
	69638-00	X	PLACARD - Landing check list, mph	1	
	69638-02	X	PLACARD - Landing check list, knots	1	
	69669-126	AZ	PLACARD - Landing check list, knots	1	
	67878-00	BC	PLACARD - Landing check list, mph	1	
	67878-02	BC	PLACARD - Landing check list, knots	1	
	69669-125	BD	PLACARD - Landing check list, knots	1	
3-42a	99821-00	AK	PLACARD - Air condition door light	1	
-43	69339-00	AA	COVER ASSEMBLY - Instrument panel, right, black	1	
	69631-02	AF,BL	COVER ASSEMBLY - Instrument panel, right	1	
	69615-00	D,U,AB	COVER ASSEMBLY - Instrument panel, right, black	1	32-40853, 32-7240056 to 32-7340042 inclusive
	69615-03	D,U	COVER ASSEMBLY - Instrument panel, right, black	1	32-7340043 to 32-7440182 incl
	69631-00	U,BL,BM	COVER ASSEMBLY - Instrument panel, right	1	
	69631-09	U,BL,BN	COVER ASSEMBLY - Instrument panel, right	1	
	69777-00	Z,AE	COVER ASSEMBLY - Instrument panel, right, black	1	
	69631-05	Z,BL,BP	COVER ASSEMBLY - Instrument panel, right	1	
	69631-07	Z,BL,BQ	COVER ASSEMBLY - Instrument panel, right	1	
-44	67241-00	AA	* PLACARD - Heater and defrost	1	
	35669-28	AA	* PLACARD - Heater and defrost (lift to actuate)	1	
-44a	69616-00	D,U,V	* PLACARD - Air conditioning control panel	1	32-40853, 32-7240056 to 32-7340042 inclusive
	69678-00	U,BB	* PLACARD - Air conditioning control panel	1	
	69678-02	U,BN	* PLACARD - Air conditioning control panel	1	
-44b	69669-25	Z,BR	* PLACARD - Vent fan control (four position)	1	
	35669-38	Z,BQ	* PLACARD - Vent fan control (three position)	1	
-44c	67241-00	AF	PLACARD - Heater and defrost	1	
	35669-28	AF	PLACARD - Heater and defrost (lift to actuate)	1	
-45	69357-07	AA	COVER ASSEMBLY - Instrument panel, lower left, black	1	
	69357-08	AA	COVER ASSEMBLY - Instrument panel, lower left, red	1	
	69357-09	L	COVER ASSEMBLY - Instrument panel, lower left, blue	1	
	69357-10	AJ	COVER ASSEMBLY - Instrument panel, lower left, brown	1	
	69357-11	AA	COVER ASSEMBLY - Instrument panel, lower left, tan	1	
	69357-14	AH	COVER ASSEMBLY - Instrument panel, lower left, green	1	
	69357-15	AH	COVER ASSEMBLY - Instrument panel, lower left, white	1	
	69357-17	AG	COVER ASSEMBLY - Instrument panel, lower left, blue/green	1	
	69397-00	T	COVER AND LIGHTS ASSEMBLY - Instrument panel, lower left, black	1	
	69397-02	T	COVER AND LIGHTS ASSEMBLY - Instrument panel, lower left, red	1	
	69397-03	L,T	COVER AND LIGHTS ASSEMBLY - Instrument panel, lower left, blue	1	
	69397-04	T,AJ	COVER AND LIGHTS ASSEMBLY - Instrument panel, lower left, brown	1	
	69397-05	T	COVER AND LIGHTS ASSEMBLY - Instrument panel, lower left, tan	1	

PIPER PARTS CATALOG

Figure and Index Number	Part Number	Code	NOMENCLATURE	No. Req.	SERIAL NUMBERS AFFECTED
24-45	69397-08	T,AH	COVER AND LIGHTS ASSEMBLY - Instrument panel, lower left, green	1	
	69397-09	T,AH	COVER AND LIGHTS ASSEMBLY - Instrument panel, lower left, white	1	
	69397-10	T,AG	COVER AND LIGHTS ASSEMBLY - Instrument panel, lower left, blue/green	1	
	69817-00	R,AN	COVER ASSEMBLY - Instrument panel, lower left	1	
	69817-03	G,AN	COVER ASSEMBLY - Instrument panel, lower left	1	
-46	472 064	W	* BULB - (330)	2	
-47	69358-12	C	COVER ASSEMBLY - Instrument panel, lower right, black	1	32-1111 to 32-7100038 incl
	69358-13	C	COVER ASSEMBLY - Instrument panel, lower right, red	1	32-1111 to 32-7100038 incl
	69358-14	C	COVER ASSEMBLY - Instrument panel, lower right, blue	1	32-1111 to 32-1320 inclusive
	69358-15	C	COVER ASSEMBLY - Instrument panel, lower right, brown	1	32-1111 to 32-1250 inclusive
	69358-16	C	COVER ASSEMBLY - Instrument panel, lower right, tan	1	32-1111 to 32-7100038 incl
	69358-19	C	COVER ASSEMBLY - Instrument panel, lower right, green	1	32-1251 to 32-7100038 incl
	69358-21	C	COVER ASSEMBLY - Instrument panel, lower right, white	1	32-1251 to 32-7100038 incl
	69358-25	C	COVER ASSEMBLY - Instrument panel, lower right, blue/green	1	32-7100001 to 32-7100038 incl
	69627-08	C	COVER ASSEMBLY - Instrument panel, lower right, red	1	32-7200001 to 32-7300076 incl
	69627-09	C	COVER ASSEMBLY - Instrument panel, lower right, blue/green	1	32-7200001 to 32-7300076 incl
-47	69627-10	C	COVER ASSEMBLY - Instrument panel, lower right, tan	1	32-7200001 to 32-7300076 incl
	69627-11	C	COVER ASSEMBLY - Instrument panel, lower right, black	1	32-7200001 to 32-7300076 incl
	69627-12	C	COVER ASSEMBLY - Instrument panel, lower right, white	1	32-7200001 to 32-7300076 incl
	69627-13	C	COVER ASSEMBLY - Instrument panel, lower right, green	1	32-7200001 to 32-7300076 incl
	69780-08	C	COVER ASSEMBLY - Instrument panel, lower right, red	1	32-7400001 to 32-7500040 incl
	69780-09	C	COVER ASSEMBLY - Instrument panel, lower right, blue/green	1	32-7400001 to 32-7500040 incl
	69780-10	C	COVER ASSEMBLY - Instrument panel, lower right, tan	1	32-7400001 to 32-7500040 incl
	69780-11	C	COVER ASSEMBLY - Instrument panel, lower right, black	1	32-7400001 to 32-7500040 incl
	69780-12	C	COVER ASSEMBLY - Instrument panel, lower right, white	1	32-7400001 to 32-7500040 incl
	69780-13	C	COVER ASSEMBLY - Instrument panel, lower right, green	1	32-7400001 to 32-7500040 incl
	69358-07	D	COVER ASSEMBLY - Instrument panel, lower right, black	1	32-40566 to 32-7140086 incl
	69358-08	D	COVER ASSEMBLY - Instrument panel, lower right, red	1	32-40566 to 32-7140086 incl
	69358-09	D	COVER ASSEMBLY - Instrument panel, lower right, blue	1	32-40566 to 32-41018 inclusive
	69358-10	D	COVER ASSEMBLY - Instrument panel, lower right, brown	1	32-40566 to 32-40860 inclusive
	69358-11	D	COVER ASSEMBLY - Instrument panel, lower right, tan	1	32-40566 to 32-7140086 incl
	69358-20	D	COVER ASSEMBLY - Instrument panel, lower right, green	1	32-40851 to 32-7140086 incl
	69358-22	D	COVER ASSEMBLY - Instrument panel, lower right, white	1	32-40851 to 32-7140086 incl
	69358-24	D	COVER ASSEMBLY - Instrument panel, lower right, blue/green	1	32-7140001 to 32-7140086 incl
	69627-14	D	COVER ASSEMBLY - Instrument panel, lower right, red	1	32-7240001 to 32-7340201 incl
	69627-15	D	COVER ASSEMBLY - Instrument panel, lower right, blue/green	1	32-7240001 to 32-7340201 incl
	69627-16	D	COVER ASSEMBLY - Instrument panel, lower right, tan	1	32-7240001 to 32-7340201 incl
	69627-17	D	COVER ASSEMBLY - Instrument panel, lower right, black	1	32-7240001 to 32-7340201 incl
	69627-18	D	COVER ASSEMBLY - Instrument panel, lower right, white	1	32-7240001 to 32-7340201 incl
	69627-19	D	COVER ASSEMBLY - Instrument panel, lower right, green	1	32-7240001 to 32-7340201 incl
	69780-14	D	COVER ASSEMBLY - Instrument panel, lower right, red	1	32-7440001 to 32-7540158 incl
	69780-15	D	COVER ASSEMBLY - Instrument panel, lower right, blue/green	1	32-7440001 to 32-7540158 incl
	69780-16	D	COVER ASSEMBLY - Instrument panel, lower right, tan	1	32-7440001 to 32-7540158 incl
	69780-17	D	COVER ASSEMBLY - Instrument panel, lower right, black	1	32-7440001 to 32-7540158 incl
	69780-18	D	COVER ASSEMBLY - Instrument panel, lower right, white	1	32-7440001 to 32-7540158 incl
	69780-19	D	COVER ASSEMBLY - Instrument panel, lower right, green	1	32-7440001 to 32-7540158 incl
	69901-02	AN,AO	COVER ASSEMBLY - Instrument panel, lower right	1	
-48	69362-00	AL	* PLACARD - Navigation and instrument lights	1	

When ordering, always specify Part Number, Description and Serial Number of Aircraft

PIPER PARTS CATALOG

Figure and Index Number	Part Number	Code	NOMENCLATURE	No. Req.	SERIAL NUMBERS AFFECTED
34-49	69545-00	D	PLACARD - Alternate air	1	32-40566 to 32-7340201 incl.
-50	69544-00	C	PLACARD - Carburetor heat	1	32-1111 to 32-7300076 incl.
-51	99667-02	P	COVER ASSEMBLY - Circuit breaker panel, red	1	
	99667-03	P	COVER ASSEMBLY - Circuit breaker panel, blue/green	1	
	99667-04	P	COVER ASSEMBLY - Circuit breaker panel, tan	1	
	99667-05	P	COVER ASSEMBLY - Circuit breaker panel, black	1	
	99667-06	P	COVER ASSEMBLY - Circuit breaker panel, white	1	
	99667-07	P	COVER ASSEMBLY - Circuit breaker panel, green	1	
	69571-02	AM	COVER ASSEMBLY - Circuit breaker panel, red	1	
	69571-03	AM	COVER ASSEMBLY - Circuit breaker panel, blue/green	1	
	69571-04	AM	COVER ASSEMBLY - Circuit breaker panel, tan	1	
	69571-05	AM	COVER ASSEMBLY - Circuit breaker panel, black	1	
	69571-06	AM	COVER ASSEMBLY - Circuit breaker panel, white	1	
	69571-07	AM	COVER ASSEMBLY - Circuit breaker panel, green	1	
-52	65795-00		DOUBLER - Electric turn and bank mounting	1	
-53	63766-00	L	COVER ASSEMBLY - Radio opening, 6.44 x 1.78, black	2	
	99062-00	S	COVER ASSEMBLY - Radio opening, 6.44 x 1.78, black	2	
	99062-04	P	COVER ASSEMBLY - Radio opening, 6.44 x 1.78, tan	2	
	99062-06	K,N	COVER ASSEMBLY - Radio opening, 6.44 x 1.78	2	
-54	62943-00	L	COVER ASSEMBLY - Radio opening, 6.56 x 3.25, black	1	
	99060-00	S	COVER ASSEMBLY - Radio opening, 6.56 x 3.25, black	1	
	99060-04	P	COVER ASSEMBLY - Radio opening, 6.56 x 3.25, tan	1	
	99060-06	K,N	COVER ASSEMBLY - Radio opening, 6.56 x 3.25	1	
	69518-00	O	COVER ASSEMBLY - Radio opening, 6.50 x .60, black	1	
	69518-04	P	COVER ASSEMBLY - Radio opening, 6.50 x .60, tan	1	
	69518-06	K,N	COVER ASSEMBLY - Radio opening, 6.50 x .60	1	
-55	62942-00	L	COVER ASSEMBLY - Radio opening, 6.56 x 2.90, black	1	
	99059-00	S	COVER ASSEMBLY - Radio opening, 6.56 x 2.90, black	1	
	99059-04	P	COVER ASSEMBLY - Radio opening, 6.56 x 2.90, tan	1	
	99060-06	K,N	COVER ASSEMBLY - Radio opening, 6.56 x 3.25	1	
-56	62944-00	L	COVER ASSEMBLY - Radio opening, 6.56 x 3.56, black	1	
	99061-00	S	COVER ASSEMBLY - Radio opening, 6.56 x 3.56, black	1	
	99061-04	P	COVER ASSEMBLY - Radio opening, 6.56 x 3.56, tan	1	
	99061-06	K,N	COVER ASSEMBLY - Radio opening, 6.56 x 3.56	1	
-57	62943-00	L	COVER ASSEMBLY - Radio opening, 6.56 x 3.25, black	1	
	99060-00	S	COVER ASSEMBLY - Radio opening, 6.56 x 3.25, black	1	
	99060-04	P	COVER ASSEMBLY - Radio opening, 6.56 x 3.25, tan	1	
	99061-06	K,N	COVER ASSEMBLY - Radio opening, 6.56 x 3.56	1	
	69518-00	O	COVER ASSEMBLY - Radio opening, 6.50 x .60, black	1	
	69518-04	P	COVER ASSEMBLY - Radio opening, 6.50 x .60, tan	1	
	69518-06	K,N	COVER ASSEMBLY - Radio opening, 6.50 x .60	1	
	99064-00	S,AP	COVER ASSEMBLY - Radio opening, 6.50 x 3.80, black	1	
	99064-04	P,AP	COVER ASSEMBLY - Radio opening, 6.50 x 3.80, tan	1	
	99064-06	K,N,AP	COVER ASSEMBLY - Radio opening, 6.50 x 3.80	1	
-58	69472-00	AS	CHANNEL - Instrument panel, center	1	
	78114-00	M	CHANNEL - Instrument panel, center	1	
-59	69336-02	L	RETAINER - Instrument panel cover	1	
	99431-00	AT	RETAINER - Instrument panel cover	1	
-60	69543-00	AT	STIFFENER - Instrument panel cover	1	
-61	79314-00	A	SPACER - Air temperature gauge, inner	1	
	79314-02	A	SPACER - Air temperature gauge, outer	1	
-62	548 798	C,D,CA	GAUGE - Cylinder head temperature (87365-02)	1	
	687 264	CA	GAUGE - Cylinder head temperature	1	
-63	553 673	CA	SENDER - Cylinder head temperature	1	

PIPER PARTS CATALOG

Figure and Index Number	Part Number	Code	NOMENCLATURE	No. Req.	SERIAL NUMBERS AFFECTED
34-64	69303-00	L	STIFFENER - Instrument panel	1	
	99227-00	AG	STIFFENER - Instrument panel	1	
	37489-00	R	STIFFENER - Instrument panel	1	
-65	99670-00	AR	SPRING - Circuit breaker panel	1	
-66	67128-00		ANGLE - Instrument panel, left center	1	
	69315-00	AA	ANGLE - Instrument panel, right center	1	
	37380-00	R	ANGLE - Instrument panel, right center	1	
-67	69569-00	N,AQ	CHANNEL ASSEMBLY - Shin guard, left	1	
-68	69570-00	N,AQ	CHANNEL ASSEMBLY - Shin guard, right	1	
-69	78109-00	Q	SHIELD ASSEMBLY - Glare, black	1	
	78109-04	AE	SHIELD ASSEMBLY - Glare, black	1	
-70	69676-00	AU	SUPPORT ASSEMBLY - Compass	1	
-71	690-817	BZ	PLUG - (710-1131)	2	
-72	36660-02		INDICATOR - Engine hour meter	1	
-73	79600-00	J,AX	HOUSING ASSEMBLY - Compass	1	
-74	69669-71	BC	PLACARD - Gear "UP-DOWN," mph	1	
	69669-91	BC	PLACARD - Gear "UP-DOWN," knots	1	
	69669-133	BD	PLACARD - Gear "UP-DOWN," knots	1	
-75	69669-83	BC	PLACARD - Rough air or maneuvering, mph	1	
	69669-37	BC	PLACARD - Rough air or maneuvering, knots	1	
	69669-136	BD	PLACARD - Maneuvering speed, knots	1	
	69353-00	BA	PLACARD - Maneuvering speed, mph	1	
	69664-00	BA	PLACARD - Maneuvering speed, knots	1	
	69669-137	AZ	PLACARD - Maneuvering speed, knots	1	
-76	69669-72	BC	PLACARD - Crosswind, mph	1	
	69669-73	BD	PLACARD - Crosswind, knots	1	
	69354-00	BA	PLACARD - Crosswind, mph	1	
	69665-00	R	PLACARD - Crosswind, knots	1	
-77	95978-00	BC	PLACARD - Gear "UP-DOWN," mph	1	
	69669-52	BC	PLACARD - Gear "UP-DOWN," knots	1	
	69669-172	BD	PLACARD - Gear "UP-DOWN," knots	1	
-78	96602-00	G	PLACARD - Warning, strobe light	1	
	69669-175	C,D	PLACARD - Warning, strobe light	1	
-79	69669-21	Y	PLACARD - Navigation and instrument lights	1	
-80	69544-00	C	PLACARD - Carburetor heat	1	32-7400001 and up
-81	69545-00	AW	PLACARD - Alternate air	1	
-82	35669-165	D	PLACARD - Caution	1	32-7940254 and up
-83	69669-181	G,BG	PLACARD - Reduce power	1	
-84	35669-14	BH,CB	PLACARD - warning, fuel	1	
-85	99214-00		PLATE - Instrument support	AR	
-86	459 849	D	FIRE EXTINGUISHER - (HA1014-01)	1	32-7940002 and up
-87	35680-05	D	BRACKET ASSEMBLY - Fire extinguisher	1	32-7940002 and up
-88	35680-06	D	BRACKET ASSEMBLY - Fire extinguisher	1	32-7940002 and up
-89	35680-26	D	BRACKET ASSEMBLY - Fire extinguisher	1	32-7940002 and up
-90	35680-12	D	BRACKET ASSEMBLY - Fire extinguisher	1	32-7940002 and up
-91	35680-11	D	* TAB ASSEMBLY - Fire extinguisher	1	32-7940002 and up
-92	35680-22		* BRACKET - Fire extinguisher	1	32-7940002 and up
-93	35680-15	D	BRACE - Fire extinguisher	1	32-7940002 and up
-94	35680-16	D	BRACE - Fire extinguisher	1	32-7940002 and up

When ordering, always specify Part Number, Description, and Serial Number of Aircraft

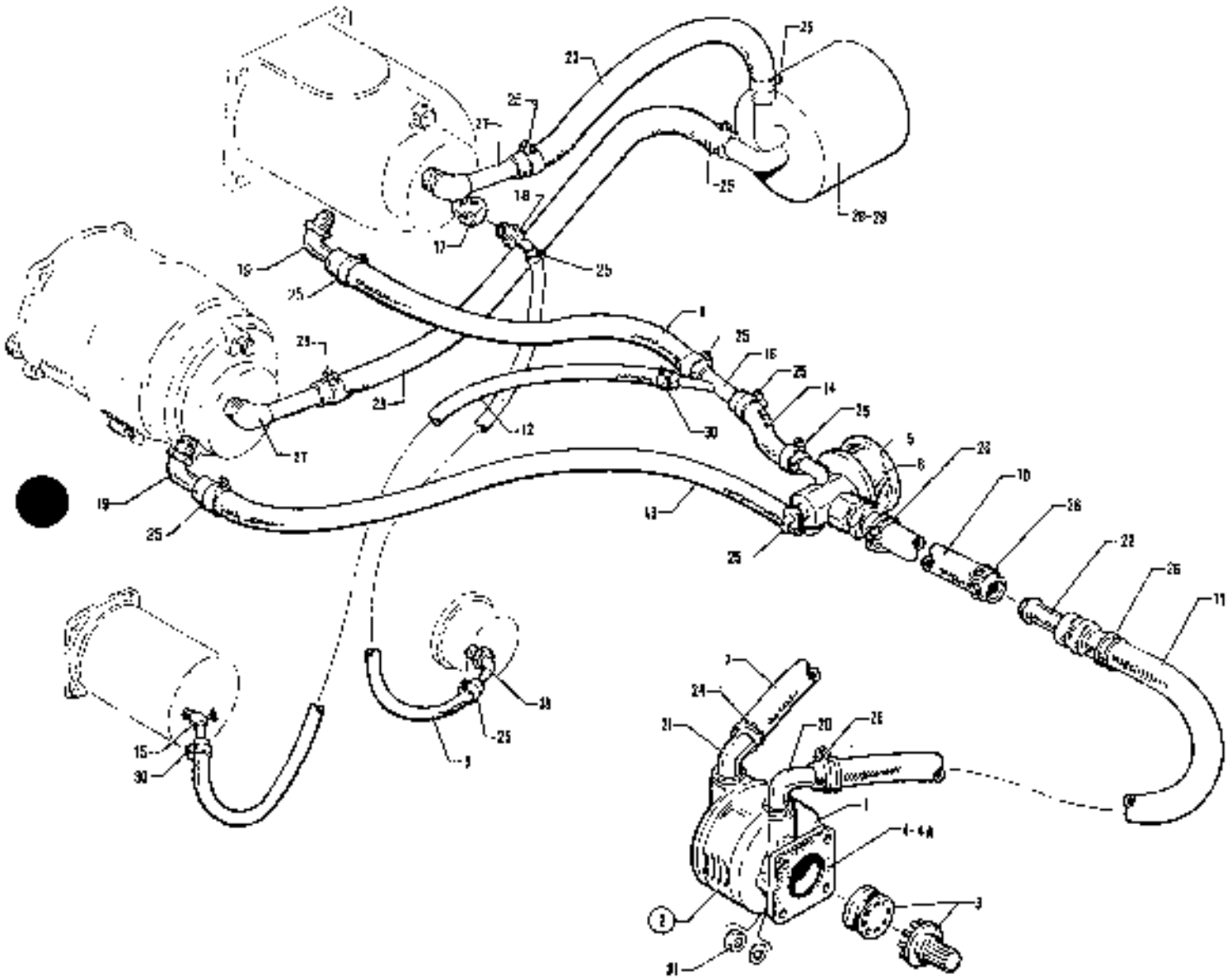

Figure 39 Vacuum System Installation
(PA-32-260 - Serial Nos. 32-1 to 32-896 inclusive)
(PA-32-300 - Serial Nos. 32-40000 to 32-40292 inclusive)

CODE EXPLANATIONS FOR FIGURE 35

A - Used on PA-32-260 with serial numbers 32-1 to 32-896 inclusive, and PA-32-300 with serial numbers 32-40000 to 32-40292 incl. Note: Refer to Figure 36 if AltiMatic III or AutoControl III is installed.
B - Used when vacuum turn and bank is installed.
C - Used when electric turn and bank is installed.
D - Used on PA-32-260 with serial numbers 32-451 to 32-896 inclusive, and PA-32-300 with serial numbers 32-40000 to 32-40292 incl.
E - Used with Vacuum Pump P/N 26749-07 (Airborne 211CC) only.
F - Used with Vacuum Pump P/N 36535-02 (Edo-Aire 1U128-200) only.
G - Reference latest revision to Piper Service Bulletin 1041, applicable to PA-32-260 with serial numbers 32-1 to 32-7800008 and PA-32-300/32S-300 with serial numbers 32-40000 to 32-7940290. The gyro vacuum/pressure system may become contaminated by loose particles originating from the air filter element.
H - Reference latest revision to Piper Service Bulletin 1026 with distribution of Parker Hannifin Airbourne Service Letter 48 for the inspection replacement of dry air pump flexible couplings.

PIPER PARTS CATALOG

Figure and Index Number	Part Number	Code	NOMENCLATURE	No. Req.	SERIAL NUMBERS AFFECTED
35-	68702		DRAWING - Vacuum System Installation		32-1 to 32-450 inclusive
	68390	D	DRAWING - Vacuum System Installation		
-1	754 575		KIT - Vacuum pump drive (79005)	1	
-2	26749-07		PUMP - Dry vacuum (Airborne 211CC)	1	
	36535-02		PUMP - Dry vacuum (Edo-Aire 1U128-200)	1	
-3	753 910	E,H	* COUPLING ASSEMBLY KIT - Vacuum pump drive (no. 350)	1	
-4	751 859	E	* * GASKET - Vacuum pump mtg (B3-1-2)	1	
-4a	462 023	F	* GASKET - Vacuum pump mounting (AN4045-1)	1	
-5	492 065		VALVE - Suction regulating (133A4)	1	
-6	751 815		* FILTER - Regulating valve (B3-5-1)	1	
-7	63904-29		HOSE - Vacuum pump exhaust	1	
-8	63913-52	B	HOSE - Directional gyro to "Y" fitting	1	
	63913-55	C	HOSE - Directional gyro to regulator valve	1	
-9	63913-54		HOSE - Directional gyro to suction gauge	1	32-1 to 32-450 inclusive
	63913-62	D	HOSE - Directional gyro to suction gauge	1	
-10	63913-42		HOSE - Regulator valve to firewall fitting	1	
-11	63913-42		HOSE - Vacuum pump to firewall fitting	1	
-12	63913-51	B	HOSE - Turn and bank indicator to "Y" fitting	1	32-1 to 32-450 inclusive
-13	63913-55		HOSE - Regulator valve to gyro horizon	1	
-14	63913-05	B	HOSE - Regulator valve to "Y" fitting	1	
-15	63082-00	B	VALVE ASSEMBLY - Air regulating	1	32-1 to 32-450 inclusive
-16	63212-04		FITTING ASSEMBLY - Vacuum hose "Y"	1	32-1 to 32-450 inclusive
-17	453 616		REDUCER - (AN912-1D)	1	
-18	458 948		ELBOW - (1K1-2-4)	2	
-19	458 945		ELBOW - (1K1-4-6)	2	
-20	458 958		ELBOW - (1K1-6-10)	1	
-21	558 900		ELBOW - (1K8-6-8)	1	
-22	460 807		FITTING - (1K22-10-10)	1	
-23	63913-58	D	HOSE - Gyros to air filter	2	
-24	554 985		CLAMP - Hose (SAE 11)	1	
-25	554 888		CLAMP - Hose (GS-6)	8	
-26	454 837		CLAMP - Hose (H78000)	4	
-27	458 941	D	ELBOW - (AN844-6D)	2	
-28	460 888	D	FILTER ASSEMBLY - Gyro air (66673-00)	1	
-29	757 899	D,G	* CARTRIDGE - Air filter (D9-18-1)	1	
-30	554 861		CLAMP - Hose (SAE TY F-4)	2	
-31	404 004		NUT - (PS10024-420)	4	
	407 565		WASHER - (AN960-416	4	

When ordering, always specify Part Number, Description, and Serial Number of Aircraft

1J23 THRU 1J24

INTENTIONALLY LEFT BLANK

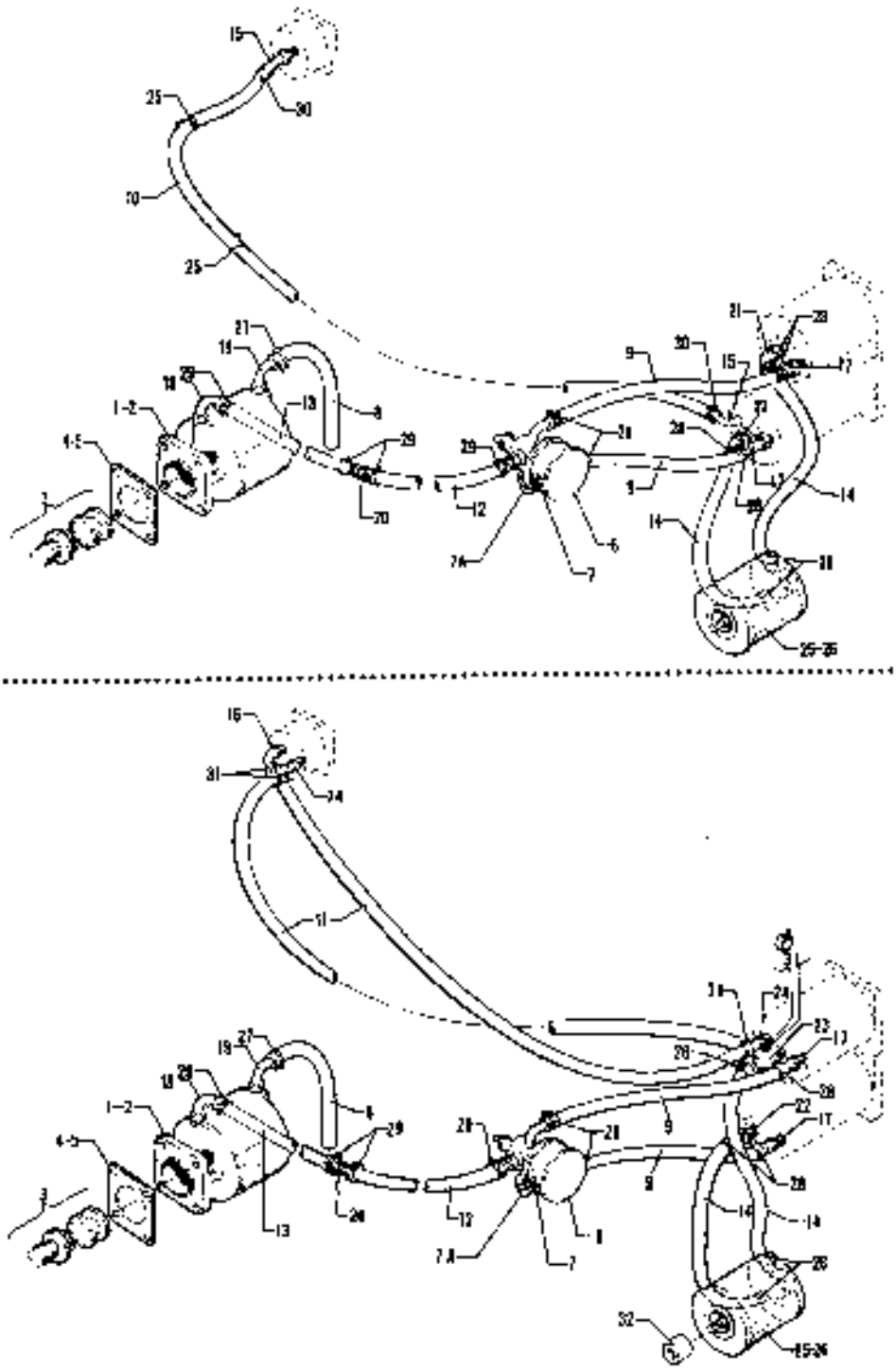

Figure 36 Vacuum System Installation
(PA-32-260 - Serial Nos 32-997 and up)
(PA-32-300 - Serial Nos 32-40293 and up)
(PA-32R-300 - Serial Nos 32R-7680001 and up)

CODE EXPLANATIONS FOR FIGURE 36

A - Used on PA-32-260 with serial numbers 32-897 and up, PA-32-300 with serial numbers 32-40293 and up, and PA-32R-300.
B - Used on PA-32-260 with serial numbers 32-897 to 32-1110 inclusive, and PA-32-300 with serial numbers 32-40293 to 32-40565 incl.
C - Used on PA-32-260 with serial numbers 32-1111 to 32-1320 inclusive, and PA-32-300 with serial numbers 32-40566 to 32-41018 incl.
D - Used on PA-32-260 with serial numbers 32-7100001 and up, PA-32-300 with serial numbers 32-7140001 and up, and PA-32R-300.
E - Used on PA-32-260 with serial numbers 32-451 to 32-896 inclusive, and PA-32-300 with serial numbers 32-40000 to 32-40292 inclusive if AltiMatic III or AutoControl III is installed.
F - Used on PA-32-260 with serial numbers 32-1111 and up, PA-32-300 with serial numbers 32-40566 and up, and PA-32R-300.
G - Used on PA-32-260 with serial numbers 32-897 to 32-1320 inclusive, and PA-32-300 with serial numbers 32-40293 to 32-41018 incl.
H - Used on PA-32-260 with serial numbers 32-897 to 32-7400061 inclusive, and PA-32-300 with serial numbers 32-40293 to 32-744182 incl.
J - Used on PA-32-260 with serial numbers 32-7500001 and up, PA-32-300 with serial numbers 32-7540001 and up, and PA-32R-300.
K - Used with Vacuum Pump P/N 26749-07 (Airborne 211CC) only.
L - Used with Vacuum Pump P/N 36535-02 (Edo-Aire 1U128-002) only.
M - See Figure 122 if radar system is installed.
N - Reference latest revision to Piper Service Bulletin 1041, applicable to PA-32-260 with serial numbers 32-1 to 32-7800008 and PA-32-300/32S-300 with serial numbers 32-40000 to 32-7940290. The gyro vacuum/pressure system may become contaminated by loose particles originating from the air filter element.
P - Reference latest revision to Piper Service Bulletin 1026 with distribution of Parker Hannifin Airbourne Service Letter 48 for the inspection replacement of dry air pump flexible couplings.

PIPER PARTS CATALOG

Figure and Index Number	Part Number	Code	NOMENCLATURE	No. Req.	SERIAL NUMBERS AFFECTED
36-	68391	B,E	DRAWING - Vacuum System Installation		
	69370	F	DRAWING - Vacuum System Installation		
-1	754 575		KIT - Vacuum pump drive (79005)	1	
-2	26749-07		PUMP - Dry vacuum (Airborne 211CC)	1	
	36535-02		PUMP - Dry vacuum (Edo-Aire 1U128-002)	1	
-3	753 910	K,P	* COUPLING ASSEMBLY KIT - Vacuum pump drive (No. 350)	1	
-4	751 859	K	* * GASKET - Vacuum pump mounting (B3-1-2)	1	
-5	462 023	L	* GASKET - Vacuum pump mounting (AN4045-1)	1	
-6	492 065	H	VALVE - Suction regulating (133A4)	1	
	492 240	J	VALVE - Suction regulating (2H3-19)	1	
-7	751 815		* FILTER - Regulating valve (B3-5-1)	1	
-7a	757 790	J	* SWITCH - (F7-16-1)	1	
-8	63904-29	M	HOSE - Vacuum pump exhaust	1	
-9	63913-55		HOSE - Gyros to regulator valve	2	
-10	63913-62	B	HOSE - Directional gyro to suction gauge	1	
	63913-71	C	HOSE - Directional gyro to suction gauge	1	
-11	63913-71	D	HOSE - Gyro horizon to suction gauge	2	
-12	63913-42		HOSE - Regulator valve to firewall fitting	1	
-13	63913-42		HOSE - Vacuum pump to firewall fitting	1	
-14	63913-58	B	HOSE - Gyros to air filter	2	
	63913-07	F	HOSE - Gyros to air filter	2	
-15	458 948	G	ELBOW - (1K1-2-4)	2	
-16	458 948	D	ELBOW - (1K1-2-4)	1	
-17	451 939		ADAPTER - (1K10-4-6)	2	
-18	458 958		ELBOW - (1K1-6-10)	1	
-19	558 900	M	ELBOW - (1K8-6-8)	1	
-20	460 807		FITTING - (1K22-10-10)	1	
-21	558 912	G	ELBOW - (1K9-4-6)	2	
-22	558 912	D	ELBOW - (1K9-4-6)	1	
-23	460 836	D	FITTING - (1K31-4-6-4)	1	
-24	451 881	D	ADAPTER - (1K10-2-4)	2	
-25	460 888		FILTER ASSEMBLY - Gyro air (66673-00)	1	
-26	757 899	N	* CARTRIDGE - Air filter (D9-18-1)	1	
-27	554 985		CLAMP - Hose (SAE-11)	1	
-28	554 888		CLAMP - Hose (GS-6)	8	
-29	554 793		CLAMP - Hose (SAE TY F-8)	4	
-30	554 861	G	CLAMP - Hose (SAE TY F-4)	2	
-31	554 861	D	CLAMP - Hose (SAE TY F-4)	4	
-32	63900-146	F	SPACER - Air filter	1	

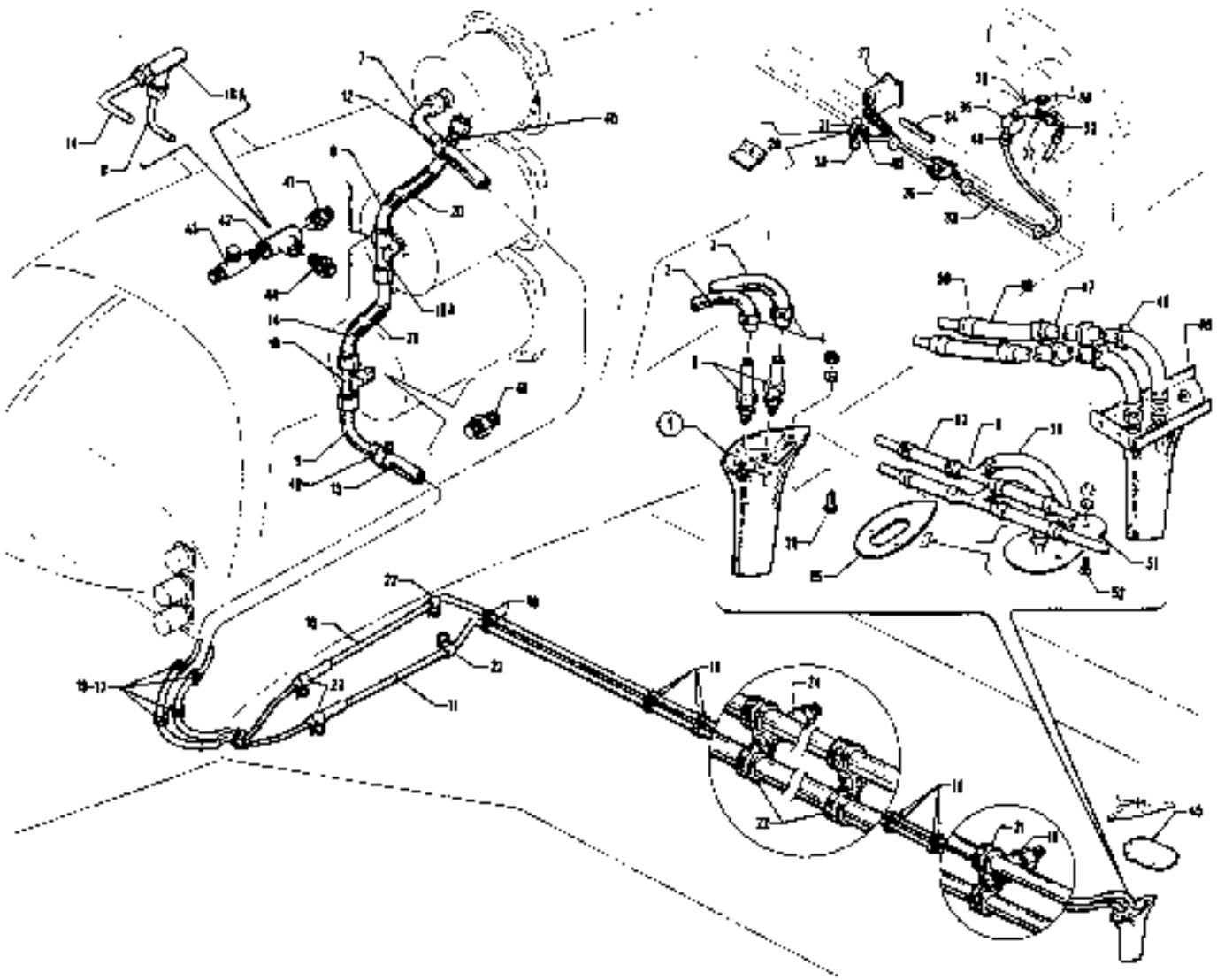

Figure 37 Pitot Static System Installation

CODE EXPLANATIONS FOR FIGURE 37

A - Used on PA-32S-300 Seaplane Model only.
B - Used on PA-32-260 with serial numbers 32-1111 and up, PA-32-300 with serial numbers 32-40566 to 32-7840222 incl.
C - Used on PA-32-260 with serial numbers 32-1 to 32-1111 inclusive, and PA-32-300 with serial numbers 32-40000 to 32-40565 incl.
D - Used if encoding altimeter is installed.
E - Used on PA-32-260 with serial numbers 32-1111 and up, PA-32-300 with serial numbers 32-405666 and up, and PA-32R-300.
F - Used on PA-32R-300 with serial numbers 32R-7680001 and up, and PA-32-300 with serial numbers 32-7940001 and up.
G - Used on PA-32S-300 Seaplanes with serial numbers 32-40566 to 32-7240147 inclusive, and PA-32R-300.
H - Used on PA-32-260 with serial numbers 32-7300001 and up, and PA-32-300 with serial numbers 32-7340001 and up and PA-32R-300.
J - Used on PA-32-260 and PA-32-300 only.
K - Refer to Figure 119 if Altimatic IIIC is installed.
L - Refer to Figure 113 if Electric Trim Stop Sensor is installed.
M - Used if unheated pitot head is installed.
N - Used if heated pitot head is installed.
O - Reference latest revision to Piper Service Bulletin 524, applicable to PA-32-300 with serial numbers 32-7640001 to 32-7640108 incl, and PA-32R-300 with serial numbers 32R-7680001 to 32R-7680406 incl. There is improved hardware available to keep the alternate air box valve pivot bolt from coming loose.

PIPER PARTS CATALOG

Figure and Index Number	Part Number	Code	NOMENCLATURE	No. Req.	SERIAL NUMBERS AFFECTED
37-	68114	C	DRAWING - Pitot Static System Installation		
	69046	C	DRAWING - Heated Pitot Static System Installation		
	69367	B	DRAWING - Pitot Static System Installation (Heated or unheated)		
	38122	F	DRAWING - Pitot Static System Installation		
	67477	F	DRAWING - Heated Pitot Static and Heated Pressure Head Installation		
	68840	C	DRAWING - Alternate Static System Installation		
	67479	E	DRAWING - Alternate Static System Installation		
-1	65797-05		HEAD ASSEMBLY - Pitot (unheated)	1	
	69041-05		HEAD ASSEMBLY - Pitot (heated)	1	
-2	63913-34		* HOSE - Pitot	1	
-3	63913-37		* HOSE - Static	1	
-4	488 722		* TIE - Cable (MS3367-4-9)	2	
-5	556 105		* CONNECTOR - (W/H 1068 x 4) Heated pitot head	2	
-6	69547-00	A	TEE ASSEMBLY - Pitot static system	2	32S-40566 to 32S-7240147 incl.
-7	63207-00		TUBE ASSEMBLY - Airspeed static	1	
-8	63209-00	B	TUBE ASSEMBLY - Static (fittings on both ends)	1	
	63211-00	F	TUBE ASSEMBLY - Static (fittings on one end)	2	
-9	63211-00		TUBE ASSEMBLY - Static	1	
-10	68115-00		TUBE ASSEMBLY - Static	1	
-11	68116-00		TUBE ASSEMBLY - Pitot	1	
-12	63913-32	L	HOSE - Pitot	1	
-13	63913-35	C	HOSE - Static	1	
	63913-59	E	HOSE - Static	1	
-14	62317-00		TUBE ASSEMBLY - Static (fittings on both ends)	1	
	63211-00		TUBE ASSEMBLY - Static (fittings on one end)	2	
-15	63900-25		BUSHING	1	
	63900-70	A	BUSHING	1	32S-40000 to 32S-7240147 incl.
-16	488 380		TEE - (AN825-3D)	1	
-16a	488 380		TEE - (AN825-3D)	1	
	488 310	D	TEE - (AN826-3D)	1	
-17	434 136	B	GROMMET - (AN931-9-13)	4	
-18	434 128		GROMMET - (MS35489-6)	10	
-19	434 130	F	GROMMET - (MS35489-13)	2	
-20	63913-56		HOSE - Tube connector	2	
-21	454 929		CLAMP - (PS10017-2-4)	2	
-22	454 928		CLAMP - (PS10017-2-3)	8	
-23	454 933		CLAMP - (PS10017-2-8)	2	
-24	63900-137	F	BUSHING	1	
-25	69042-02		GASKET - Rubber, unheated pitot head	1	
	69042-00		GASKET - Asbestos, heated pitot head	1	
-26	99377-04		SWITCH - Heated pitot	1	
-27	454 658	C	CIRCUIT PROTECTOR - Pitot switch (109-215-102)	1	
	454 708	B	CIRCUIT PROTECTOR - Pitot switch (1600-041-01508)	1	
	454 709	F	CIRCUIT PROTECTOR - Pitot switch and pressure head (1600-041-02008)	1	
-28	78113-00	H	CLIP ASSEMBLY - Alternate static valve	1	
-29	415 514	N	SCREW - (MS35206-234)	3	
	415 522	M	SCREW - (MS35206-232)	3	
	407 562		WASHER - (AN960-6)	3	
	494 108	N	WASHER - (PS10063-3)	3	
	404 909		NUT - (MS20365-632C)	3	
-30	492 100	O	VALVE ASSEMBLY - Alternate air (CCA-7450)	1	
	401 343	O	BOLT - (AN4-53)	1	
	424 052	O	COTTER PIN - (MS24665-134)	1	
	404 101		NUT - (AN310-4)	1	

When ordering, always specify Part Number, Description, and Serial Number of Aircraft

PIPER PARTS CATALOG

Figure and Index Number	Part Number	Code	NOMENCLATURE	No. Req.	SERIAL NUMBERS AFFECTED
37-31	25290-00	W	BRACKET ASSEMBLY - Alternate air valve	1	
-32	63211-00	C	TUBE ASSEMBLY - Alternate air	1	
	456 948	B,F,W	ELBOW - Alternate air (1K1-2-4)	1	
-33	63913-26	C,J	HOSE - Alternate air	1	
	63913-70	B,F,K	HOSE - Alternate air	1	
-34	67768-00		PLACARD - Alternate air	1	
-35	63913-34	G	HOSE - Pitot static system (11.50")	1	
	63913-37	A	HOSE - Pitot static system (12.25")	1	32S-40586 to 32S-7240147 incl.
-36	466 948	C,W	ELBOW - Alternate air (1K1-2-4)	1	
-37	476 847	W	NIPPLE - Alternate air (AN816-3D)	1	
-38	476 843	W	NIPPLE - Alternate air (AN911-1D)	1	
-39	466 474	W	TEE - Alternate air (AN917-1D)	1	
-40	564 861	C,W	CLAMP - (SAE TY F-4)	10	
-41	476 843	C,W	NIPPLE - (AN811-1D)	2	
-42	466 474	C,W	TEE - (AN917-1D)	1	
-43	466 310	C,W	TEE - (AN826-3D)	1	
-44	476 847	C,W	NIPPLE - (AN816-3D)	1	
-45	63366-00	A	GASKET - Wing	1	32S-40000 to 32S-7240147 incl
-46	63161-02	A,W	HOSE - Pitot static system	2	32S-40000 to 32S-40565 incl.
-47	66165-26	A	TUBE - Pitot static system	2	32S-40000 to 32S-7240147 incl
-48	63466-00	A	DOUBLER - Pitot static head	1	32S-40000 to 32S-40565 incl.
	63466-02	A	DOUBLER - Pitot static head	1	32S-40566 and up
-49	434 128	A,W	GROMMET - (MS35489-6)	4	32S-40000 to 32S-7240147 incl
-50	564 861	A,W	CLAMP - (SAE TY F-4)	12	32S-40000 to 32S-7240147 incl
-51	62246-07	A	COVER - Pitot head replacement	1	32S-40000 to 32S-40565 incl.
	69646-00	A	COVER ASSEMBLY - Pitot head replacement	1	32S-40566 to 32S-7240147 incl
-52	415 148	A,W	SCREW - (AN526-632R6)	3	32S-40000 to 32S-7240147 incl
	407 662	A,W	WASHER - (AN960-6)	3	32S-40000 to 32S-40565 incl.
	404 909	A,W	NUT - (MS20365-632C)	2	32S-40000 to 32S-40565 incl
-53	63161-03	A,W	HOSE - Pitot static system	4	32S-40566 to 32S-7240147

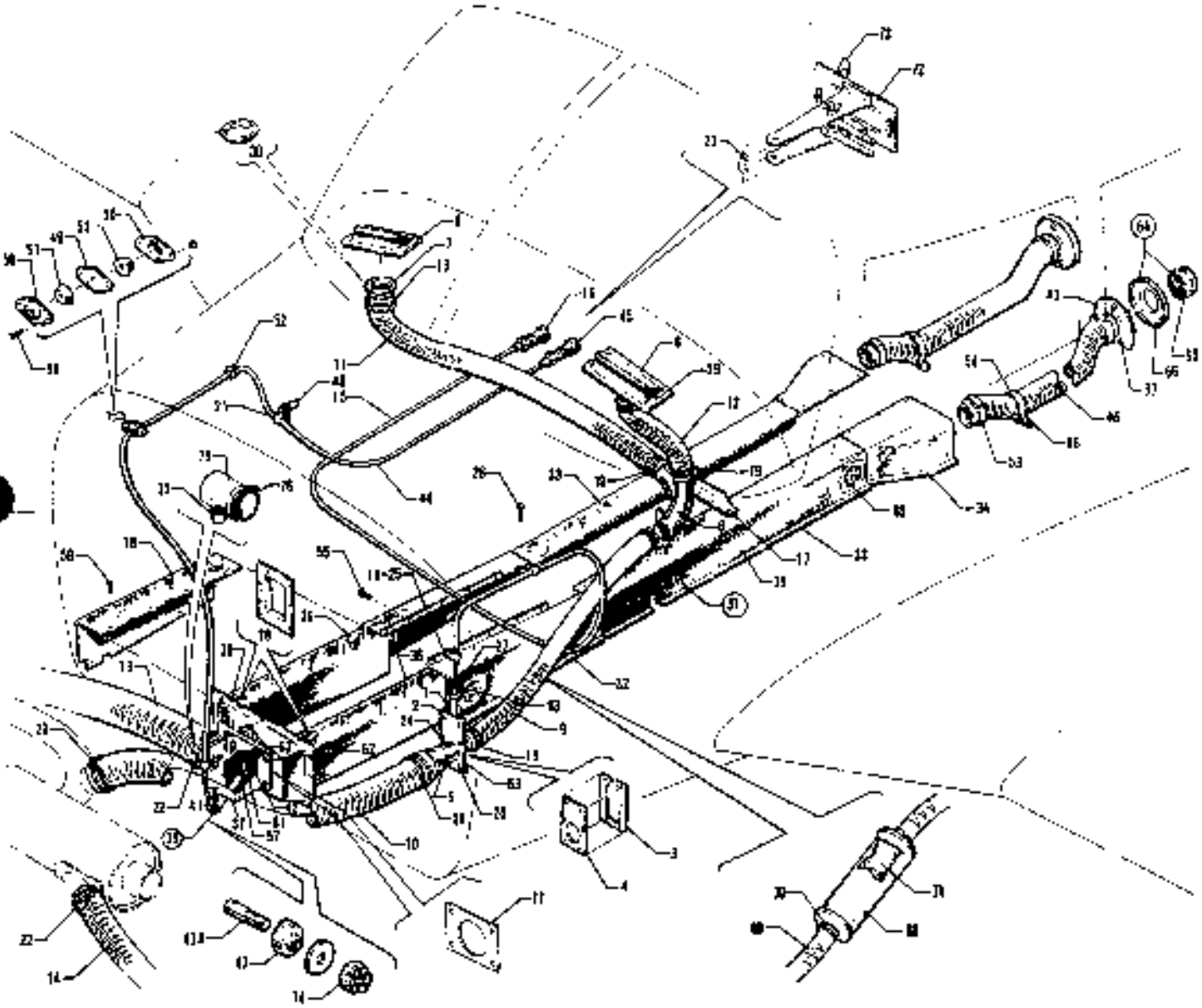

Figure 38 Cabin Heat and Defroster System

CODE EXPLANATIONS FOR FIGURE 38

A - Used on PA-32-260 only.
B - Used on PA-32-300 only.
C - Used on PA-32-260 with serial numbers 32-1111 and up, and PA-32-300 with serial numbers 32-40000 to 32-7540198 incl.
D - Used on PA-32S-300 Seaplane Model only.
E - Used on PA-32-260 with serial numbers 32-1 to 32-926 inclusive, and PA-32-300 with serial numbers 32-40000 to 32-40311 incl.
F - Used on PA-32-260 with serial numbers 32-1 to 32-1110 inclusive, and PA-32-300 with serial numbers 32-40000 to 32-40565 incl.
G - Used on PA-32-260 with serial numbers 32-1111 and up, and PA-32-300 with serial numbers 32-40566 and up.
H - Used on PA-32-260 with serial numbers 32-1 to 32-1200 inclusive, and PA-32-300 with serial numbers 32-40000 to 32-40780 incl.
J - Used on PA-32-260 with serial numbers 32-1201 and up, and PA-32-300 with serial numbers 32-40781 and up.
K - Used on PA-32-260 with serial numbers 32-1111 to 32-1320 inclusive, and PA-32-300 with serial numbers 32-40566 to 32-41018 incl.
L - Used on PA-32-260 with serial numbers 32-1 to 32-1320 inclusive, and PA-32-300 with serial numbers 32-40000 to 32-41018 incl.
M - Used on PA-32-260 with serial numbers 32-1 to 32-1110 inclusive, and PA-32-300 with serial numbers 32-40000 to 32-40515 incl.
N - Used on PA-32-260 with serial numbers 32-1111 and up, and PA-32-300 with serial numbers 32-40516 and up.
O - Used on PA-32-260 with serial numbers 32-7100001 and up, and PA-32-300 with serial numbers 32-7140001 and up.
P - Used on PA-32-260 with serial numbers 32-927 and up, and PA-32-300 with serial numbers 32-40312 and up.
Q - Used on PA-32-260 with serial numbers 32-1111 to 32-1250 inclusive, and PA-32-300 with serial numbers 32-40566 to 32-40850 incl.
R - Used on PA-32-260 with serial numbers 32-1251 and up, and PA-32-300 with serial numbers 32-40851 and up.
S - Used on PA-32-260 with serial numbers 32-601 and up, and PA-32-300 with serial numbers 32-400000 to 32-7540198 incl.
T - Used on PA-32-260 with serial numbers 32-1 and up, and PA-32-300 with serial numbers 32-40000 to 32-7540198 incl.
U - Used on PA-32-260 with serial numbers 32-7100001 and up. and PA-32-300 with serial numbers 32-7140001 to 32-7940151 incl.
V - Reference latest revision to Service Letter 864, Part II, applicable to PA-32-260 with serial numbers 32-1111 to 32-7800008 incl., and PA-32-300 with serial numbers 32-40566 to 32-7940001 incl. Modification Kit P/N 763-870 uses a serrated type position retainer which more effectively holds the control lever in any set position.

PIPER PARTS CATALOG

Figure and Index Number	Part Number	Code	NOMENCLATURE	No. Req.	SERIAL NUMBERS AFFECTED
38-	68900	A	DRAWING - Defroster System Installation		32-1 to 32-1110 inclusive
	69455	A	DRAWING - Defroster System Installation		32-1111 and up
	69020	B	DRAWING - Defroster System Installation		32-40000 to 32-40665 inclusive
	69456	B	DRAWING - Defroster System Installation		32-40666 and up
	69457	D	DRAWING - Defroster System Installation		
	68915	F	DRAWING - Cabin Heat System Installation		
	69454	G	DRAWING - Cabin Heat System Installation		
-1	68903-00		VALVE - Defroster	1	
-2	68905-00		PLATE ASSEMBLY - Defroster air inlet	2	32-1 to 32-600 inclusive
	68905-00		PLATE ASSEMBLY - Defroster air inlet, front	1	32-601 and up
	68022-00		PLATE ASSEMBLY - Defroster air inlet, rear	1	
-3	68902-00		SPACER - Defroster air valve	1	
-4	68907-00		SPACER - Defroster air valve	1	
-5	68909-00		REDUCER ASSEMBLY - Defroster air	1	32-1 to 32-600 inclusive
	69023-00	S	REDUCER ASSEMBLY - Defroster air	1	
-6	68908-00	H	TAKE-OFF ASSEMBLY - Defroster air	1	
	68656-00	J	TAKE-OFF ASSEMBLY - Defroster air	1	
	68908-09	D	TAKE-OFF ASSEMBLY - Defroster air	1	326-40000 to 329-40780 incl.
	68656-04	D	TAKE-OFF ASSEMBLY - Defroster air	1	329-40781 to 329-7240147 incl.
-7	68908-00		OUTLET - Defroster air	2	
-8	65318-00		OUTLET - Defroster air	2	
-9	63633-34	E	HOSE - Defroster air (22")	1	
	63633-22	D	HOSE - Defroster air (15")	2	326-40000 to 329-7240147 incl.
-10	63633-32	A	HOSE - Defroster air	1	32-1 to 32-853 inclusive
	63633-49	A	HOSE - Defroster air	1	32-854 to 32-1110 inclusive
	63633-40	C	HOSE - Defroster air	1	
	63633-162	B	HOSE - Defroster air	1	32-7640001 and up
-11	63633-31	H	HOSE - Defroster air	1	
	63633-55	J	HOSE - Defroster air	1	
-12	63633-30	H	HOSE - Defroster air	1	
	63633-30	D	HOSE - Defroster air	1	326-40000 to 329-40780 incl.
	63633-54	J	HOSE - Defroster air	1	
	63633-56	D	HOSE - Defroster air	1	329-40781 to 329-7240147 incl.
-13	63633-33	A	HOSE - Cabin heat	1	
	63633-42	B	HOSE - Cabin heat	1	
-14	63633-26	A	HOSE - Cabin heat	1	
	63633-41	B	HOSE - Cabin heat	1	
-15	63902-14	F	CONTROL ASSEMBLY - Defroster	1	
	66656-04	G	CABLE ASSEMBLY - Control, defroster	1	
-16	63914-05	F	KNOB - Defroster	1	
-17	68910-00	H	ANGLE - Extruded	1	
-18	63900-27	F	BUSHING - Spacer	1	
	63900-123	G	BUSHING - Spacer	1	
-19	654 896		CLAMP - Hose (H1-1200)	4	
-20	654 837	T	CLAMP - Hose (H2-0000)	2	
	654 896	B	CLAMP - Hose (SAE TY A-1 1/2)	2	32-7640001 and up
-21	654 890	F	CLAMP - Cable (MS122901)	2	
	464 987	G	CLAMP - Cable (A46965-3-1)	2	
-22	454 993		CLAMP - Hose (H3-1180)	4	
-23	63900-124	K	BUSHING - Spacer	1	
-24	415 449	W	SCREW - (AN526-832R-8)	1	
	404 810	W	NUT - (MS20365-832C)	1	
-25	416 997	W	SCREW - (AN526-1032R12)	1	
	404 836	W	NUT - (MS20364-1032C)	1	
	404 987	W	NUT - (MS20365-1032C)	1	

When ordering, always specify Part Number, Description and Serial Number of Aircraft

PIPER PARTS CATALOG

Figure and Index Number	Part Number	Code	NOMENCLATURE	No. Req.	SERIAL NUMBERS AFFECTED
38-26	415 449		SCREW - (AN526-832R-8)	4	
	404 563		WASHER - (AN960-8)	4	
	404 910		NUT - (MS20365-832C)	4	
-27	68904-00		BOLT - Control cable, defroster	1	
	404 836		NUT - (MS20364-428C)	1	
	404 888		NUT - (MS20365-428C)	1	
	407 565		WASHER - (AN960-416)	1	
-28	416 995		SCREW - (AN526-1032R8)	1	
	404 835		NUT - (MS20364-1032C)	1	
	404 887		NUT - (MS20365-1032C)	1	
-29	415 150		SCREW - (AN526-632R10)	4	
	404 562		WASHER - (AN960-6)	4	
	404 909		NUT - (MS20365-632C)	4	
-30	406 427		NUT - (C-13900-014-1)	2	
-31	68923-00		DUCT ASSEMBLY - Cabin heat, left	1	
	68923-01		DUCT ASSEMBLY - Cabin heat, right	1	
-32	68923-02		* DUCT - Cabin heat, left	1	
	68923-03		* DUCT - Cabin heat, right	1	
-33	68923-04		* DUCT - Cabin heat, left	1	
	68923-05		* DUCT - Cabin heat, right	1	
-34	68923-06		* DUCT - Cabin heat, left	1	
	68923-07		* DUCT - Cabin heat, right	1	
-35	487 560		* STUD - (XX 10362-12)	13	
-36	68922-00		DUCT ASSEMBLY - Cabin heat	2	
-37	68919-00		BOX ASSEMBLY - Cabin heat	1	
-38	68916-00		BOX ASSEMBLY - Cabin heat	1	
-39	36558-08	L	LINK - Cabin heat box	1	
	36558-08	U	LINK ASSEMBLY - Cabin heat box	1	
-40	36558-02	B	LINK - Cabin heat box	1	32-7940152 and up
-41	36558-05	B	LINK - Cabin heat box	1	32-7940152 and up
-42	68918-00		LINK - Cabin heat box	1	
-43	68920-00	M	TUBE ASSEMBLY - Cabin heat	2	
	69285-00	N	TUBE - Cabin heat	2	
-44	63902-15	F,V	CONTROL ASSEMBLY - Cabin heat	1	
	554 050	G	CABLE ASSEMBLY - Control, cabin heat (PS50146-4-7)	1	
-45	63914-04	F	* KNOB - Cabin heat	1	
-46	63633-19		HOSE - Air duct	2	
-47	70371-02		FITTING - Cable attachment	1	
-47a	70371-03		STUD - Cable attachment	1	
-48	80022-67	F	SPACER - Cable attachment	1	
-49	22105-03		GASKET - Control cable, heat	1	
-50	66789-00		PLATE - Control cable, heat	2	
-51	68770-14		GROMMET - Control cable, heat	2	
-52	434 126		GROMMET - (AN931-3-5)	1	
-53	454 994		CLAMP - (H-2-1160)	4	
-54	554 827		CLAMP - (MS21919H34)	4	
-55	419 590		SCREW - (AN530-8R6)	48	
-56	417 695		SCREW - (AN526-C1032-R-10)	4	
	404 263		NUT - (AN315D3R)	4	
	404 887		NUT - (MS20365-1032C)	4	
-57	415 737		SCREW - (AN515-6R6)	2	
	404 909		NUT - (MS20365-632C)	2	

When ordering, always specify Part Number, Description, and Serial Number of Aircraft

PIPER PARTS CATALOG

Figure and Index Number	Part Number	Code	NOMENCLATURE	No. Req.	SERIAL NUMBERS AFFECTED
38-58	417 775	F,W	SCREW - (AN520-10R8)	2	
	415 754	G,W	SCREW - (AN515-8R8)	2	
	404 935	F,W	NUT - (MS20364-1032C)	2	
	404 910	G,W	NUT - (MS20365-832C)	2	
-59	417 771		SCREW - (AN520-10R4)	16	
-60	415 448	W	SCREW - (AN526-8R5)	10	
-61	415 736		SCREW - (AN515-6R5)	1	
	404 908	W	NUT - (MS20365-632C)	1	
-62	415 148	W	SCREW - (AN526-6R6)	4	
63	68933-00		DEFLECTOR ASSEMBLY	4	
-64	68928-00		DEFLECTOR ASSEMBLY	2	
-65	68929-00		* LOUVER ASSEMBLY - Deflector	1	
-66	21166-00	W	* PLATE - Deflector	1	
-67	414 379		SCREW - (440 x 1/2 LI	6	
	404 908	W	NUT - (MS20365-440C)	6	
-68	68207-00	P	SILENCER ASSEMBLY - Defroster	1	
-69	63633-54	P	* HOSE - Defroster silencer	2	
-70	554 696	P	* CLAMP - (H1-1200)	2	
-71	69206-00	P	* FILLER - Defroster	1	
-72	66867-00	K	CONTROL ASSEMBLY - Heat and defroster	1	
	79863-03	O	CONTROL ASSEMBLY - Heat and defroster	1	
-73	22287-00	Q,W	KNOB ASSEMBLY - Heat and defroster	2	
	66960-00	R	KNOB ASSEMBLY - Heat and defroster	2	
-74	81342-18		WASHER - Cable attachment	1	
	404 382	W	NUT - (AN320-3)	1	
	424 051	W	COTTER PIN - (MS24665-132)	1	
-75	39156-00	B	DUCT ASSEMBLY - Defroster take-off	1	32-7664001 and up
-76	554 926	B,W	CLAMP - (SAE TY F-44)	1	32-7664001 and up
-77	38204-03	B	SEAL - Cabin heat box	1	32-7640202 and up
-78	68927-00		COVER - Heat duct, left	1	
	68927-01		COVER - Heat duct, right	1	
-79	68924-00		FLANGE - Cabin heat, left	1	
	68924-01		FLANGE - Cabin heat, right	1	

When ordering, always specify Part Number, Description and Serial Number of Aircraft

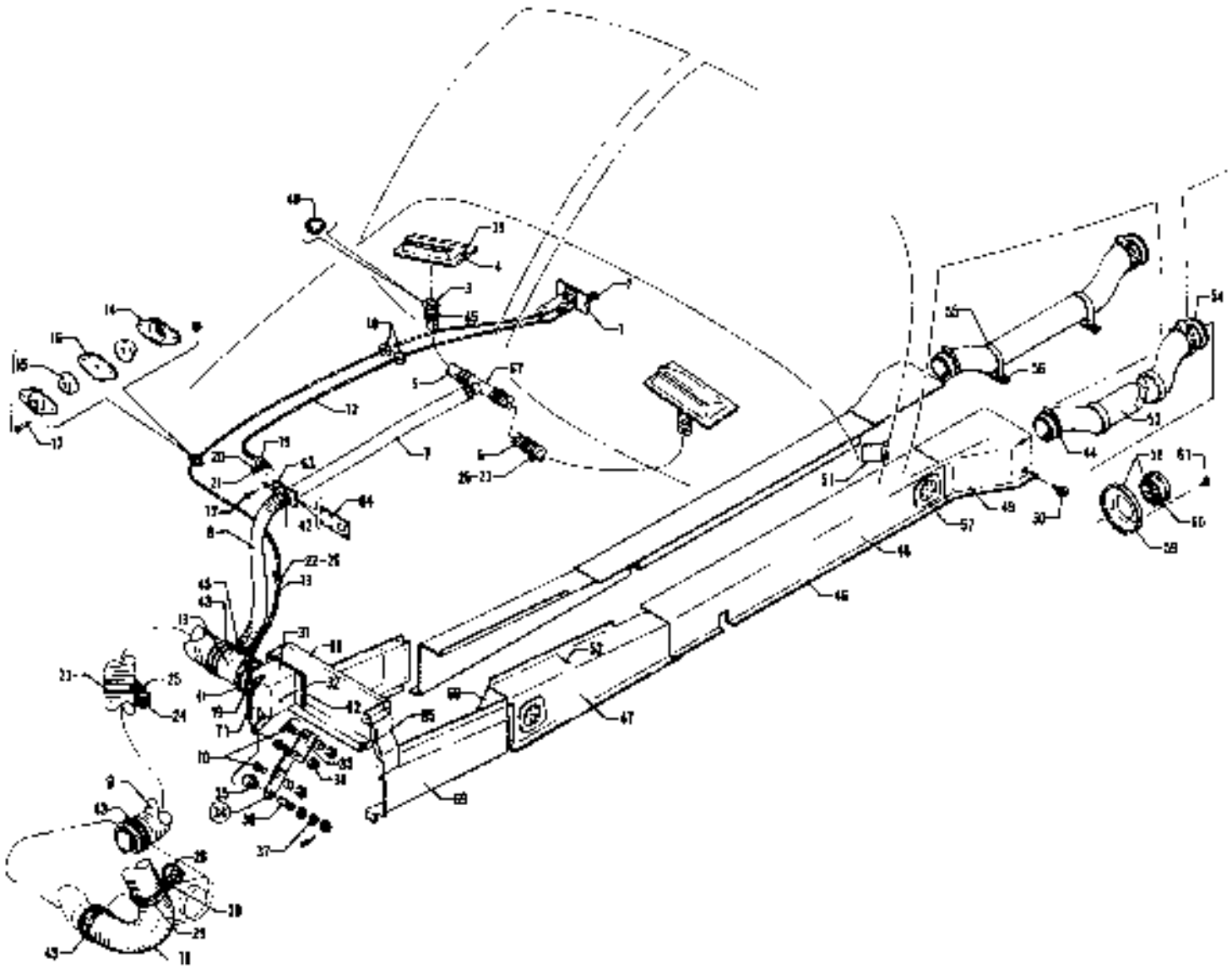

Figure 39 Cabin Heat and Defroster System

CODE EXPLANATIONS FOR FIGURE 39

W - These parts must be ordered from Service Spares Department, Piper Aircraft, Lock Haven, Penna.

PIPER PARTS CATALOG

Figure and Index Number	Part Number	Code	NOMENCLATURE	No. Req.	SERIAL NUMBERS AFFECTED
38-	38008		DRAWING - Cabin Heat and Defroster System Installation		
-1	79863-03		CONTROL ASSEMBLY - Heat and defroster	1	
-2	66980-00		KNOB ASSEMBLY - Heat and defroster	2	
-3	66906-00		OUTLET - Defroster air	2	
4	66318-00		OUTLET - Defroster air	2	
-5	63633-30		HOSE - Defroster air	1	
-6	63633-156		HOSE - Defroster air	1	
-7	63633-86		HOSE - Defroster air	1	
-8	63633-157		HOSE - Defroster air	1	
-9	63633-158		HOSE - Cabin heat	1	
-10	63633-161		HOSE - Cabin heat	1	
-11	38158-00		DUCT ASSEMBLY - Defroster take-off	1	
-12	554 375		CABLE ASSEMBLY - Defroster (PS50146-4-2)	1	
-13	554 487		CABLE ASSEMBLY - Cabin heat (PS50146-4-6)	1	
-14	66769-00		PLATE - Control cable, heat	2	
-15	68770-14		GROMMET - Control cable, heat	2	
-16	22105-03	W	GASKET - Control cable, heat	1	
-17	415 535	W	SCREW - (MS35206-245)	2	
	404 910	W	NUT - (MS20365-832C)	2	
-18	434 126	W	GROMMET (MS35489-4)	2	
-19	454 887		CLAMP - Cable (PS10017-1-3)	2	
-20	63900-19		BUSHING - Cable attachment	1	
-21	411 533		SCREW - (MS35207-264)	1	
	404 887	W	NUT - (MS20365-1032C)	1	
-22	454 928	W	CLAMP - Cable (PS10017-2-3)	1	
-23	654 869		CLAMP - (MS21919H48)	1	
24	454 868	W	CLAMP - (PS10017-2-12)	1	
-25	411 532		SCREW - (MS35207-263)	1	
	404 887	W	NUT - (MS20365-1032C)	1	
-26	411 530		SCREW - (MS35207-261)	2	
	404 887	W	NUT - (MS20365-1032C)	2	
-27	554 885	W	CLAMP - (PS10017-2-24)	1	
-28	544 710		CLAMP - (PS10017-2-26)	1	
-29	554 859		CLAMP - (MS21919-H46)	1	
-30	486 221	W	SCREW - (MS35207-264)	1	
	404 887	W	NUT - (MS20365-1032C)	1	
	404 584	W	WASHER - (AN960-10L)	1	
-31	66919-00		BOX ASSEMBLY - Cabin heat	1	
-32	415 532		SCREW - (MS35206-242)	4	
-33	66919-00		LINK - Cabin heat box	1	
-34	36558-08		LINK ASSEMBLY Cabin heat box	1	
-35	70371-02	W	SWIVEL - Cable attachment	1	
-36	70371-03	W	STUD - Cable attachment	1	
-37	91342-18		WASHER - Cable attachment	1	
	404 392	W	NUT - (AN320-3)	1	
	424 051	W	COTTER PIN - (MS24665-132)	1	
	407 585	W	WASHER - (AN960-416L)	1	
-38	415 516	W	SCREW - (MS35206-228)	1	
	404 909	W	NUT - (MS20365-632C)	1	
-39	415 521	W	SCREW - (MS35206-231)	4	
	404 909	W	NUT - (MS20365-632C)	4	
	404 562	W	WASHER - (AN960-6)	4	
-40	406 394		NUT - (C-13900-014-4)	2	

When ordering, always specify Part Number, Description and Serial Number of Aircraft

PIPER PARTS CATALOG

Figure and Index Number	Part Number	Code	NOMENCLATURE	No. Req.	SERIAL NUMBERS AFFECTED
39-41	554 926	W	CLAMP - (SAE TY F-44)	1	
-42	554 925	W	CLAMP - (SAE TY F-24)	2	
-43	554 772		CLAMP - (SAE TY A-3)	4	
-44	454 944	W	CLAMP - (SAE TY A-2 1/16)	4	
-45	554 896		CLAMP - (SAE TY A-1 1/2)	6	
-46	68923-00		DUCT ASSEMBLY - Cabin heat, left	1	
	68923-01		DUCT ASSEMBLY - Cabin heat, right	1	
-47	68923-02		DUCT - Cabin heat, left	1	
	68923-03		DUCT - Cabin heat, right	1	
-48	68923-04		DUCT - Cabin heat, left	1	
	68923-05		DUCT - Cabin heat, right	1	
-49	68923-06		DUCT - Cabin heat, left	1	
	68923-07		DUCT - Cabin heat, right	1	
-50	487 660	W	STUD - (XX-10382-12)	13	
-51	68088-00		PLATE - Deflector	2	
-52	419 590		SCREW - (AN530-8R8)	42	
-53	83833-36		HOSE - Air duct	2	
-54	69285-00		TUBE - Cabin heat	2	
-55	544 827		CLAMP - (M5219181134)	4	
-56	415 380		SCREW - (MS51958-84)	4	
	404 887	W	NUT - (MS20365-1032C)	4	
	404 263		NUT - (AN315D3R)	4	
-57	68933-00		DEFLECTOR ASSEMBLY	4	
-58	68926-00		DEFLECTOR ASSEMBLY	2	
-59	21166-00	W	PLATE - Deflector	1	
-60	68929-00		LOUVER ASSEMBLY - Deflector	1	
-61	419 641		SCREW - (4 x 1/2 Type A)	6	
-62	38204-00		ADAPTER - Cabin heat	1	
-63	38146-00		VALVE ASSEMBLY - Defroster	1	
-64	38146-08		GASKET - Defroster valve	1	
-65	38147-00		DUCT ASSEMBLY - Defroster air, left	1	
	38147-01		DUCT ASSEMBLY - Defroster air, right	1	
-66	38148-00		DUCT ASSEMBLY - Defroster air	1	
-67	69656-08		TAKE-OFF ASSEMBLY - Defroster air	1	
-68	38024-00		DUCT - Air, wheel well, left	1	
	38024-01		DUCT - Air, wheel well, right	1	
-69	38025-00		DUCT ASSEMBLY - Air, wheel well, left	1	
	38025-01		DUCT ASSEMBLY - Air, wheel well, right	1	
-70	415 522	W	SCREW - (MS35206-232)	2	
	95051-141		BUSHING	2	
	404 909	W	NUT - (MS20365-632C)	2	
-71	411 535		SCREW - (MS35207-266)	1	
	63900-136		BUSHING	1	
	404 887	W	NUT - (MS20365-1032C)	1	
-72	68904-00		BOLT - Defroster valve control	1	
	407 686	W	WASHER - (AN960-416)	1	
	404 888	W	NUT - (MS20365-428C)	1	

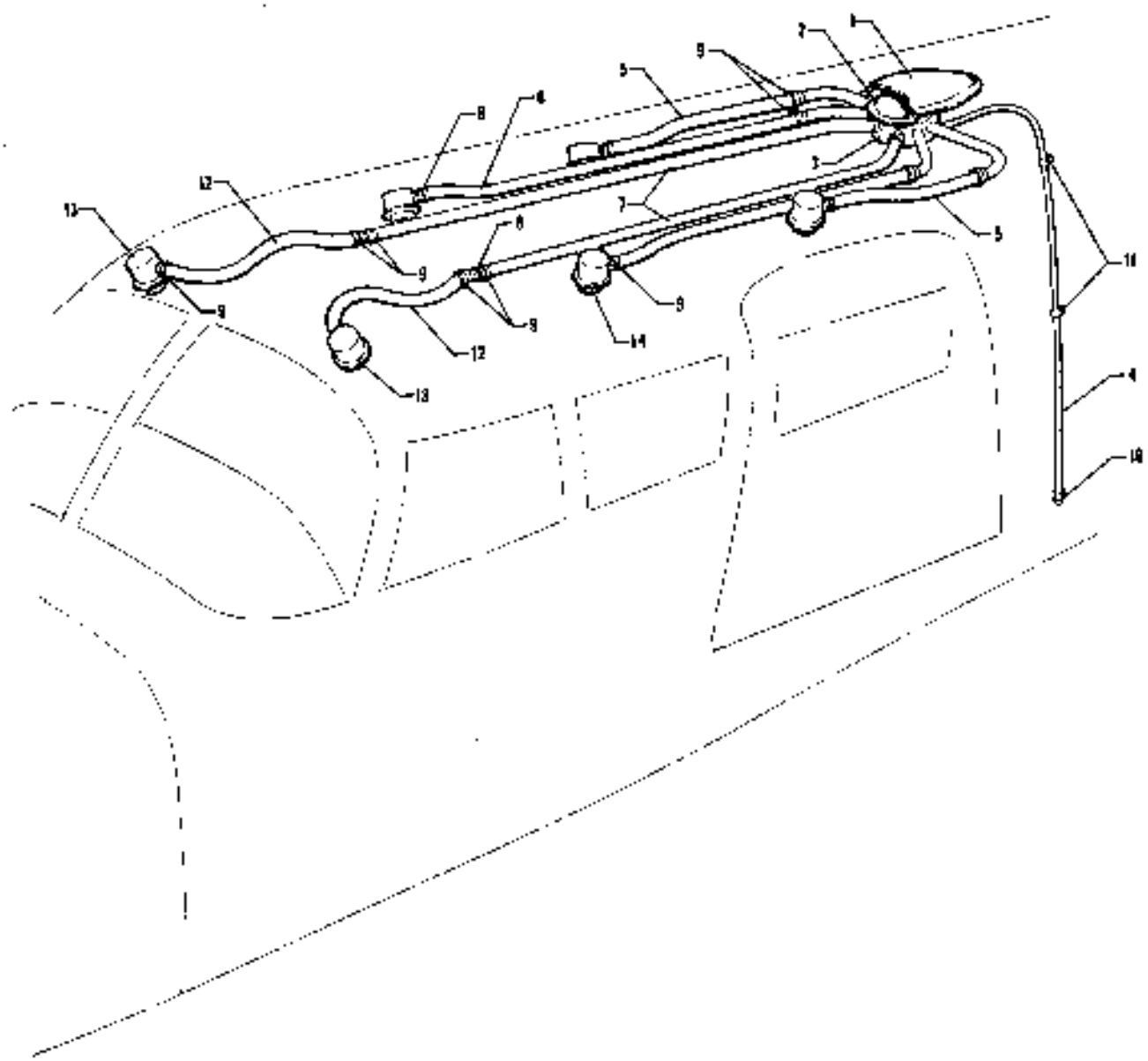

Figure 40. Cabin Overhead Air Vent Installation
(PA-32-260 - Serial Nos. 32-1 to 32-1320 inclusive)
(PA-32-300 - Serial Nos. 32-40000 to 32-41019 inclusive)

CODE EXPLANATIONS FOR FIGURE 40

A - Used on PA-32-260 with serial numbers 32-1 to 32-1320 inclusive, and PA-32-300 with serial numbers 32-40000 to 32-41018 inclusive.
B - Used on PA-32-260 with serial numbers 32-1 to 32-11, 32-15, 32-16, 32-19, 32-21, 32-22, 32-27, 32-30 to 32-55, 32-57 to 32-61 inclusive.
C - Used on PA-32-260 with serial numbers 32-12 to 32-14, 32-18, 32-17, 32-20, 32-23 to 32-26, 32-28, 32-29, 32-56, 32-62 to 32-1320 inclusive, and PA-32-300 with serial numbers 32-40000 to 32-41018 inclusive.
D - Optional equipment.
W - These parts must be ordered from Service Spares Department, Piper Aircraft, Lock Haven, Penna.

PIPER PARTS CATALOG

Figure and Index Number	Part Number	Code	NOMENCLATURE	No. Req.	SERIAL NUMBERS AFFECTED
40	68411		DRAWING - Headliner Installation		
	68206		DRAWING - Air Scoop Installation		
-1	68207-00		SCOOP - Air	1	
-2	68206-00		SCOOP - Inner air	1	
-3	68199-00		VENT ASSEMBLY - Air	1	
-4	63904-14		HOSE - Cabin air	1	
-5	63904-15		HOSE - Cabin air	2	
-6	63904-16		HOSE - Cabin air	2	
-7	63904-17		HOSE - Cabin air	2	
-8	65186-45		TUBE - Cabin air	2	
-9	464 837		CLAMP - Hose (H78000)	16	
-10	464 983	W	CLAMP - (SAE 8, Type E)	2	
-11	464 885	W	CLIP - (A48865-8-24A)	2	
-12	63904-18		HOSE - Ventilator	2	
-13	462 008		GASPER ASSEMBLY - Forward air vent (10-002B-3)	2	
-14	462 007		GASPER ASSEMBLY - Center and rear air vent	4	
	484 300	B,D	LIGHT AND GASPER ASSEMBLY - Center and rear air vent	4	
	484 296	C,D	LIGHT AND GASPER ASSEMBLY - Center and rear air vent	4	

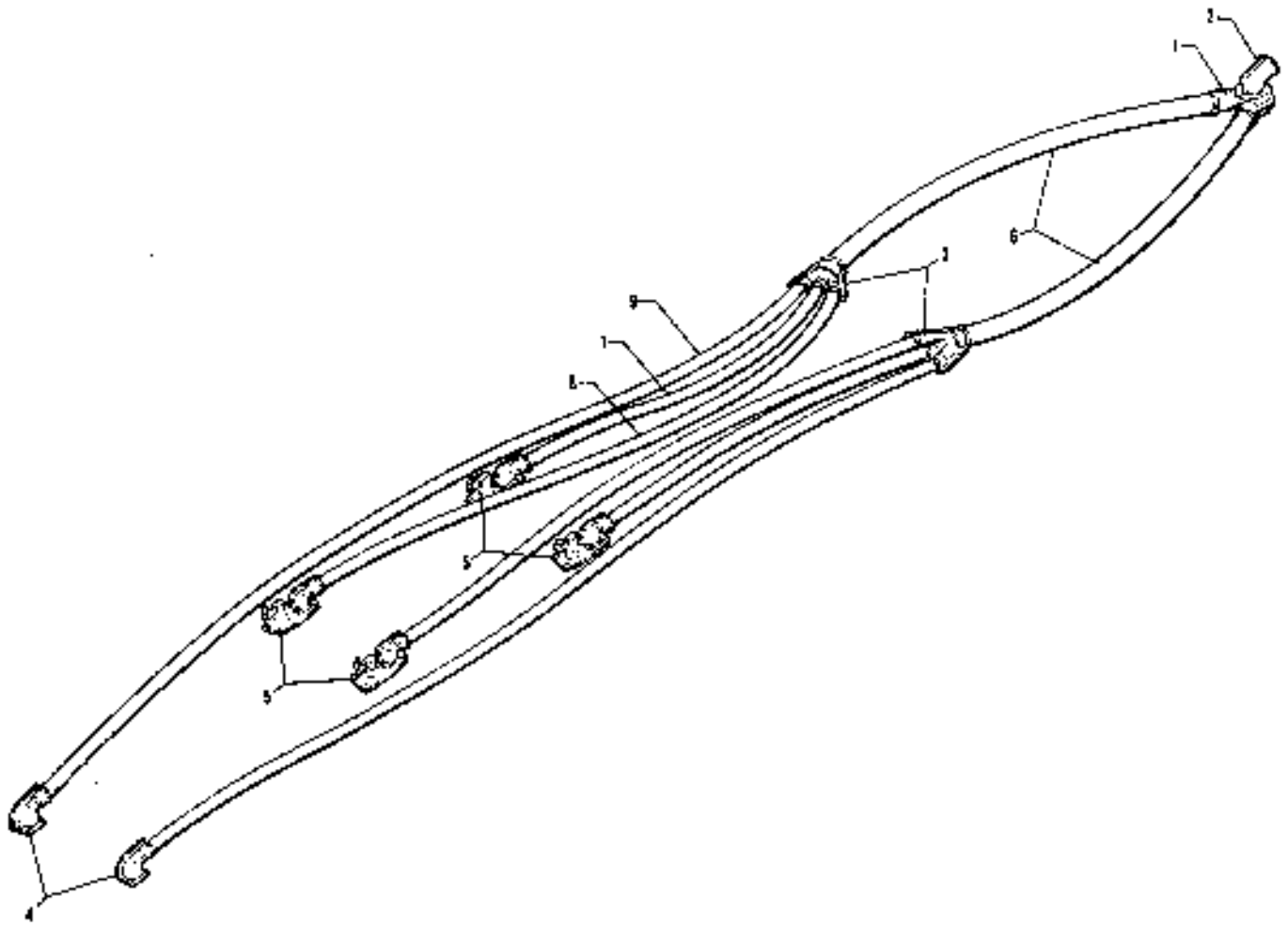

Figure 41 Cabin Overhead Air Vent Installation
(PA-32-260-Serial Nos. 32-7100001 to 32-7300078 inclusive)
(PA-32-300-Serial Nos. 32-7140001 to 32-7340201 inclusive)

CODE EXPLANATIONS FOR FIGURE 41

A - Used on PA-32-260 with serial numbers 32-7100001 to 32-7300076 inclusive, and PA-32-300 with serial numbers 32-7140001 to 32-7340201 inclusive.

PIPER PARTS CATALOG

Figure and Index Number	Part Number	Code	NOMENCLATURE	No. Req.	SERIAL NUMBERS AFFECTED
41-	69450		DRAWING - Headliner Installation		
-1	66962-00		BOX ASSEMBLY - Air vent	1	
-2	66978-00		TUBE ASSEMBLY - Air vent	1	
-3	69296-00		DIFFUSER ASSEMBLY - Air vent	2	
-4	69449-00		GASPER ASSEMBLY - Front air vent	2	
-5	69445-00		GASPER ASSEMBLY - Center and rear air vent	4	
	69445-00		LIGHT AND GASPER ASSEMBLY - Center and rear air vent	4	
-6	63904-49		HOSE - Air vent	2	
-7	63904-45		HOSE - Air vent	2	
-8	63904-47		HOSE - Air vent	2	
-9	63904-48		HOSE - Air vent	2	

1K23 THRU 1K24

INTENTIONALLY LEFT BLANK

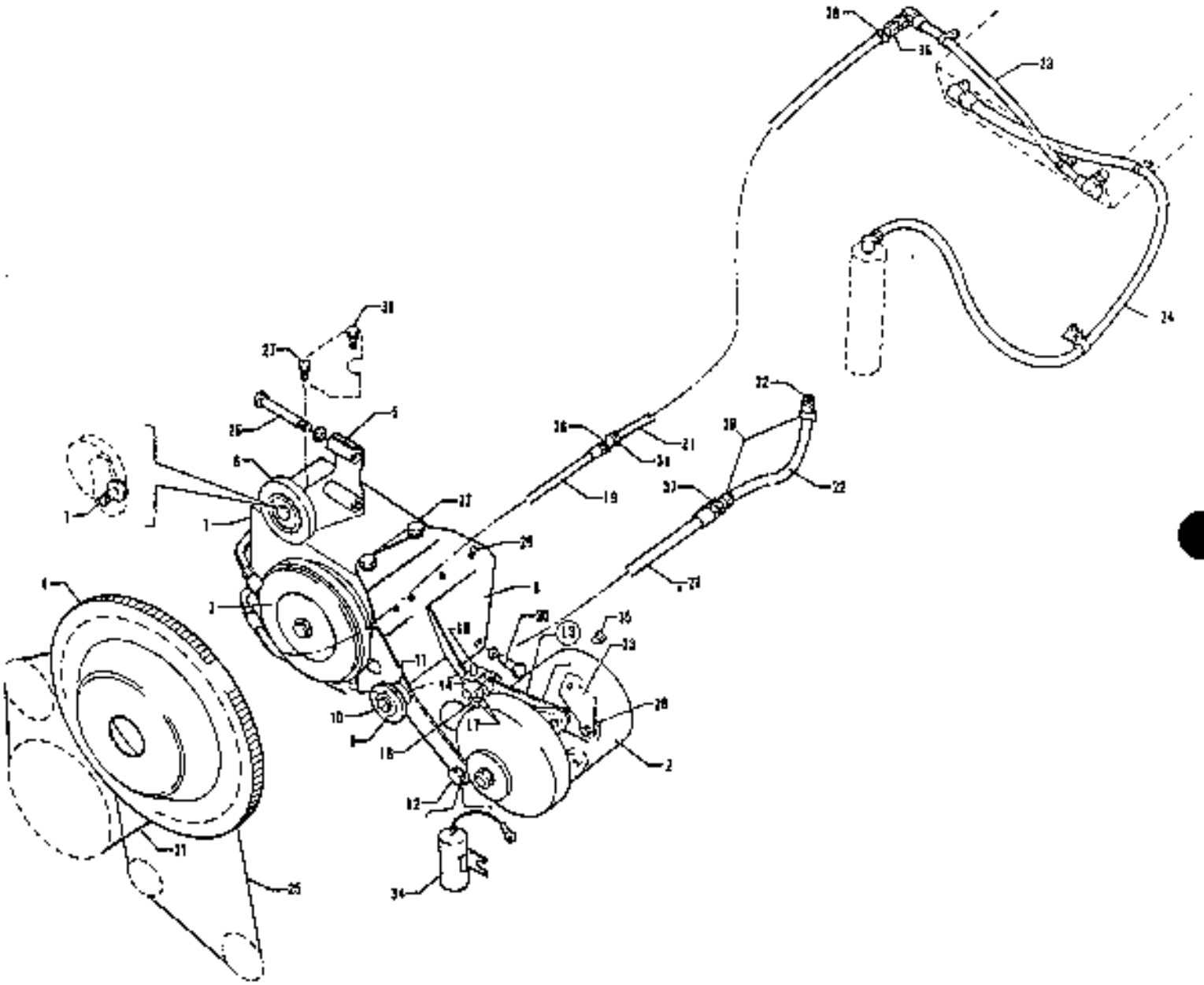

Figure 42. Air Conditioning Compressor, Refrigerant Lines and Alternator Installation
(PA-32-300 - Serial Nos. 32-40853, 32-7240066 and up)
(PA-32R-300 - Serial Nos. 32R-7680001 and up)

CODE EXPLANATIONS FOR FIGURE 42

A - Used on PA-32-300 with serial numbers 32-40853, 32-7240056 and up, and PA-32R-300 with serial numbers 32R-7680001 and up.
B - Used on PA-32-300 with serial numbers 32-7640055 and up, and PA-32R-300 with serial numbers 32R-7680055 and up.
C - Used on PA-32-300 with serial numbers 32-40853, 32-7240056 to 32-7640054 inclusive, and PA-32R-300 with serial numbers 32R-7680001 to 32R-7680054 inclusive.
D - See Figure 108 for component parts.
E - Used on PA-32-300 only.
F - Used on PA-32-300 with serial numbers 32-40853, 32-7240056 to 32-7940046 incl., and PA-32R-300 with serial numbers 32R-7680001 and up. If original one piece twisted brace has been replaced with a three piece bracket assembly, order individual parts listed for PA-32-300 with serial numbers 32-7940047 and up as desired.
G - Reference latest revision to Piper Service Letter 1040, applicable to PA-32-300 with serial numbers 7240056 and up and PA-32R-300 with serial numbers 32R-7680001 and up. Alternator Drive Belt Conversion Installation Kit, P/N 767-310, replaces the original factory installed alternator drive belt, which was of a narrow configuration.
H - Reference latest revision to Piper Service Letter 903. With the alternator belt installed, align the idler pulley in the belt plane by adding or removing shims P/N 62833-82 as required.

PIPER PARTS CATALOG

Figure and Index Number	Part Number	Code	NOMENCLATURE	No. Req.	SERIAL NUMBERS AFFECTED
42-	99109		DRAWING - Air Conditioning Compressor and Alternator Installation		32-7240056 and up
	99291		DRAWING - Air Conditioning Refrigerant Lines Installation		
-1	555 412		COMPRESSOR ASSEMBLY - (F209-16764)	1	
-2	551 983	D,G	ALTERNATOR ASSEMBLY - Prestolite (ALY-6422)	1	
-3	554 761		CLUTCH ASSEMBLY - (10616)	1	
-4	462 112		RING GEAR ASSEMBLY - (LW11573)	1	
-5	99763-00		BRACKET ASSEMBLY - Compressor, upper	1	
-6	99080-00	H	* IDLER PULLEY ASSEMBLY - Compressor drive	1	
-7	400 616		* BOLT - (AN8H-7A)	1	
	407 569		* WASHER - (AN960-816)	1	
	62833-83		* WASHER	3	
-8	79584-08		BRACKET ASSEMBLY - Compressor, lower	1	
-9	99072-00		* PULLEY ASSEMBLY - Alternator drive	1	
-10	553 230		* BOLT - (NAS2906-20)	1	
	62833-82		* WASHER - Alternator pulley	2	
	79558-02		* NUT - Alternator pulley	1	
-11	95061-151		* BUSHING - Alternator idler pulley	1	
-12	401 394		* BOLT - (AN6-13A)	2	
	407 567		* WASHER - (AN960-616)	2	
	404 890		* NUT - (MS20365-624C)	2	
-13	79886-11	F	BRACKET ASSEMBLY COMPLETE - Alternator support	1	
-14	79886-03	E	* CHANNEL ASSEMBLY - Alternator support	1	32-7940047 and up
-15	79886-04	E	* ARM ASSEMBLY - Alternator support	1	32-7940047 and up
-16	79886-07	E	* ARM ASSEMBLY - Alternator support	1	32-7940047 and up
-17	400 009	E	* BOLT - (AN4-14A)	2	32-7940047 and up
	407 585	E	* WASHER - (AN960-416L)	2	32-7940047 and up
	404 888	E	* NUT - (MS20365-428C)	2	32-7940047 and up
-18	486 126	E	* BOLT - (MS16997-81)	1	32-7940047 and up
-19	99592-08		HOSE ASSEMBLY - Discharge (PS10037-7)	1	
-20	99592-09		HOSE ASSEMBLY - Suction (PS10037-8)	1	
-21	63904-67	C	HOSE ASSEMBLY - Discharge	1	
	63904-92	B	HOSE ASSEMBLY - Discharge	1	
-22	63904-68		HOSE ASSEMBLY - Suction	1	
-23	755 272	C	HOSE ASSEMBLY - Discharge	1	
	565 576	B	HOSE ASSEMBLY - Discharge	1	
-24	565 441	C	HOSE ASSEMBLY - Receiver dehydrator to condenser	1	
	565 578	B	HOSE ASSEMBLY - Receiver dehydrator to condenser	1	
-25	452 572	H	BELT - (PS10069-1-1)	1	
-26	401 461		BOLT - (AN6H22A)	2	
	407 567		WASHER - (AN960-616)	4	
	407 587		WASHER - (AN960-616L)	2	
	407 597		WASHER - (AN960-D616L)	2	
-27	401 986		BOLT - (MS20074-06-05)	3	
	407 587		WASHER - (AN960-616L)	3	
-28	401 971		BOLT - (MS20074-05-06)	1	
	407 566		WASHER - (AN960-516)	1	
-29	401 970		BOLT - (MS20074-05-05)	4	
	407 586		WASHER - (AN960-515L)	4	
-30	401 988		BOLT - (MS20074-06-11)	2	
	407 587		WASHER - (AN960-616L)	2	
-31	452 573		BELT - (PS10069-1-2)	1	
-32	451 906		ADAPTER - (PS10022-6-4)	1	
-33	99580-00		CLIP ASSEMBLY - Left front baffle	1	

When ordering, always specify Part Number, Description, and Serial Number of Aircraft

PIPER PARTS CATALOG

Figure and Index Number	Part Number	Code	NOMENCLATURE	No. Req.	SERIAL NUMBERS AFFECTED
42-34	63897-03		CAPACITOR ASSEMBLY	1	
-35	486 457	E	SEAL - (53-8543-0013)	1	32-7940001 and up
-36	461 907		ADAPTER - (PS10022-6-13)	2	
-37	461 908		ADAPTER (PS10022-6-14)	1	
-38	554 678		CLAMP - (H-6)	4	
39	401 987		BOLT - (MS20074-06-08)	1	
	407 587	W	WASHER - (AN960-616L)	1	

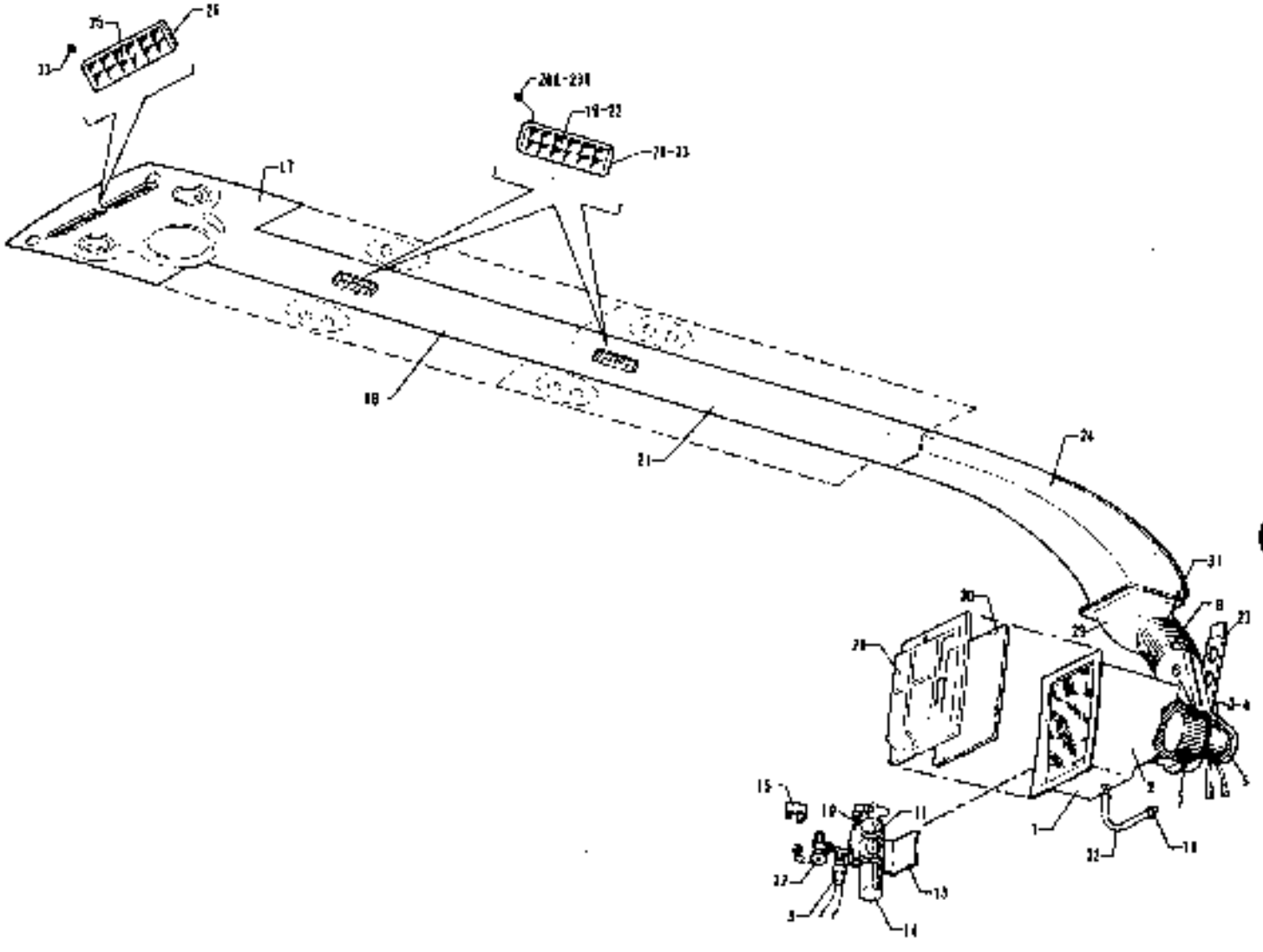

Figure 43 Air Conditioning Duct and Evaporator Installation
(PA-32-300 - Serial Nos 32-40863, 32-7240056 and up)
(PA-32R-300- Serial Nos 32R-7680001 and up)

CODE EXPLANATIONS FOR FIGURE 43

A - Used on PA-32-300 with serial numbers 32-40853, 32-7240056 and up, and PA-32R-300 with serial numbers 32R-7680001 and up
B - Used on PA-32-300 with serial numbers 32-7640030 to 32-7940180 incl., PA-32R-300 with serial numbers 32R-7680014 and up
C - Used on PA-32-300 with serial numbers 32-7440001 to 32-7640142 inclusive, and PA-32R-300 with serial numbers 32R-7680001 to 32R-7680538 inclusive
D - Used on PA-32-300 with serial numbers 32-7740001 to 32-7940180 incl., and PA-32R-300 with serial numbers 32R-7780001 and up
E - Used on PA-32-300 with serial numbers 32-7440001 to 32-7940180 incl., and PA-32R-300 with serial numbers 32R-7680001 and up
F - Used on PA-32-300 with serial numbers 32-40853, 32-7240056 to 32-7740086 inclusive, and PA-32R-300 with serial numbers 32R-7680001 to 32R-7780441 inclusive
G - Used on PA-32-300 with serial numbers 32-7740087 and up, and PA-32R-300 with serial numbers 32R-7780442 and up
H - Used on PA-32-300 with serial numbers 32-7740087 and up, and PA-32R-300 with serial numbers 32R-7780442 and up. Also used on PA-32-300 with serial numbers 32-40853, 32-7240056 to 32-7740086 inclusive, and PA-32R-300 with serial numbers 32R-7680001 to 32R-7780441 inclusive if Blower Assembly Kit 761 150 has previously been installed
J - Used on PA-32-300 with serial numbers 32-7440001 to 32-7640029 inclusive, and PA-32R-300 with serial numbers 32R-7680001 to 32R-7680013 inclusive
K - Used on PA-32-300 with serial nos. 32-7440001 to 32-7940180 incl., and PA-32R-300
L - Used on PA-32-300 only
M - Used on PA-32-300 with serial nos. 32-7240056 to 32-7940180 incl., and PA-32R-300. If interconnect duct assembly and aft cabin bulkhead duct are bonded (not riveted) to aft cabin bulkhead, order part listed for PA-32-300 with serial nos. 32-7940181 and up
W - These parts must be ordered from Service Spares Department, Piper Aircraft, Lock Haven, Penna.

PIPER PARTS CATALOG

Figure and Index Number	Part Number	Code	NOMENCLATURE	No. Req.	SERIAL NUMBERS AFFECTED
43-	69604		DRAWING - Air Conditioning Duct Installation		32-7240056 to 32-7340201 incl
	69744	K	DRAWING - Air Conditioning Duct Installation		
	69988	L	DRAWING - Air Conditioning Duct Installation		32-7940181 and up
	99292	K	DRAWING - Evaporator Bulkhead Assembly		
	79841	L	DRAWING - Evaporator Bulkhead Assembly		32-7940181 and up
-1	99640-00		EVAPORATOR ASSEMBLY - Air conditioning	1	
-2	99640-03		* EVAPORATOR AND HOUSING ASSEMBLY - Air conditioning	1	
-3	761 150	F	* BLOWER ASSEMBLY KIT - Evaporator	1	
	99642-03	G	* BLOWER ASSEMBLY - Evaporator	1	
-4	475 210	H	* * MOTOR ASSEMBLY - Evaporator blower (UN-YY1S082)	1	
-5	37997-02		* * COVER - Evaporator blower	1	
-6	99641-00		* * PLATE ASSEMBLY - Motor mounting	1	
-7	452 935		* BLOWER - (AE424-316-1)	1	
-8	99633-00		* DUCT - Hose connect	1	
-9	99648-02		* SWITCH ASSEMBLY - Pressure	1	
-10	589 688		* LINE ASSEMBLY - Evaporator inlet (37245-6-6S)	1	
-11	554 826	W	* CLAMP - (SAE TY F-44)	2	
-12	99646-00		* VALVE ASSEMBLY - Evaporator expansion	1	
-13	99660-00		* BRACKET - Receiver dehydrator	1	
-14	456 615		* RECEIVER DEHYDRATOR - (1106)	1	
-15	99661-00		* CLAMP - Bulb, expansion valve	1	
-16	554 678		CLAMP - (PS10017-23-6)	2	
-17	69605-00		PANEL ASSEMBLY - Cabin light and air conditioning	1	32-7240056 to 32-7340201 incl
	69746-00		PANEL ASSEMBLY - Cabin light and air conditioning	1	
	69746-13	B	PANEL ASSEMBLY - Cabin light and air conditioning (with speaker hole)	1	
	69746-15	D	PANEL ASSEMBLY - Cabin light and air conditioning (without speaker hole)	1	
	69989-03		PANEL ASSEMBLY - Cabin light and air conditioning (with speaker hole)	1	
	69989-02		PANEL ASSEMBLY - Cabin light and air conditioning (without speaker hole)	1	
-18	69618-00	L	DUCT ASSEMBLY - Air conditioner, front	1	32-7240056 to 32-7340201 incl
	69750-00	E	DUCT ASSEMBLY - Air conditioner, front	1	
	69990-02	L	DUCT ASSEMBLY - Air conditioner, front	1	32-7940181 and up
-19	473 187		* LOUVER - (241037)	2	
-20	461 386		* FRAME - (241040)	2	
-20a	406 424		* NUT - (C2733-040-1)	8	
-21	69619-00	L	DUCT ASSEMBLY - Air conditioner, center	1	32-7240056 to 32-7340201 incl
	69619-02	C	DUCT ASSEMBLY - Air conditioner, center	1	
	69619-03	D	DUCT ASSEMBLY - Air conditioner, center	1	
	69991-02	L	DUCT ASSEMBLY - Air conditioner, center	1	32-7940181 and up
-22	473 187		* LOUVER - (241037)	2	
-23	461 386		* FRAME - (241040)	2	
-23a	406 424		* NUT - (C2733-040-1)	8	
-24	99507-00	M	DUCT ASSEMBLY - Aft cabin bulkhead	1	
	79839-03	L	DUCT ASSEMBLY - Aft cabin bulkhead	1	32-7940181 and up
-25	473 187		LOUVER - (136-1M)	2	
-26	461 386		FRAME - (173-M)	2	
-27	99539-00		SUPPORT ASSEMBLY - Evaporator box	1	
-28	99560-02		COVER - Evaporator filter	1	
-29	99634-00	M	DUCT ASSEMBLY - Interconnect	1	
	79840-04	L	DUCT ASSEMBLY - Interconnect	1	32-7940181 and up
-30	89644-00		FILTER - Evaporator	1	
-31	83833-100		HOSE - Air conditioning	1	
-32	63913-199		HOSE - Evaporator drain	1	
-33	406 424		NUT - (C2733-040-1)	8	

When ordering, always specify Part Number, Description and Serial Number of Aircraft

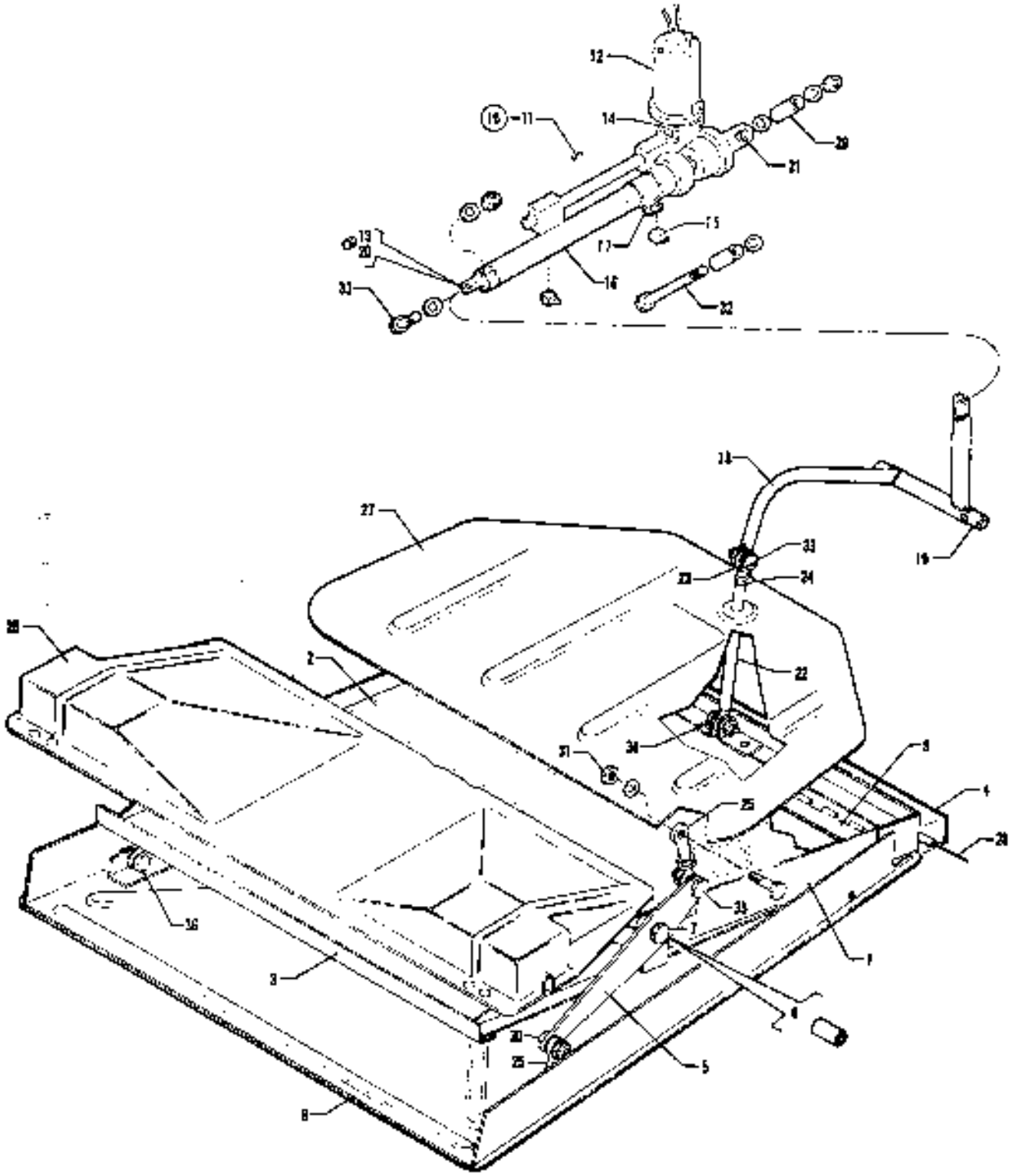

Figure 44. Air Conditioning Condenser Installation
(PA-32-300 - Serial Nos. 32-40853, 32-7240058 and up)
(PA-32R-300 - Serial Nos. 32R-7680001 and up)

CODE EXPLANATIONS FOR FIGURE 44

A - Used on PA-32-300 with serial numbers 32-40853, 32-7240056 and up, and PA-32R-300 with serial numbers 32R-7680001 and up.
B - Used if existing transmission does not include a switch mounting rod with two limit switches.
C - Used on PA-32-300 with serial numbers 32-40853, 32-7240056 to 32-7240080 inclusive if existing transmission includes a switch mounting rod with two limit switches.
D - Used on PA-32-300 with serial numbers 32-40853, 32-7240056 to 32-7640054 inclusive, and PA-32R-300 with serial numbers 32R-7680001 to 32R-7680054 inclusive.
E - Used on PA-32-300 with serial numbers 32-7640055 and up, and PA-32R-300 with serial numbers 32R-7680055 and up.
F - Reference latest revision to Piper Service Bulletin 427, applicable to PA-32-300. The condenser door bell crank assembly could interfere with the stabilator and rudder control cables. Kit No. 760-822 provides material and instructions to install a fairlead panel in the aft fuselage section to preclude the possibility of the stabilator and rudder control cables coming in contact with the bell crank.

PIPER PARTS CATALOG

Figure and Index Number	Part Number	Code	NOMENCLATURE	No. Req.	SERIAL NUMBERS AFFECTED
44-	99288	B	DRAWING - Air Conditioning Condenser Installation		32-7240056 to 32-7240080 incl.
	99855	C	DRAWING - Air Conditioning Condenser Installation		32-7240081 and up
-1	99387-00		CONDENSER ASSEMBLY - Air conditioning (complete)	1	
-2	555 457		* CONDENSER - (1E-1415C)	1	
-3	99263-00		* HINGE ASSEMBLY - Condenser duct	1	
-4	99275-02		* HINGE - Half	1	
-5	99495-00	F	* BELLCRANK ASSEMBLY - Condenser door mechanism	2	
-6	65003-56		* BUSHING	2	
-7	401 273		* BOLT - (AN3-14A)	2	
	407 584		* WASHER - (AN960-10L)	4	
	404 887		* NUT - (MS20365-1032C)	2	
-8	99271-00		DOOR ASSEMBLY - Louver	1	
-9	99275-02		* HINGE - Half	1	
-10	760 706	B	KIT - Transmission replacement	1	32-7240056 to 32-7240080 incl.
-11	99854-00	C	* TRANSMISSION ASSEMBLY - Condenser door actuating (complete)	1	32-7240081 and up
-12	761 519	C	* * MOTOR ASSEMBLY - Transmission (C145-200)	1	32-7240081 and up
-13	452 571	C	* * BEARING - (AA225-1)	1	32-7240081 and up
-14	753 085	C	* * UNIVERSAL ASSEMBLY - (B100-06)	1	32-7240081 and up
-15	757 718	C	* * SWITCH - Limit (V3L-3-D9)	2	32-7240081 and up
-16	99853-00	C	* * TUBE ASSEMBLY - Actuator	1	32-7240081 and up
-17	554 714	C	* * CLAMP - (AN741-8P)	1	32-7240081 and up
-18	99867-00		* BELLCRANK ASSEMBLY - Condenser	1	
-19	452 570		* * BUSHING - Bronze (FF565-2)	2	
-20	452 558	B	BEARING - Rod end (PS10020-5-1R)	1	32-7240056 to 32-7240080 incl.
-21	452 561		BEARING - (AA304-20)	1	
-22	99557-00		ROD ASSEMBLY - Condenser push	1	
-23	452 558		* BEARING - Rod end (PS10020-5-1R)	2	
-24	400 224		* NUT - (AN315-3R)	1	
-25	99561-00		BEARING ASSEMBLY - Condenser door actuating	4	
-26	99572-00	D	COVER ASSEMBLY - Forward	1	
	99572-04	E	COVER ASSEMBLY - Forward	1	
-27	99569-00		COVER ASSEMBLY - Aft	1	
-28	99275-04		PIN - Hinge	1	
-29	65165-87		TUBE	2	
-30	400 861		BOLT - (AN23-13A)	2	
	407 564		WASHER - (AN960-10)	2	
	62833-101		WASHER - (.56 O.D.	2	
	404 887		NUT - (MS20365-1032C)	2	
-31	400 441		BOLT - (AN3-7A)	2	
	407 564		WASHER - (AN960-10)	6	
	404 887		NUT - (MS20365-1032C)	2	
-32	401 334		BOLT - (AN4-36A)	1	
	407 565		WASHER - (AN960-416)	3	
	404 888		NUT - (MS20365-428C)	1	
-33	400 861		BOLT - (AN23-13A)	2	
	407 564		WASHER - (AN960-10)	2	
	404 887		NUT - (MS20365-1032C)	2	
-34	401 269		BOLT - (AN3-10A)	1	
	407 564		WASHER - (AN960-10)	3	
	404 887		NUT - (MS20365-1032C)	1	
-35	400 440		BOLT - (AN3-6A)	2	
	407 564		WASHER - (AN960-10)	4	
	404 835		NUT - (MS20364-1032C)	2	

When ordering, always specify Part Number, Description, and Serial Number of Aircraft

PIPER PARTS CATALOG

Figure and Index Number	Part Number	Code	NOMENCLATURE	No. Req.	SERIAL NUMBERS AFFECTED
44-38	400 861		BOLT - (AN23-13A)	2	
	407 564	W	WASHER - (AN960-10)	4	
	62833-101		WASHER - (.56 O.D.)	2	
	404 867	W	NUT - (MS20365-1032C)	2	

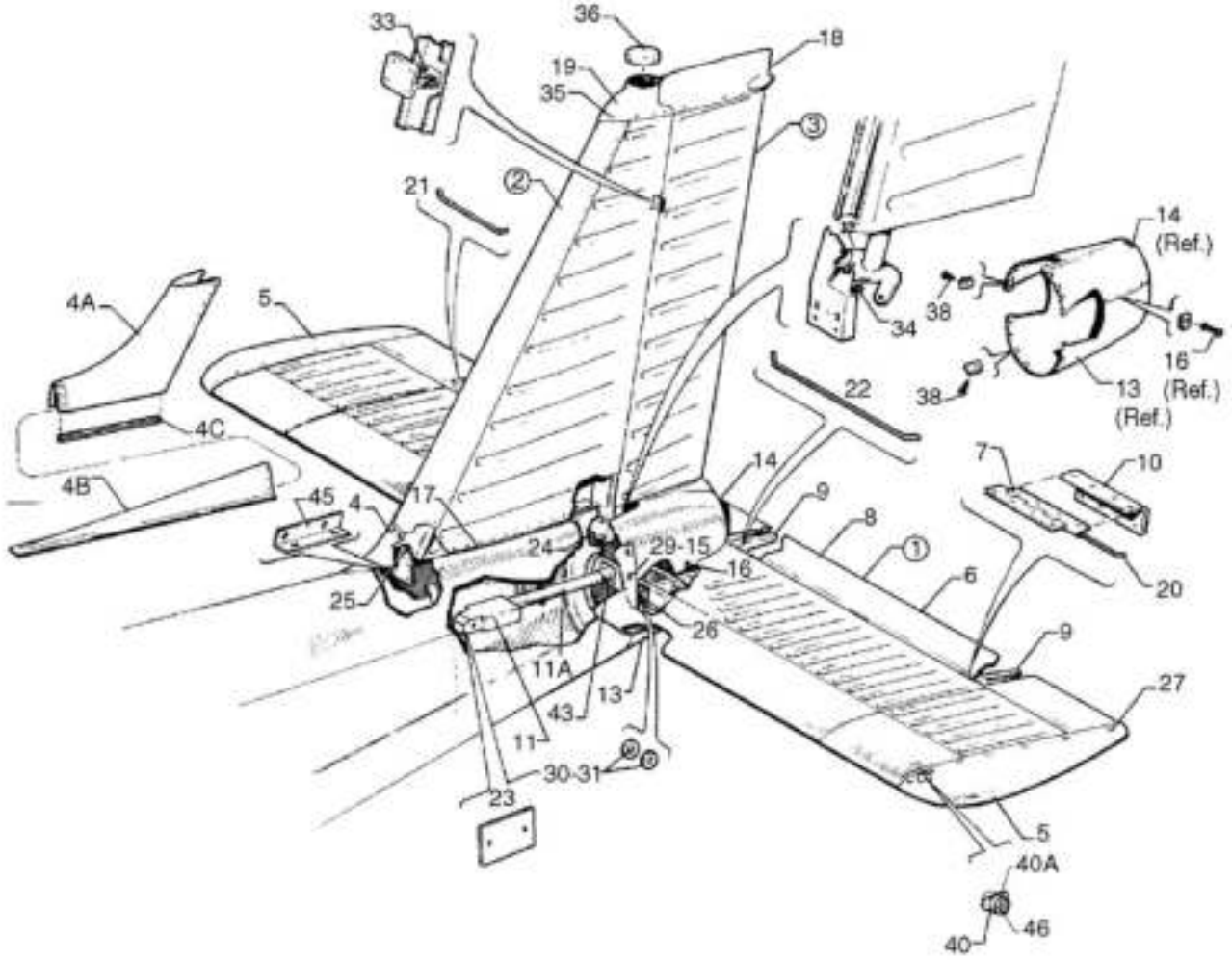

Figure 45. Tail Surfaces Installation

CODE EXPLANATIONS FOR FIGURE 45

A - See Figure 46 for component parts.
B - See Figure 47 for component parts.
G - Used on PA-32-260 with serial numbers 32-7200001 and up, PA-32-300 with serial numbers 32-7240001 and up, and PA-32R-300.
H - Used on PA-32-260 with serial numbers 32-7400001 and up, PA-32-300 with serial numbers 32-7440001 and up, and PA-32R-300.
J - Used on PA-32-260 and PA-32-300 only.
K - Used on PA-32R-300 only.
L - Used on PA-32-260 with serial numbers 32-451 to 32-500 inclusive, and 32-535 to 32-1171 inclusive, and PA-32-300 with serial numbers 32-40000 to 32-40728 inclusive.
N - Used on PA-32-260 with serial numbers 32-1251 and up, and PA-32-300 with serial numbers 32-40851 and up.
O - Used on PA-32-260 with serial numbers 32-7200029 and up, and PA-32-300 with serial numbers 32-7240096 and up.
P - Used when rotating beacon is not installed.
Q - Used on PA-32-260 with serial numbers 32-1172 and up, PA-32-300 with serial numbers 32-40729 and up, and PA-32R-300.
R - Used on PA-32-260 with serial numbers 32-1 to 32-7700023 inclusive, PA-32-300 with serial numbers 32-40000 to 32-7840025 incl, and PA-32R-300 with serial numbers 32R-7680001 to 32R-7880031 incl.
S - Used on PA-32-260 with serial numbers 32-7800001 and up, PA-32-300 with serial numbers 32-7840026 and up, and PA-32R-300 with serial numbers 32R-7880032.
T - Reference latest revision to Piper Service Letter 576, applicable to PA-32-260 and PA-32-300.

PIPER PARTS CATALOG

Figure and Index Number	Part Number	Code	NOMENCLATURE	No. Req.	SERIAL NUMBERS AFFECTED
45-	68425		DRAWING - Tail Surfaces Installation		
-1	68426-00	A,J	STABILATOR ASSEMBLY	1	
	68426-02	A,K	STABILATOR ASSEMBLY	1	
-2	66975-03	B,J	FIN ASSEMBLY	1	
	66975-04	B,K	FIN ASSEMBLY	1	
-3	65342-02	B	RUDDER ASSEMBLY	1	
-4	63517-00	F	FAIRING - Fin	1	
-4a	99619-02	G	FAIRING ASSEMBLY - Fin, aft	1	
-4b	99621-00	G	FAIRING - Fin, forward	1	
-4c	63186-21	G	MOULDING - Extruded	2	
-5	63584-16		TIP ASSEMBLY - Stabilator	2	
-6	63585-03		TAB ASSEMBLY - Stabilator trim, left	1	
	63585-04		TAB ASSEMBLY - Stabilator trim, right	1	
-7	63560-02		* HINGE - Half, stabilator tab	3	
-8	63586-00		* SKIN - Stabilator trim tab, left	1	
	63586-01		* SKIN - Stabilator trim tab, right	1	
-9	63587-02		* RIB - Outboard	2	
	63587-03		* RIB - Inboard	2	
-10	63588-00		* DOUBLER	3	
-11	99803-07	J	BALANCE WEIGHT ASSEMBLY - Stabilator	1	
	99803-05	K	BALANCE WEIGHT ASSEMBLY - Stabilator	1	
-11a	69624-02	T	* TUBE ASSEMBLY - Stabilator	1	
-12			DELETED		
-13	66822-09		LOWER FAIRING ASSEMBLY	1	
-14	66822-10		UPPER FAIRING ASSEMBLY	1	
-15			DELETED		
-16	414 783		SCREW - (MS24693-C51)	10	
	598-395		WASHER - (PS10092-1-2SS)	10	
	477 640		NUT - (PS10062-5-3)	10	
-17	63186-02		MOULDING - Extruded	2	
-18	99868-00	J	FAIRING ASSEMBLY - Rudder tip	1	
	38245-00	K	FAIRING ASSEMBLY - Rudder tip	1	
19	65345-03		TIP - Fin (for rotating beacon)	1	
	99035-03	N	TIP - Fin (for strobe light)	1	
	38222-00	K	TIP - Fin	1	
-20	62002-02		PIN - Hinge	2	
-21	62002-03		PIN - Hinge	2	
-22	62002-04		PIN - Hinge	1	
-23	96564-00		PLATE - Stabilator balance	AR	
-24	400 003		BOLT - (AN4-6A)	4	
	407 565		NUT - (MS20365-428C)	4	
-25	400 003		BOLT - (AN4-6A)	1	
	690 613	R	WASHER - (NAS1149F0432P)	2	
	690 611	S	WASHER - (NAS1149F0463P)	2	
-26	402 680		BOLT - (NAS1104-17)	2	
	690 611		WASHER - (NAS1149F0463P)	4	
	406 945		NUT - (NAS679A4W)	2	
-27	410 054		SCREW - (MS24694-C5)	28	
	598 395		WASHER - (PS10092-1-2SS)	28	
	406 709		NUT - (PS10062-3-12)	28	
-28			DELETED		

When ordering, always specify Part Number, Description, and Serial Number of Aircraft

PIPER PARTS CATALOG

Figure and Index Number	Part Number	Code	NOMENCLATURE	No. Req.	SERIAL NUMBERS AFFECTED
45-29	415 449		SCREW - (AN526-832R8)	16	
	477 672		NUT - (PS10062-5-1)	16	
-30	690 613		WASHER - (NAS1149F0432P)	AR	
-31	690 611		WASHER - (NAS1149F0463P)	AR	
-32	401 269		BOLT - (AN3-10A)	1	
	690 612		WASHER - (NAS1149F0363P)	3	
	404 526		NUT - (MS21042-3)	1	
	690 609		WASHER - (NAS1149F0332P)	1	
-33	400 056		BOLT - (AN3-11)	1	
	690 612		WASHER - (NAS1149F0363P)	5	
	690 609		WASHER - (NAS1149F0332P)	2	
	404 100		NUT - (AN310-3)	1	
	424 051		COTTER PIN - (MS24665-132)	1	
-34	553 266		BOLT - (NKN428-3-7)	2	
	404 224		NUT - (AN315-3R)	2	
-35	414 763		SCREW - (AN507-832R8)	16	
	494 081		WASHER - (A3135-017-1)	16	
	477 672		NUT - (PS10062-5-1)	1	
-36	63264-00	P	COVER - Fin Tip	1	
-37			DELETED		
-38	415 179		SCREW - (AN526C-832R8)	16	
	477 640		NUT - (PS10062-5-3)	16	
-39			DELETED		
-40	38192-00	K	WEIGHT ASSEMBLY - Stabilator tip	2	
-40a	151 296	K	WIRE - (MS20995C32)	AR	
-41			DELETED		
-42			DELETED		
-43	400 450		BOLT - (AN3-17A)	2	
	690 612		WASHER - (NAS1149F0363P)	4	
	404 526		NUT - (MS21042-3)	2	
-44			DELETED		
-45	79277-00		ANGLE - Dorsal fin fitting, left	1	
	79277-01		ANGLE - Dorsal fin fitting, right	1	
-46	401 264	K	BOLT - (AN3H-4A)	3	
	690 612	K	WASHER - (NAS1149FN363P) (1 under head and 1 between flange and rib)	6	

When ordering, always specify Part Number, Description, and Serial Number of Aircraft

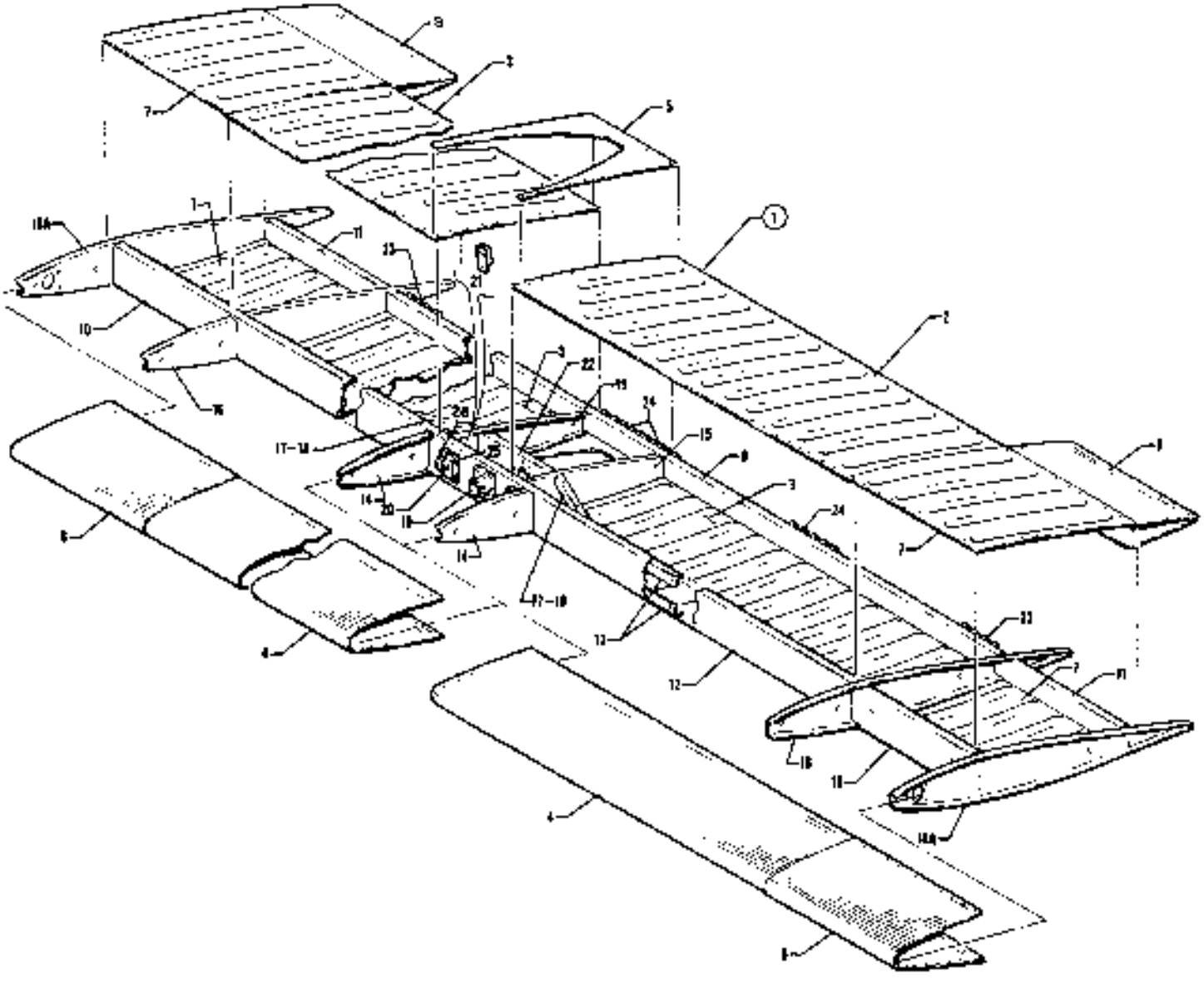

Figure 46. Stabilizer Assembly

CODE EXPLANATIONS FOR FIGURE 46

A - Used on PA-32-260 and PA-32-300 only.
B - Used on PA-32R-300 only.
C - Reference latest revision to Piper Service Letter 576.

PIPER PARTS CATALOG

Figure and Index Number	Part Number	Code	NOMENCLATURE	No. Req.	SERIAL NUMBERS AFFECTED
46-1	68426-00	A	STABILATOR ASSEMBLY	1	
	68426-02	B	STABILATOR ASSEMBLY	1	
-2	63392-00		* SKIN - Stabilator, aft top, left	1	
	63392-01		* SKIN - Stabilator, aft top, right	1	
-3	63393-00		* SKIN - Stabilator, aft bottom, left	1	
	63393-01		* SKIN - Stabilator, aft bottom, right	1	
-4	63573-00		* SKIN - Stabilator, leading edge, left	1	
	63573-01		* SKIN - Stabilator, leading edge, right	1	
-5	63575-00		* SKIN - Stabilator, center, top	1	
	63575-02		* SKIN - Stabilator, center, bottom	1	
-6	68429-00	A	* SKIN - Stabilator, leading edge, left	1	
	68429-01	A	* SKIN - Stabilator, leading edge, right	1	
	68429-02	B	* SKIN - Stabilator, leading edge, left	1	
	68429-03	B	* SKIN - Stabilator, leading edge, right	1	
-7	68430-00		* SKIN - Stabilator, top, left	1	
	68430-01		* SKIN - Stabilator, top, right	1	
	68430-02		* SKIN - Stabilator, bottom, left	1	
	68430-03		* SKIN - Stabilator, bottom, right	1	
-8	68431-00		* SKIN - Stabilator, top, left, bottom, right	2	
	68431-01		* SKIN - Stabilator, top, right, bottom, left	2	
-9	63572-00		* SPAR - Stabilator, rear	1	
-10	68427-00		* SPAR - Stabilator, outboard, forward	2	
-11	68428-00		* SPAR - Stabilator, outboard, aft	2	
-12	63561-05		* SPAR - Stabilator, main	1	
-13	63562-00		* CAP - Stabilator, spar	2	
-14	63569-00		* RIB - Stabilator, nose	2	
-15	63570-00		* RIB - Stabilator, aft	2	
-16	63571-00		* RIB - Stabilator	2	
-16a	63571-00	A	* RIB - Stabilator	2	
	63571-02	B	* RIB - Stabilator	2	
-17	63566-03		* STIFFENER - Stabilator, top, left	1	
	63566-02		* STIFFENER - Stabilator, top, right	1	
-18	63566-02		* STIFFENER - Stabilator, bottom, left	1	
	63566-03		* STIFFENER - Stabilator, bottom, right	1	
-19	63567-00		* FITTING - Balance weight attachment	2	
	63567-03	C	* FITTING - Balance weight attachment	AR	
-20	63563-00		* FITTING - Stabilator hinge	2	
-21	63564-00		* ANGLE - Stabilator	2	
-22	63565-02		* CLOSURE	1	
-23	63560-02		* HINGE - Extruded, outboard	2	
-24	63560-03		* HINGE - Extruded, inboard and center	4	
-25	400 003		* BOLT - (AN4-6A) Inboard	4	
	407 565		* WASHER - (AN960-416)	8	
	404 888		* NUT - (MS20365-428)	4	
-26	400 004		* BOLT - (AN4-7A) Outboard	4	
	407 565		* WASHER - (AN960-416)	8	
	404 888		* NUT - (MS20365-428)	4	

When ordering, always specify Part Number, Description, and Serial Number of Aircraft

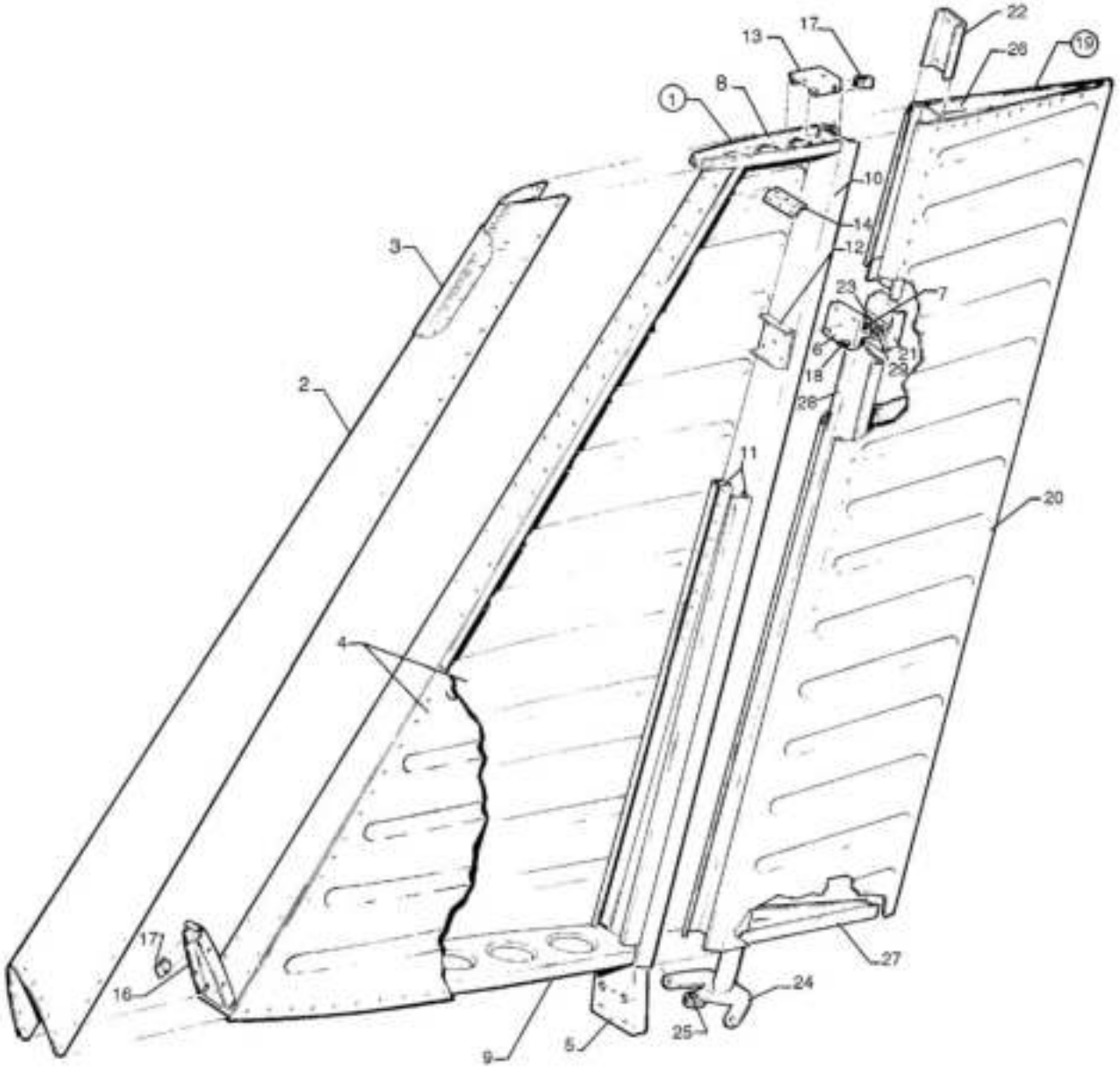

Figure 47. Fin and Rudder Assemblies

CODE EXPLANATIONS FOR FIGURE 47

A - Used on PA-32-260 and PA32-300 only.
B - Used on PA-32R-300 only.
C - Used on PA-32S-300 Seaplane Model only.

PIPER PARTS CATALOG

Figure and Index Number	Part Number	Code	NOMENCLATURE	No. Req.	SERIAL NUMBERS AFFECTED
47-1	66975-03	A	FIN ASSEMBLY	1	
	66975-04	B	FIN ASSEMBLY	1	
-2	63513-00	B	* SKIN - Leading edge, fin	1	
	66964-00	A	* SKIN ASSEMBLY - Leading edge, fin	1	
-3	66964-02	A	* * COVER - Air vent	1	
-4	63398-00		* SKIN - Fin, left	1	
	63398-01		* SKIN - Fin, right	1	
-5	63501-03		* FITTING - Fin root	1	
-6	63502-00		* HINGE ASSEMBLY - Fin	1	
-7	452 387		* * BEARING - (KP3A)	1	
-8	66972-00		* RIB ASSEMBLY - Fin nose	1	
-9	63506-00		* RIB - Fin root	1	
-10	63504-00		* SPAR - Fin rear	1	
-11	65034-00		* STIFFENER - Fin spar, left	1	
	65034-01		* STIFFENER - Fin spar, right	1	
-12	63509-00		* DOUBLER ASSEMBLY - Fin	1	
-13	63515-00		* BRACKET - Fin antenna	1	
-14	63510-00		* CLIP - Fin	1	
-15			* DELETED		
-16	79268-00		* RIB - Fin nose	1	
-17	477 672		* NUT - (MU-832-.38-.025x.050-L-F10)	12	
-18	401 266		* BOLT - (AN3-5A)	4	
	690 609		* WASHER - (NAS1149F0332P)	4	
-19	65342-02		RUDDER ASSEMBLY	1	
-20	63396-02		* SKIN - Rudder	1	
-21	63395-00		* DOUBLER ASSEMBLY - Rudder hinge	1	
-22	65341-00		* DOUBLER - Rudder top	1	
-23	63550-00		* FITTING - Rudder hinge	1	
	65388-32	C	* FITTING - Rudder hinge	1	32S-40000 to 32S-7240147 incl.
-24	63546-00		* HORN ASSEMBLY - Rudder	1	
	65388-31	C	* HORN ASSEMBLY - Rudder	1	32S-40000 to 32S-7240147 incl.
-25	452 387		* * BEARING - (KP3A)	1	
-26	63545-00		* RIB - Rudder tip	1	
-27	63544-00		* RIB - Rudder root	1	
-28	63543-00		* SPAR - Rudder	1	
-29	400 438		* BOLT - (AN3-4A)	2	
	690 609		* WASHER - (NAS1149F0332P)	2	

1L22 THRU 1L24
INTENTIONALLY LEFT BLANK

2A1 THRU 2A5
INTENTIONALLY LEFT BLANK

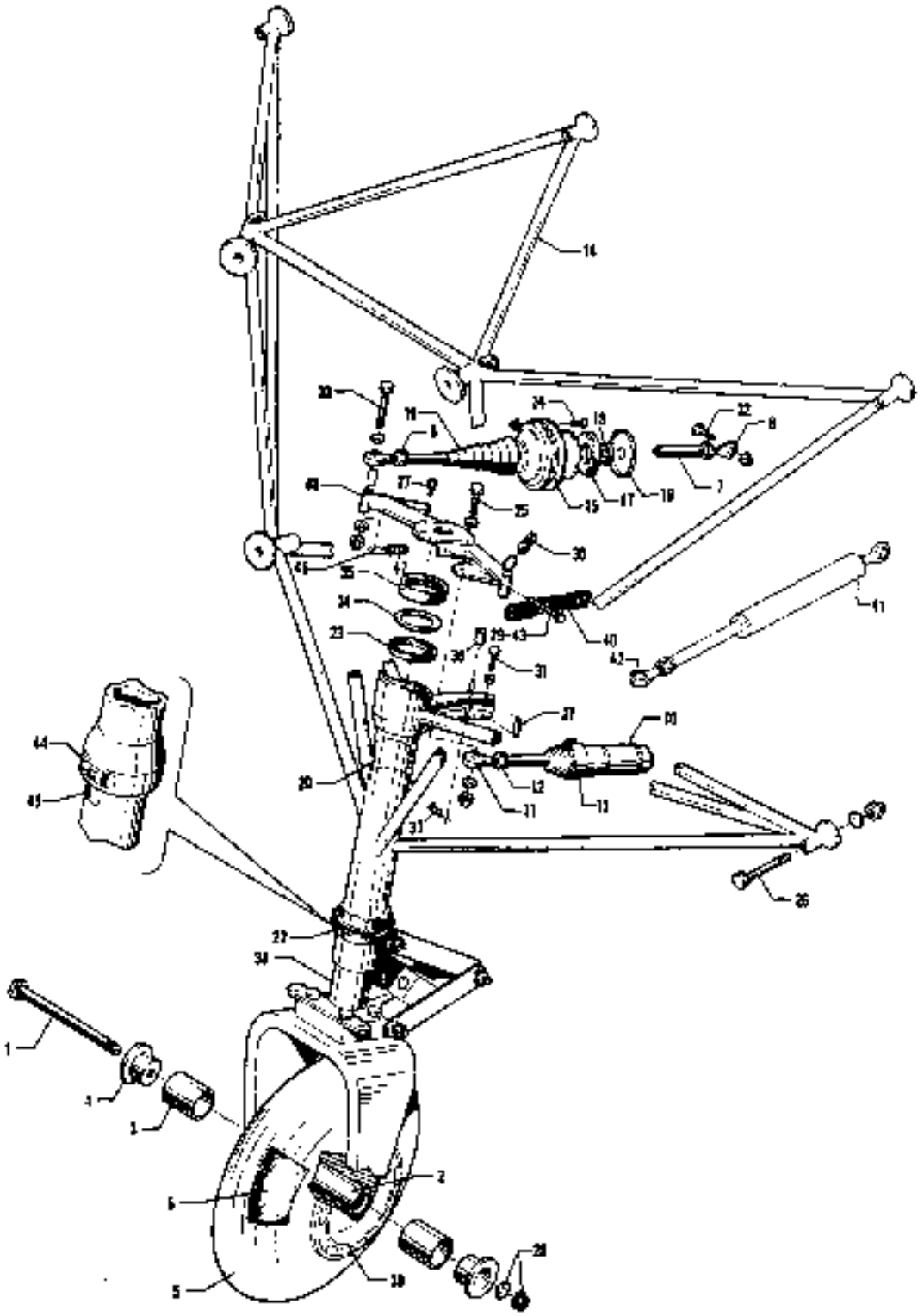

Figure 48 Nose Gear Installation

CODE EXPLANATIONS FOR FIGURE 48

A - Used with Cleveland Model 38501 Nose Wheel Assembly only.
B - Used with Cleveland Models 40-76B or 40-76F or 40-56 Wheel Assemblies only.
C - Used on PA-32-260 with serial numbers 32-1 to 32-7300076 inclusive and PA-32-300 with serial numbers 32-40000 to 32-7340201 inclusive.
D - Used on PA-32-260 with serial numbers 32-7400001 and up and PA-32-300 with serial numbers 32-7440001 and up.
E - See Figure 52 for component parts.
F - Used on PA-32-260 with serial numbers 32-700030 and up and PA-32-300 with serial numbers 32-7340101 and up. Ascertain vendor part number stamped on nameplate of wheel assembly before ordering.
G - Used if nose wheel fairing is not installed.
H - Used on PA-32-260 with serial numbers 32-1 to 32-7200029 inclusive and PA-32-300 with serial numbers 32-40000 to 32-7240100 inclusive. Part is no longer available. Order Wheel Assembly, P/N 551 766, and two Spacer Bushings, P/N 66618 02, when replacing Model No. 38501 Wheel. Order P/N 551 766 Wheel Assembly only if Model 40-76B or 40-76F has been previously installed.
J - See figure 49 for component parts.
K - Used on PA-32-260 with serial numbers 32-1 to 32-1110 inclusive and PA-32-300 with serial numbers 32-40000 to 32-40565 inclusive.
L - Used on PA-32-260 with serial numbers 32-1111 to 32-7300076 inclusive, 32-7500001 and up and PA-32-300 with serial numbers 32-40566 to 32-7340201 inclusive, 32-7540001 and up.
M - Used on PA-32-260 with serial numbers 32-7400001 to 32-7400061 inclusive, and PA-32-300 with serial numbers 32-7440001 to 32-7440182 inclusive.
N - See Figure 52A for component parts.
O - Used with McCauley Model D-30625 and D 30665 Wheel Assemblies only.
P - Used on PA-32-260 with serial numbers 32-7800001 and up and PA-32-300 with serial numbers 32-7840001 and up.
Q - Used on PA-32-260 with serial numbers 32-1 to 32-7700023 inclusive and PA-32-300 with serial numbers 32-40000 to 32-7740113 inclusive.
R - Used on PA-32-260 with serial numbers 32-1 to 32-7800006 inclusive and PA 32 300 with serial numbers 32-40000 to 32-7840101 inclusive.
S - Used on PA 32 260 with serial numbers 32 7800007 and up and PA-32-300 with serial numbers 32-7840102 and up.
T - Used if shock absorber is stamped with Monroe part number 18756.
U - Reference latest revision to Piper Service Letter 708, applicable to PA-32-260 with serial numbers 32-7400001 and up, and PA-32-300 with serial numbers 32-7440001 and up. If holes are found to be elongated, order new steering horn, P/N 69768-00. Should looseness be present at other locations depicted in the service letter, Nose Gear Steering Modification Kit 760-863 must be installed.
V - Reference latest revision to Piper Service Letter 732, applicable to PA-32-260 with serial numbers 32-7400001 to 32-7400050 incl. and PA-32-300 with serial numbers 32-7440001 to 32-7440160 incl.

PIPER PARTS CATALOG

Figure and Index Number	Part Number	Code	NOMENCLATURE	No. Req.	SERIAL NUMBERS AFFECTED
t48-	68008	C	DRAWING - Nose Gear Installation		
	69769	D	DRAWING - Nose Gear Installation		
-1	401 456		BOLT - Axle (AN6-76A)	1	
-2	86062-56		TUBE - Axle, nose wheel	1	
-3	66618-00	A	TUBE - Spacer, nose wheel	2	
	66618-02	O	TUBE - Spacer, nose wheel	2	
	66618-03	B	TUBE - Spacer, nose wheel	2	
-4	35158-02		PLUG - Axle	2	
-5	761 994		TIRE - (6.00 x 6, 4 ply, Type III) McCreary Airhawk	1	
	761 970		TIRE - (6.00 x 6, 4 ply, Type III) B.F. Goodrich	1	
	451 724		TIRE - (6.00 x 6, 6 ply, Type III) McCreary Airhawk	1	
	761 972		TIRE - (6.00 x 6, 6 ply, Type III) B.F. Goodrich	1	
-6	451 735		TUBE - Tire (6.00 x 6)	1	
-7	63327-06	C	ROD ASSEMBLY - Nose wheel control	2	
-8	452 334	C	* BEARING - Rod end (PS10020-1-6RX)	2	
-9	404 225	C	* NUT - (AN315-4R)	2	
-10	456 018	C	DAMPENER ASSEMBLY - Shimmy (PS50152-8)	1	
-11	452 334	C	* BEARING - Rod end (PS10020-1-6RX)	1	
	452 860	D	* BEARING - Rod end (PS10020-1-2RX)	1	
-12	404 225		* NUT - (AN315-4R)	1	
	407 136		* WASHER - (AN936-A416)	1	
-13	66750-00	T	CLAMP ASSEMBLY - Shimmy dampener	1	
-14	68710-00		MOUNT ASSEMBLY - Engine and nose gear strut	1	
-15	63910-00	C	HOUSING - Seal ring retainer	4	
	35284-02	D	HOUSING - Seal ring retainer	4	
-16	63911-00	C	HOUSING - Seal ring retainer	4	
	35283-00	D	HOUSING - Seal ring retainer	4	
-17	63925-00	C	RING - Retainer	2	
	35282-00	D	RING - Retainer	2	
-18	63656-00	C	RING - Packing	2	
	63656-02	D	RING - Packing	2	
-19	453 158	C	BOOT - (F2131)	2	
	35270-00	D	BOOT - Nose wheel bungee	2	
-20	65368-00		PLACARD - Oleo service instruction (decal)	1	
-21	63900-41		BUSHING - Shimmy dampener bracket	1	
-22	452 332		BEARING - Main (KP-338)	1	
-23	452 333		BEARING - Main (B5-45)	1	
-24	415 737		SCREW - (AN515-632R6)	6	
	404 909		NUT - (MS20365-632C)	6	
-25	400 443	C	BOLT - (AN3-12A)	1	
	401 312	D	BOLT - (AN4-12A)	1	
	407 564	C	WASHER - (AN960-10)	5	
	407 565	D	WASHER - (AN960-416)	6	
	404 887	C	NUT - (MS20365-1032C)	1	
	404 888	D	NUT - (MS20365-428C)	1	
-26	401 405		BOLT - (AN6-25A)	5	
	407 567		WASHER - (AN960-616)	AR	
	407 887		NUT - (PS10062-8-624C)	5	
-27	401 918		BOLT - (AN74-A3)	1	
-28	407 567		WASHER - (AN960-616)	2	
	404 838		NUT - (MS20364-624C)	1	
-29	424 230	C	PIN - Flat head (AN394-73)	1	
	407 588	C	WASHER - (AN960-PD416L)	1	
	424 095	C	COTTER PIN - (AN380-C-2-2)	1	
-30	402 775		BOLT - (NAS428-4-12)	2	
	404 322		NUT - (AN316-4R)	2	

When ordering, always specify Part Number, Description, and Serial Number of Aircraft

PIPER PARTS CATALOG

Figure and Index Number	Part Number	Code	NOMENCLATURE	No. Req.	SERIAL NUMBERS AFFECTED
48-31	400 058		BOLT - (AN3-13)	1	
	407 584		WASHER - (AN960-10L)	2	
	404 392		NUT - (AN320-3)	1	
	424 051		COTTER PIN - (MS24665-132)	1	
-32	400 441	C	BOLT - (AN3-7A)	2	
	401 274	D	BOLT - (AN3-15A)	2	
	407 584	D	WASHER - (AN960-10L)	2	
	404 887		NUT - (MS20365-1032C)	2	
-33	400 453	Q	BOLT - (AN3-21A)	2	
	400 450	P	BOLT - (AN3-17A)	2	
	407 564		WASHER - (AN960-10)	4	
	404 887		NUT - (MS20365-1032C)	2	
	62833-07	Q	WASHER - (O.D. - 63, I.D. 19 x .32)	4	
	63900-108		BUSHING	2	
-34	85012-72		WASHER	1	
-35	13071-00		NUT	1	
-36	63900-138		BUSHING - (1/2 O.D	1	
	95061-129	V	BUSHING - (3/4 O.D)	1	
-37	--- ---	C	PIN - Flat head (AN394-59)	1	
	424 226	D	PIN - Flat head (MS20392-3C59)	1	
	407 585		WASHER - (AN960-416L)	1	
	690 613		WASHER - (NAS1149F0432P)	1	
	424 051		COTTER PIN - (MS24665-132))	1	
-38	65010-03	J,K	STRUT ASSEMBLY - Nose gear	1	
	69540-02	J,L	STRUT ASSEMBLY - Nose gear	1	
	69770-05	J,M	STRUT ASSEMBLY - Nose gear	1	
-39	451 755	E,H	WHEEL ASSEMBLY - Nose (Cleveland 38501)	1	
	551 766	E,F	WHEEL ASSEMBLY - Nose (Cleveland 40-76F)	1	
	551 785	E,F	WHEEL ASSEMBLY - Nose (Cleveland 40-56B)	1	
	551 773	N,R	WHEEL ASSEMBLY - Nose (McCauley D-30625)	1	
	551 779	N,S	WHEEL ASSEMBLY - Nose (McCauley D-30665)	1	
-40	67168-00	G,Q	SPRING - Nose gear	2	
-41	38151-03	D	TUBE ASSEMBLY - Nose wheel	2	
-42	452 334	D	* BEARING - (PS10020-1-6RX)	1	
-43	402 324	D	BOLT - (AN174-25A)	1	
	404 836	D	NUT - (MS20364-428C)	1	
-44	35669-06		PLACARD - Turn limit	1	
-45	35669-05		PLACARD - Turn limit center mark	1	
-46	37929-02	G,P	SPRING - Nose gear	2	
-47	37932-02	G,P	LINK - Nose gear spring	2	
-48	65047-00	C	HORN ASSEMBLY - Nose wheel steering	1	
	69768-00	D,U	HORN ASSEMBLY - Nose wheel steering	1	

When ordering, always specify Part Number, Description, and Serial Number of Aircraft

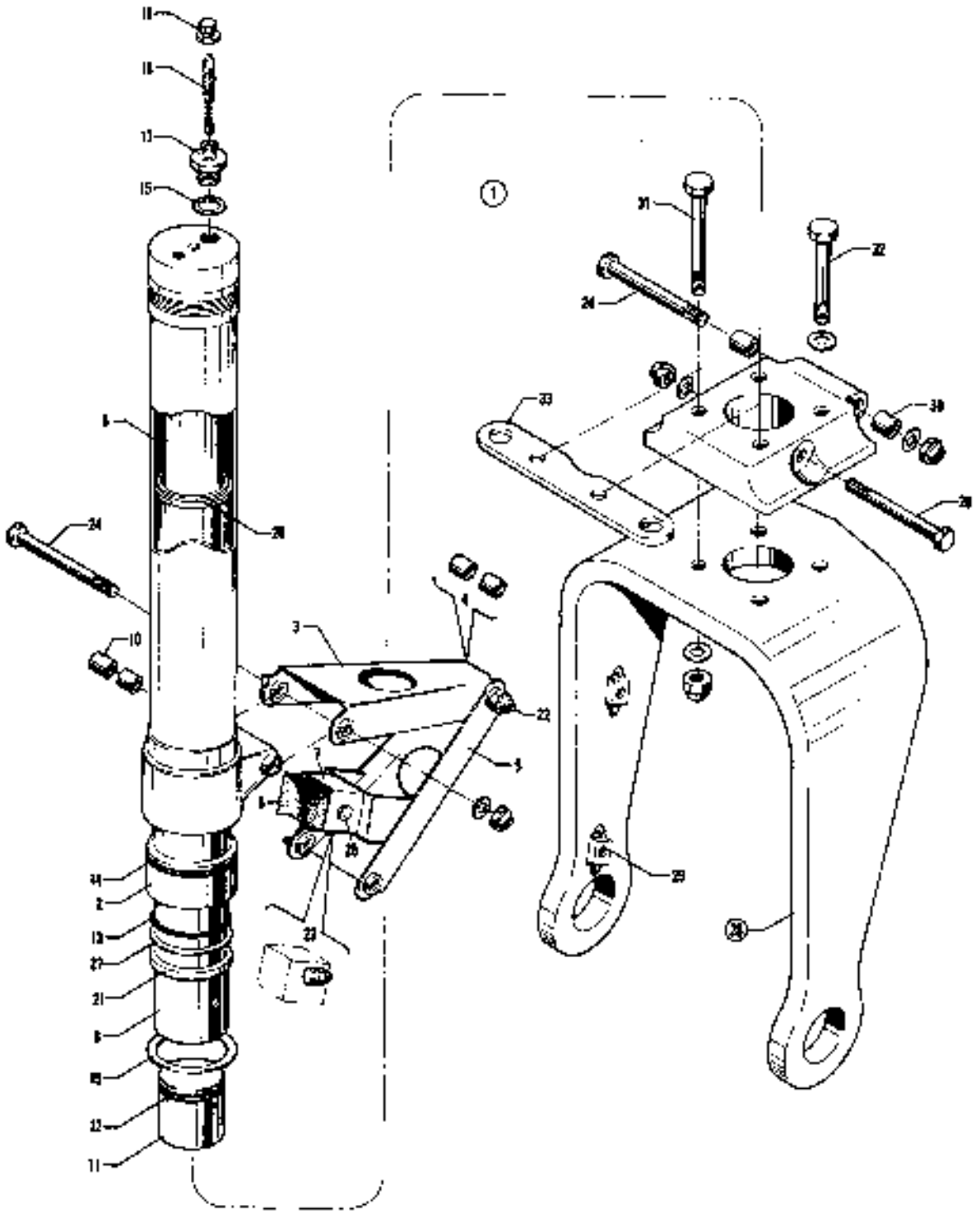

Figure 49 Nose Gear Strut Assembly

CODE EXPLANATIONS FOR FIGURE 49

A - Used on PA-32-260 with serial numbers 32-1 to 32-1110 incl., and PA-32-300 with serial numbers 32-40000 TO 32-40565 incl.
B - Used on PA-32-260 with serial numbers 32-1111 and up, and PA-32-300 with serial numbers 32-40566 and up.
C - Used on PA-32-260 with serial numbers 32-1 to 32-7300076 incl., and PA-32-300 with serial numbers 32-40000 to 32-7340201 incl.
D - Used on PA-32-260 with serial numbers 32-7400001 and up, and PA-32-300 with serial numbers 32-7440001 and up.
E - Used on PA-32-260 with serial numbers 32-1111 to 32-7300076 incl. 32-7500001 and up, and PA-32-300 with serial numbers 32-40565 to 32-7340201 incl., 32-7540001 and up.
F - Used on PA-32-260 with serial numbers 32-7400001 to 32-7400061 incl., and PA-32-300 with serial numbers 32-740001 to 32-7440182 incl.
G - Before ordering tube assembly, ascertain if the top of the sleeve bearing (item no. 2) incorporates a .20 inch long by .028 inch deep chamfer in the outer diameter. If the chamfer does not exist, also order a new sleeve bearing P/N 66843-02.

PIPER PARTS CATALOG

Figure and Index Number	Part Number	Code	NOMENCLATURE	No. Req.	SERIAL NUMBERS AFFECTED
49-	68008	C	DRAWING - Nose Gear Installation		
	69769	D	DRAWING - Nose Gear Installation		
-1	65010-03	A	STRUT ASSEMBLY - Nose gear	1	
	69540-02	E	STRUT ASSEMBLY - Nose gear	1	
	69770-05	F	STRUT ASSEMBLY - Nose gear	1	
-2	66843-02		* BEARING - Sleeve	1	
-3	13074-02		* LINK ASSEMBLY - Nose wheel, upper	1	
-4	452 766		* * BEARING - (P32-4)	2	
-5	65413-00		* LINK ASSEMBLY - Nose wheel, lower	1	
-6	79072-00		* BLOCK - Nose wheel bumper	1	
-7	79071-00		* BRACKET ASSEMBLY - Nose wheel bumper block	1	
-8	65280-00	A	* TUBE - Inner, lower	1	
	69537-00	B	* TUBE - Inner, lower	1	
-9	65007-03	A,G	* TUBE ASSEMBLY - Outer, upper	1	
	69538-03	B,G	* TUBE ASSEMBLY - Outer, upper	1	
-10	452 766		* * BEARING - (P32-4)	2	
-11	15206-02	A	* PLUG - Nose wheel oleo piston tube	1	
	69535-00	B	* PLUG - Nose wheel oleo piston tube	1	
-12	484 733	A	* RING - “O,” Piston tube (15207-00)	1	
	484 800	B	* RING - “O,” Piston tube (MS28775-211)	1	
-13	484 698		* PACKING - “O” Ring (AN6227-27)	1	32-1 to 32-505 inclusive
	484 770		* PACKING - Quad ring (4222)	1	32-506 and up
-14	484 796		* PACKING - “O” ring (MS28775-224)	1	
-15	462 024		* GASKET - Air valve (AN901-5A)	1	
-16	455 124		* CORE - Air valve (AN809-1)	1	
-17	453 124		* VALVE - Air (AN812-1)	1	
-18	454 053		* CAP - Air valve (AN813-1B)	1	
-19	484 705		* RING - Retaining (5000-200)	1	
-20	484 720		* SNAP RING - (3478)	1	
-21	187 625		* STRIP - Wiper (10V70) (5-1/4” L)	1	
-22	401 360		* BOLT - (AN5-21A)	1	
	407 566		* WASHER - (AN960-516)	1	
	404 889		* NUT - (MS20365-524C)	1	
-23	400 438		* BOLT - (AN3-4A)	1	
	407 564		* WASHER - (AN960-10)	1	
	404 887		* NUT - (MS20365-1032C)	1	
-24	401 370		* BOLT - (AN175-31A)	2	
	407 566		* WASHER - (AN960-516)	2	
	404 889		* NUT - (MS20365-524C)	2	
-25	401 273		* BOLT - (AN3-14A)	1	
	404 887		* NUT - (MS20365-1032C)	1	
-26	401 330	A	* BOLT - (AN4-32A)	1	
	401 371	B	* BOLT - (AN5-32A)	1	
	407 565	A	* WASHER - (AN960-416)	1	
	407 566	B	* WASHER - (AN960-516)	1	
	404 888	A	* NUT - (MS20365-428C)	1	
	404 889	B	* NUT - (MS20365-524C)	1	
-27	494 025		* WASHER - Back-up (AN6246-27)	1	

When ordering, always specify Part Number, Description, and Serial Number of Aircraft

PIPER PARTS CATALOG

Figure and Index Number	Part Number	Code	NOMENCLATURE	No. Req.	SERIAL NUMBERS AFFECTED
49-28	65010-04	A	FORK ASSEMBLY - Nose wheel (with block assembly)	1	
	69540-03	E	FORK ASSEMBLY - Nose wheel (with block assembly)	1	
	69770-06	F	FORK ASSEMBLY - Nose wheel (with block assembly)	1	
-29	406 830	D	* NUT - Anchor (NAS686A4)	4	
-30	452-766		* BEARING - (P32-4)	2	
-31	401 403		* BOLT (AN6-26A)	2	
	407 587		* WASHER - (AN960-616L)	2	
	404 890		* NUT - (MS20365-624C)	2	
-32	401 400		* BOLT - (AN6-20A)	2	
	407 587		* WASHER - (AN960-616L)	4	
	404 890		* NUT - (MS20365-624C)	2	
-33	65276-00		LINK - Tow bar	1	

When ordering, always specify Part Number, Description, and Serial Number of Aircraft

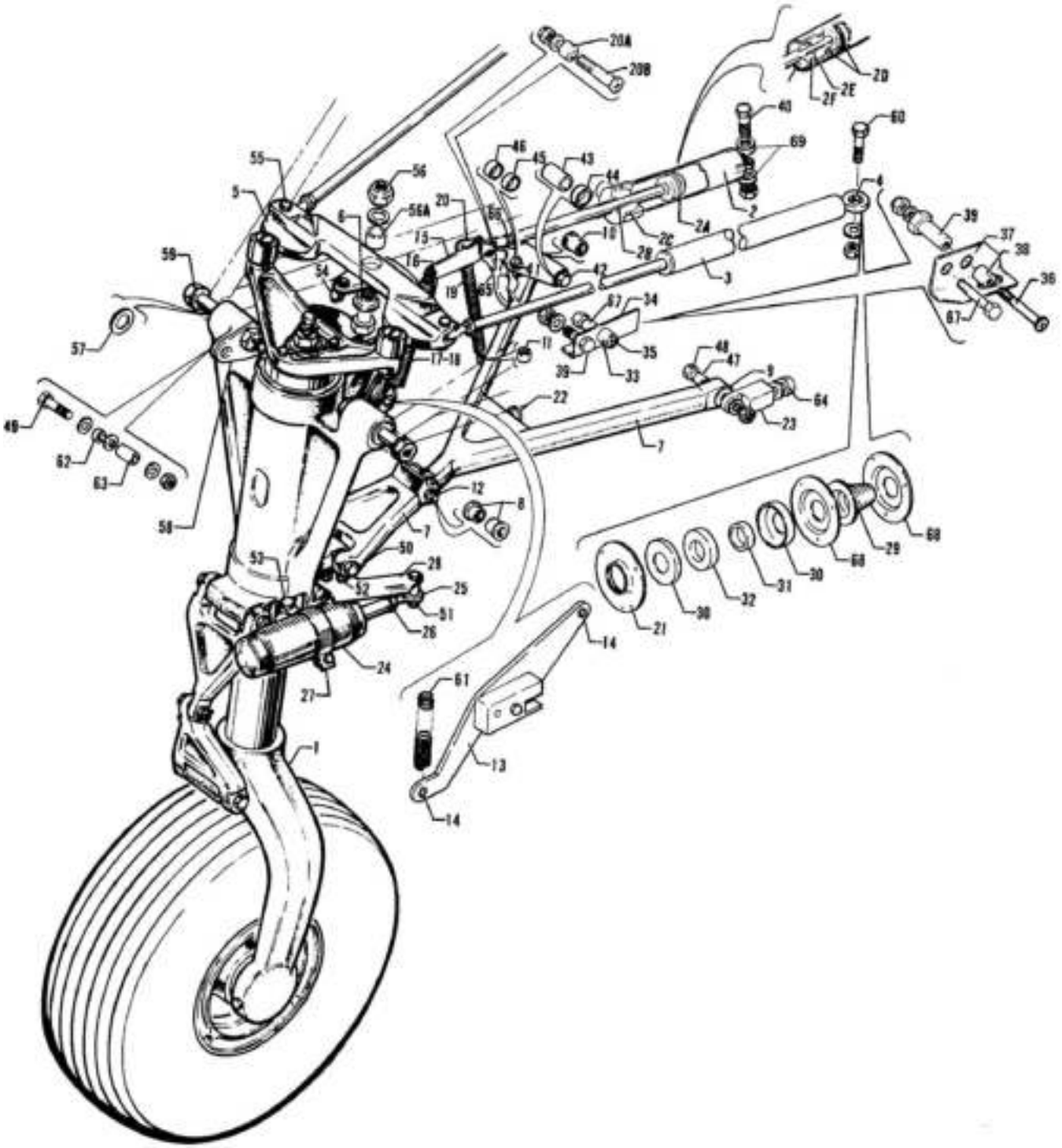

Figure 50. Nose Gear Installation

CODE EXPLANATIONS FOR FIGURE 50

A - See Figure 51 for component parts.
B - Used on serial numbers 32R-7680474 to 32R-7780104 inclusive. Also used on serial numbers 32R-7680001 to 32R-7680473 inclusive if Nose Gear Trunnion Modification Kit 761 074 has been installed per Service Bulletin 510.
C - Used if Nose Gear Downlock Eccentric Bushing is not installed.
D - Used if Nose Gear Downlock Eccentric Bushing is not installed.
E - Used with Gar-Kenyon hydraulic cylinder P/N 94951 only.
F - Used with Syncro Devices Inc. hydraulic cylinder SFA231-3 only.
G - Also used on aircraft with serial numbers 32R-7680001 to 32R-7780095 inclusive if Engine Mount Downlock Bearing Modification Kit 763-844 has been installed per Piper Service Bulletin 593.
H - Order part for serial numbers 32R-7780096 and up if Engine Mount Downlock Bearing Modification Kit 763-844 has been installed per Piper Service Bulletin 593 - latest revision.
J - Used if shock absorber is stamped with Monroe part No. 18737.
K - Reference latest revision to Piper Service Letter 927, applicable to PA-32R-300 with serial numbers 32R-7680001 to 32R-7880068. Installation of Nose Landing Gear Modification Kit 764-135 will reduce the possibility of damage that may occur to nose landing gear downlock hooks during motorized towing and rough field operations.
L - Reference latest revision to Piper Service Bulletin 563, applicable to PA-32R-300 with serial numbers 32R-7780255 to 32R-7780294 inclusive, 32R-7780296 and 32R-7780298, which calls for installation of an improved nose landing gear actuator rod end bearing, part number 452 357, which has been superceded by P/N 452-334 as of June 27, 1977.
M - Reference latest revision to Piper Service Bulletin 747, applicable to PA-32R-300, which calls for the replacement of nose landing gear actuator bolt and spacer bushings.
N - Reference latest revision to Piper Service Bulletin 738, Part II.

PIPER PARTS CATALOG

Figure and Index Number	Part Number	Code	NOMENCLATURE	No. Req.	SERIAL NUMBERS AFFECTED
50-	38040		DRAWING - Nose Gear Installation		
-1	67100-07	A	GEAR ASSEMBLY - Nose (less tire, tube and wheel)	1	
-2	35797-05		CYLINDER ASSEMBLY - Hydraulic, nose gear	1	
-2a	752 595	E	* “O” Ring - (MS28775-120)	1	
-2b	752 585	E	* “O” Ring - (MS28775-110)	1	
-2c	752 596	E	* “O” Ring - (MS28775-122)	1	
-2d	755 996	F	* “O” Ring - (AN6227-18)	2	
-2e	484 748	F	* “O” Ring - (AN6227-8)	1	
	756 053	F	* RING - Back-up (MS28782-8)	1	
-2f	755 998	F	* RETAINER - Nose gear cylinder (MS16625-1118)	1	
-3	38151-00		ROD ASSEMBLY - Nose wheel steering	2	
-4	452 334	L	* BEARING - Steering rod (PS10020-1-6RX)	2	
-5	67155-00		CAM ASSEMBLY - Nose gear steering	1	
-6	452 445		* BEARING - Steering cam (FF-600-5)	1	
-7	38040-02	K	LINK AND BRACE ASSEMBLY - Gear downlock	1	
-8	87319-02		* BEARING - Upper drag brace	2	
-9	87319-03		* BEARING - Upper drag brace	1	
-10	87319-04		* BEARING - Upper drag brace	1	
-11	61402-93		* BUSHING - Upper drag brace	1	
-12	402 938		* BOLT-(NAS464P4-31)	1	
	690 611		* WASHER - (NAS114940463P)	2	
	404 393		* NUT - (AN320-4)	1	
	424 051		* COTTER PIN - (MS24665-132)	1	
-13	38232-04		ARM ASSEMBLY - Nose gear spring, forward	1	
-14	82732-99		* BUSHING - Nose gear arm	2	
-15	38234-00		ARM ASSEMBLY - Nose gear spring, aft	1	
-16	82732-99		* BUSHING - Nose gear arm	1	
-17	67168-00		SPRING - Nose gear arm, inner	1	
-18	67169-00		SPRING - Nose gear arm, outer	1	
-19	67189-00		SPRING - Nose gear downlock	1	
-20	38078-02		DOWNLOCK - Nose gear	1	
-20a	65003-30		* BUSHING - Downlock	1	
-20b	400 871		* BOLT - (AN23-19A)	1	
	690 612		* WASHER - (NAS1149F0363P)	1	
	404 526		* NUT - (MS21042-3)	1	
-21	38065-00		PLATE - Bungee seal	2	
-22	37970-05		STOP ASSEMBLY - 5/16 - 18 thread	1	32R-7680001 to 32R-7780126
	37970-02		STOP - 5/16 - 18 thread	1	32R-7780127 and up
-23	38041-02		FITTING - Upper drag brace	2	
-24	456 016		DAMPENER ASSEMBLY - Nose wheel shimmy (PS50152-6)	1	
-25	453 123		* BOLT - Eye, shimmy dampener (11601-03)	1	
-26	404 322		* NUT - Shimmy dampener (AN316-4R)	1	
-27	67244-00	J	CLAMP ASSEMBLY - Shimmy dampener	1	
-28	67114-00		BRACKET ASSEMBLY - Shimmy dampener	1	
-29	35270-00		BOOT - Nose wheel bungee	2	
-30	35283-00		HOUSING - Bungee seal	4	
-31	63656-02		PACKING - Bungee seal	2	
-32	35282-00		RING - Bungee seal	2	
-33	38068-00	H	BEARING - Downlock	1	32R-7680001 to 32R-7780095
-34	38174-00	H	CLIP ASSEMBLY - Support, nose gear door	1	32R-7680001 to 32R-7780095
-35	410 013	C,H	SCREW - (MS24694-S75)	1	32R-7680001 to 32R-7780095
	410 011	D,H	SCREW - (MS24694-S79)	1	32R-7680001 to 32R-7780095
	690 609	H	WASHER - (NAS1149F0332P)	1	32R-7680001 to 32R-7780095
	404 526	H	NUT - (MS21042-3)	1	32R-7680001 to 32R-7780095

When ordering, always specify Part Number, Description, and Serial Number of Aircraft

PIPER PARTS CATALOG

Figure and Index Number	Part Number	Code	NOMENCLATURE	No. Req.	SERIAL NUMBERS AFFECTED
50-36	410 011	G	SCREW - (MS24694 S79)	1	32R-7780096 and up
	690 609	G	WASHER - (NAS1149F0332P)	1	32R-7780096 and up
	404 526	G	NUT (MS21042-3)	1	32R-7780096 and up
-37	38174-04	G	CLIP ASSEMBLY - Support nose gear		
-38	38068-02	G	BEARING - Downlock	1	32R-7780096 and up
-39	35662-02	G	BUSHING - Eccentric	1	32R-7780096 and up
-40	402 869	M	BOLT - (NAS 464-P3-A13)	1	
	86700-46	M	BUSHING	2	
	690 612		WASHER - (NAS1149F0363P) (under nut)	AR	
	404 526		NUT (MS21042-3)	1	
-41	402 315		BOLT (AN174 15)	1	
	690 664		WASHER (NAS1149C0463R)	1	
	404 101		NUT (AN310-4)	1	
	424 095		COTTER PIN - (MS24665-151)	1	
-42	400 229		BOLT (AN6 36)	1	
	62833-43		WASHER - (I.D. 375)	1	
	62833-107		WASHER - (I.D. 500) Teflon	1	
	690 629		WASHER (NAS1149F0663P)	1	
	404 123		NUT (AN310 C6)	1	
	424 061		COTTER PIN (MS24665 287)	1	
-43	95061-133		BUSHING	1	
-44	95061-134		BUSHING	1	
-45	95061 135		BUSHING	1	
-46	95061-136		BUSHING	1	
-47	65003-45		BUSHING	1	
-48	400 220		BOLT - (AN6-27)	1	
	62833-43		WASHER (I.D. 374)	1	
	62833-87		WASHER (I.D. 437) Teflon	1	
	690 629		WASHER (NAS1149F0663P)	1	
	404 123		NUT (AN310-C6)	1	
	424 061		COTTER PIN (MS24665-287)	1	
-49	400 011		BOLT - (AN4-16A)	1	
	401 318	B	BOLT (AN4-20A)	1	
	62833-64		WASHER	2	
	690 613		WASHER (NAS1149F0432P)	1	
	404 530		NUT (MS21042-4)	1	
-50	400 192		BOLT - (AN5-52)	1	
	690 619		WASHER (NAS1149F0532P)	2	
	690 628		WASHER (NAS1149F0563P)	1	
	404 102		NUT - (AN310-5)	1	
	424 052		COTTER PIN (MS24665 134)	1	
-51	400 108		BOLT (AN4-13)	1	
	690 611		WASHER (NAS114940463P)	2	
	690 613		WASHER (NAS1149F0432P)	2	
	404 101		NUT - (AN310-4)	1	
	424 051		COTTER PIN (MS24665-132)	1	
-52	400 440		BOLT - (AN3 6A)	2	
	690 612		WASHER - (NAS1149F0363P) (under nut)	2	
	404 526		NUT (MS21042-3)	2	
-53	400 112		BOLT (AN4-17)	1	
	690 613		WASHER (NAS1149F0432P)	4	
	404 101		NUT - (AN310-4)	1	
	424 051		COTTER PIN (MS24665-132)	1	
-54	411 349		SCREW (M35FS428R14CR nylon insert)	1	
	14976-15		BUSHING - (O.D. 625) Outer	1	
	14976-16		BUSHING - (O.D. 375) Inner	1	
-55	401 269		BOLT - (AN3-10A)	2	
	404 526		NUT - (MS21042-3)	2	
	690 612		WASHER - (NAS1149F0363P)	2	

When ordering, always specify Part Number, Description, and Serial Number of Aircraft

PIPER PARTS CATALOG

Figure and Index Number	Part Number	Code	NOMENCLATURE	No. Req.	SERIAL NUMBERS AFFECTED
50-56	400 761		BOLT - (AN26-5)	1	32R-7680001 and up
	408 106		WASHER - (MS35335-35)	1	
	62833-10		WASHER	1	
	404 532		NUT - (MS21042-6)	1	
-56a	65003-15		BUSHING	1	
-57	690 630		WASHER - (NAS1149F0763P)	AR	
-58	38261-02	B	PLATE - Nose gear trunnion downlock	1	
-59	400 279		BOLT - (AN7-42)	2	
	407 591		WASHER - (AN960-716L)	2	
	404 124		NUT - (AN310-C7)	2	
	424 061		COTTER PIN - (MS24665-287)	2	
-60	401 274		BOLT - (AN3-15A)	2	
	690 609		WASHER - (NAS1149F0332P)	2	
	404 526		NUT - (MS21042-3)	2	
-61	67168-00		SPRING - Nose gear arm	1	
-62	82732-95		BUSHING	1	
-63	95061-129		BUSHING	1	
-64	401 302		BOLT - (AN4H-5A)	2	
	690 613		WASHER - (NAS1149F0432P)	2	
	151 296		SAFETY WIRE - (MS20995C32)	AR	
-65	452 729	N	BEARING - (PS10020-1-7RX)	1	
-66	67192-00		NUT - Cylinder rod end	1	
-67	400 443		BOLT - (AN3-12A)	3	
	690 609		WASHER - (NAS1149F0332P)	3	
	404 526		NUT - (MS21042-3)	3	
-68	35284-02		HOUSING - Bungee seal	4	
-69	690 612		WASHER - (NAS1149F0363P)	AR	
	690 609		WASHER - (NAS1149F0332P)	AR	

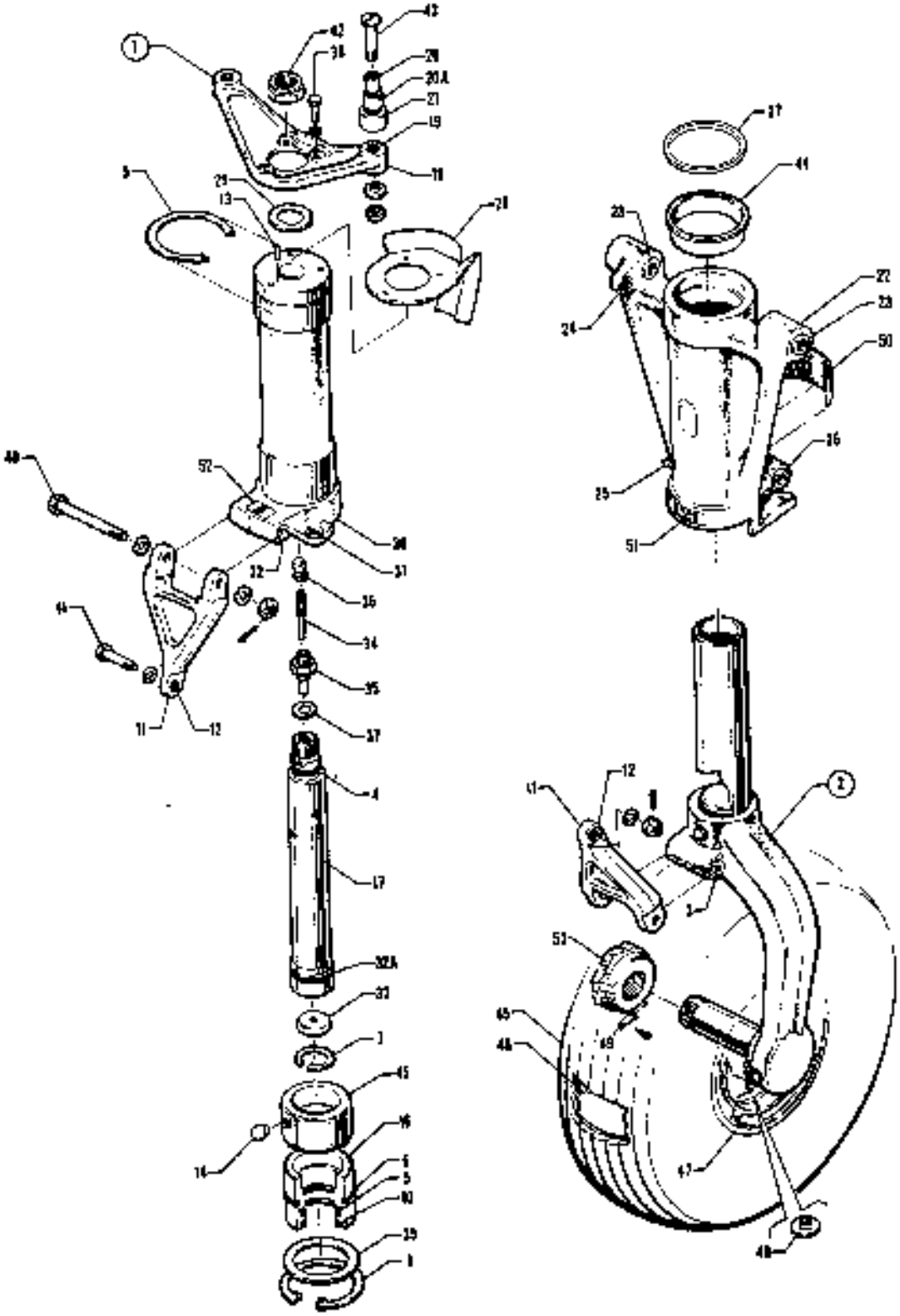

Figure 51 Nose Gear Assembly

CODE EXPLANATIONS FOR FIGURE 51

A - See Figure 52 for component parts.
B - See Figure 52B for component parts.
C - Used with mcCauley Nose Wheel only.
D - Ascertain I.D. of trunnion assembly hole before ordering bushings. if a 2.81 I.D. x .62 deep hole is reamed in both ends of trunnion assembly, bushings are required. If a 2.69 I.D. hole is reamed thru entire length of trunnion assembly, bushings are not required.

PIPER PARTS CATALOG

Figure and Index Number	Part Number	Code	NOMENCLATURE	No. Req.	SERIAL NUMBERS AFFECTED
51-	38040		DRAWING - Nose Landing Gear Installation		
-1	67100-07		GEAR ASSEMBLY - Nose (less tire, tube and wheel assembly)	1	
-2	67050-02		* STRUT ASSEMBLY - Nose gear, lower	1	
-3	67026-07		* * BEARING	2	
-4	484 790		* “O” RING - (MS28775-210)	1	
-5	484 799		* “O” RING - (MS28775-327)	1	
-6	462 034		* “O” RING - (AN6230-5)	1	
-7	484 684		* RING - Snap (N5000-118MD)	1	
-8	484 685		* RING - Snap (N5000-250MD)	1	
-9	484 723		* RING - Snap (5100-268)	1	
-10	187 627		* STRIP - Wiper (S-35-29 Code 10V90-117)	1	
-11	20735-05		* LINK ASSEMBLY - Nose gear torque	2	
-12	452 366		* * BEARING - (F-310-5)	1	
-13	480 700		* PIN - Roll (59-022-094-0375)	1	
-14	20784-00		* PIN - Bearing retaining	2	
-15	67909-00		* BEARING - Strut tube, upper	1	
-16	67755-00		* BEARING - Strut tube, lower	1	
-17	21712-02		* TUBE - Nose gear orifice	1	
-18	44386-03		* ARM ASSEMBLY - Nose wheel steering	1	
-19	14976-11		* * BUSHING - Arm assembly	2	
-20	63900-109		* BUSHING - Nose gear, inner	2	
-20a	452 477		* BEARING - Sleeve (AA-432-3)	2	
-21	63900-122		* BUSHING - Nose gear, outer	2	
-22	67054-03		* TRUNNION ASSEMBLY - Nose gear	1	
-23	452 447		* * BEARING - (FF602-5)	2	32R-7680001 to 32R-7780104
	67026-11		* * BEARING	4	32R-7780105 and up
-24	95061-144		* * BUSHING - Trunnion assembly	1	
-25	460 691		* * FITTING - Grease (AN944-101)	1	
-26	67026-07		* * BEARING	2	
-27	62833-45		* SPACER	AR	
-28	67107-00		* BRACKET - Nose gear aligner guide	1	
-29	21710-00		* WASHER - Nose gear lock	1	
-30	67148-00		* TUBE ASSEMBLY - Nose gear strut, upper	1	
-31	21831-04		* * BEARING - Tube assembly, nose gear strut	1	
-32	67026-07		* * BEARING	2	
-32a	484 828		* RING - Compression (R19047)	1	
-33	67245-00		* PLATE - Orifice	1	
-34	455 124		* CORE - Air valve (AN809-1)	1	
-35	453 124		* BODY - Air valve (AN812-1)	1	
-36	454 053		* CAP - Air valve (AN813-1B)	1	
-37	462 024		* GASKET - Air valve (AN901-5A)	1	
-38	401 265		* BOLT - (AN3H-7A)	3	
	407 564		* WASHER - (AN960-10)	3	
-39	80122-88		* WASHER - Nose gear	1	
-40	402 344		* BOLT - (AN175-32)	2	
	407 586		* WASHER - (AN960-516L)	2	
	404 102		* NUT - (AN310-5)	2	
	424 052		* COTTER PIN - (AN380-2-3)	2	
-41	402 313		* BOLT - (AN174-13)	1	
	407 585		* WASHER - (AN960-416L)	1	
	407 565		* WASHER - (AN960-416)	2	
	404 101		* NUT - (AN310-4)	1	
	424 052		* COTTER PIN - (AN380-2-3)	1	
-42	404 840		* NUT - (MS20364-1414C)	1	

When ordering, always specify Part Number, Description, and Serial Number of Aircraft

PIPER PARTS CATALOG

Figure and Index Number	Part Number	Code	NOMENCLATURE	No. Req.	SERIAL NUMBERS AFFECTED
61-43	400 744		* BOLT - (AN25-30A)	2	
	407 587	W	* WASHER - (AN960-516L)	AR	
	404 837	W	* NUT - (MS20364-524C)	2	
-44	67758-00	D	BUSHING - Trunnion assembly	2	
-45	451 734		TIRE - (5.00 x 5, 6 ply, Type III) McCreary	1	
	781 978	W	TIRE - (5.00 x 5, 6 ply, Type III) B. F. Goodrich (heavy duty)	1	
	451 752		TIRE - (5.00 x 5, 6 ply, Type III) McCreary (heavy duty)	1	
-46	451 739		TUBE - (5.00 x 5)	1	
-47	551 782	A	WHEEL ASSEMBLY - (40-778) Cleveland	1	
	551 772	B	WHEEL ASSEMBLY - (D-30500) McCauley	1	
-48	758 387	C	* BUSHING - Valve stem (A-30653)	1	
-49	424 146	W	PIN - (MS20392-1C19)	1	
	407 561	W	WASHER - (AN960-4)	1	
	424 052	W	COTTER PIN - (MS24665-134)	1	
-50	69669-89		PLACARD - Oleo service instructions	1	
-51	35888-08		PLACARD - Turn limit	1	
-52	35888-06		PLACARD - Turn limit center mark	1	
-53	67106-00		NUT - Nose gear axle	1	

2A23 THRU 2A24

INTENTIONALLY LEFT BLANK

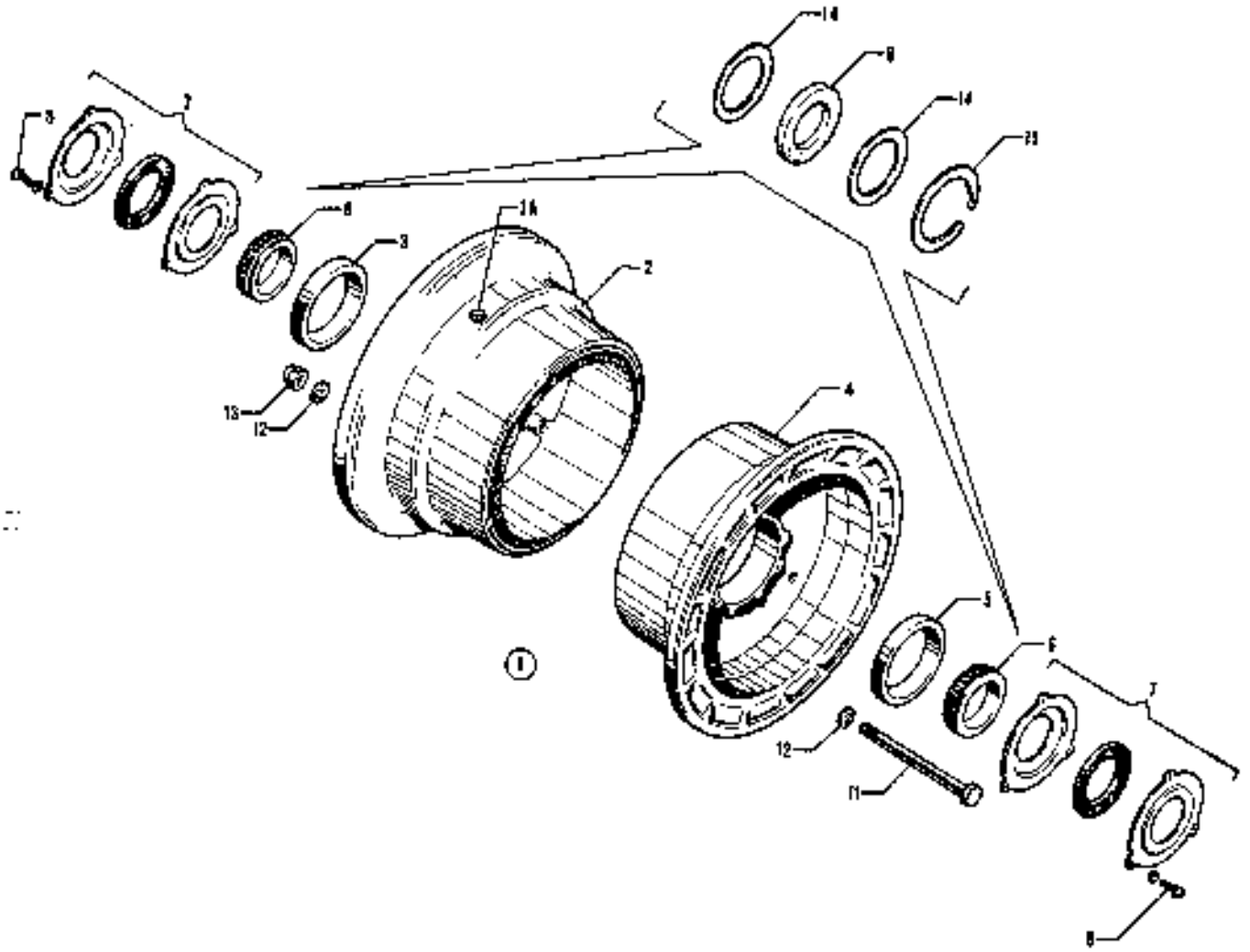

Figure 82. Nose Wheel Assembly (Cleveland)

CODE EXPLANATIONS FOR FIGURE 52

A - Used on PA-32-260 with serial numbers 32-1 to 32-7200029 inclusive, and PA-32-300 with serial numbers 32-40000 to 32-7240100 inclusive. Part is no longer available. Order Wheel Assembly part No. 551 766 and two spacer bushings, part number 66618-02 when replacing model No. 38501 Wheel. Order Part No. 551-766 Wheel only if Model 40-76B or 40-76F has previously been installed.
B - Used on PA-32-260 with serial numbers 32-7200030 and up, and PA-32-300 with serial numbers 32-7240101 and up. Ascertain vendor part number stamped on nameplate of wheel assembly before ordering.
C - Used on PA-32R-300 only.
D - Used on Model 38501 Wheel Assembly only.
E - Used on Model 40-76B or 40-76F Wheel Assembly only.
F - Used on Model 40-77B Wheel Assembly only.
G - Used with Model 40-56B Wheel Assembly only.
H - Reference latest revision to Piper Service Bulletin 428, applicable to PA-32-260 with serial numbers 32-7400001 to 32-7400050 inclusive and PA-32-300 with serial numbers 32-7440001 to 32-7440086 and 32-7440088 to 32-7440160. Installation of Kit 760-885 will provide more positive steering capabilities and reduce maintenance costs.

PIPER PARTS CATALOG

Figure and Index Number	Part Number	Code	NOMENCLATURE	No. Req.	SERIAL NUMBERS AFFECTED
52-1	451 755	A	WHEEL ASSEMBLY - Nose (Cleveland 38501)	1	
	551 766	B,H	WHEEL ASSEMBLY - Nose (Cleveland 40-76F)	1	
	551 785	B,H	WHEEL ASSEMBLY - Nose (Cleveland 40-56B)	1	
	551 792	C	WHEEL ASSEMBLY - Nose (Cleveland 40-77B)	1	
-2	753 128	D	* WHEEL HALF ASSEMBLY - Outer (3041A) with valve hole	1	
	756 665	E	* WHEEL HALF ASSEMBLY - Outer (162-45) with valve hole	1	
	763 718	G	* WHEEL HALF ASSEMBLY - Outer (162-69) with valve hole	1	
	756 667	F	* WHEEL HALF ASSEMBLY - Outer (162-53) with valve hole	1	
-3	751 494	D,E	* * CUP - Bearing (13836)	1	
	763 287	G	* * CUP - Bearing (LM29710)	1	
	757 831	F	* * CUP - Bearing (08231)	1	
-3a	755 048	F	* * GROMMET - (217-00100)	1	
-4	753 129	D	* WHEEL HALF ASSEMBLY - Inner (3045A)	1	
	756 666	E	* WHEEL HALF ASSEMBLY - Inner (161-47)	1	
	763 719	G	* WHEEL HALF ASSEMBLY - Inner (161-74)	1	
	756 668	F	* WHEEL HALF ASSEMBLY - Inner (161-55)	1	
-5	751 494	D,E	* * CUP - Bearing (13836)	1	
	763 287	G	* * CUP - Bearing (LM29710)	1	
	757 831	F	* * CUP - Bearing (08231)	1	
-6	751 489	D,E	* BEARING - Cone (13889)	2	
	753 448	G	* BEARING - Cone (LM29749)	2	
	758-733	F	* BEARING - Cone (08125)	2	
-7	752 882	D	* GREASE SEAL ASSEMBLY - (B39001)	2	
-8	756 129	D	* * SCREW - (8-32 x 1/2)	3	
	407 134	D	* * WASHER - (AN936A8)	3	
-9	754 804	F	* FELT - Grease seal (154-6)	2	
	751 819	E,G	* FELT - Grease seal (154-14)	2	
-10	756 008	F	* RING - Snap (155-2)	2	
	752 830	E,G	* RING - Snap (3023)	2	
-11	751 384	D	* BOLT - Wheel (AN4-36A)	3	
	751 405	E	* BOLT - Wheel (AN5-35A)	3	
	758 456	G	* BOLT - Wheel (AN5-34A)	3	
	400 015	F	* BOLT - Wheel (AN4-22A)	3	
-12	407 565	D,F	* WASHER - Wheel bolt (AN960-416)	6	
	407 566	E,G	* WASHER - Wheel bolt (AN960-516)	6	
-13	404 888	D,F	* NUT - Wheel bolt (AN365-428)	3	
	404 889	E,G	* NUT - Wheel bolt (AN365-524)	3	
-14	756 007	F	* RING - Grease seal (153-8)	4	
	755 964	E,G	* RING - Grease seal (153-9)	4	

When ordering, always specify Part Number, Description, and Serial Number of Aircraft

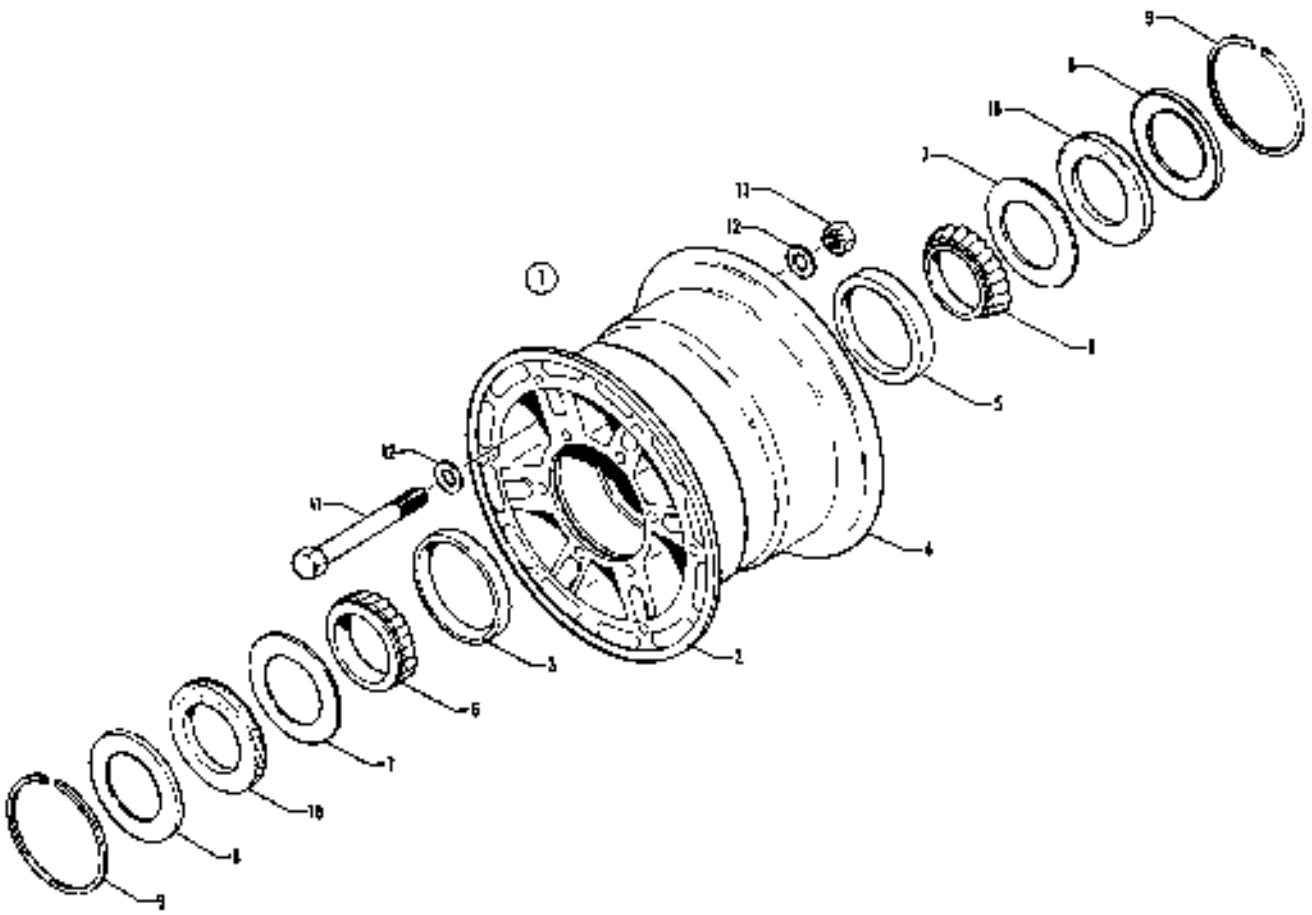

Figure 52A. Nose Wheel Assembly (McCauley)

CODE EXPLANATIONS FOR FIGURE 52A

A - Used on PA-32-260 with serial numbers 32-1 to 32-7800006 incl., and PA-32-300 with serial numbers 32-40000 to 32-7840101 incl.
B - Used on PA-32-260 with serial numbers 32-7800007 and up, and PA-32-300 with serial numbers 32-7840102 and up.
C - Used on model D-30625 Wheel Assembly only.
D - Used on Model D-30665 Wheel Assembly only.
E - Reference latest revision to Piper Service Bulletin 428, applicable to PA-32-260 with serial numbers 32-7400001 to 32-7400050 inclusive and PA-32-300 with serial numbers 32-7440001 to 32-7440086 and 32-7440088 to 32-7440160.
Installation of Kit 760-885 will provide more positive steering capabilities and reduce maintenance costs.

PIPER PARTS CATALOG

Figure and Index Number	Part Number	Code	NOMENCLATURE	No. Req.	SERIAL NUMBERS AFFECTED
52A-1	551 773	A,E	WHEEL ASSEMBLY - Nose (D-30625)	1	
	551 779	B	WHEEL ASSEMBLY - Nose (D-30665)	1	
-2	756 688	C	* WHEEL - Half, inner (C-30608)	1	
	763 712	D	* WHEEL - Half, inner (D-30667)	1	
-3	763 216		* * CUP - BEARING (A-30079-1)	1	
-4	756 687	C	* WHEEL - Half, outer (C-30605)	1	
	763 713	D	* WHEEL - Half, outer (D-30657)	1	
-5	763 216		* * CUP - Bearing (A-30079-1)	1	
-6	758 392		* BEARING - Cone (A-30079-2)	2	
-7	762 559		* RETAINER - (A-30015)	2	
-8	762 558		* RETAINER - (A-30014)	2	
-9	762 562		* RING - Retaining (A-1636-24)	2	
-10	754 855		* FELT - Retainer (A-30010)	2	
-11	758 394		* BOLT - (A-2513-88)	3	
-12	756 685		* WASHER - (A-1638-1)	6	
-13	752 571		* NUT - (A-1639-1)	3	

When ordering, always specify Part Number, Description, and Serial Number of Aircraft

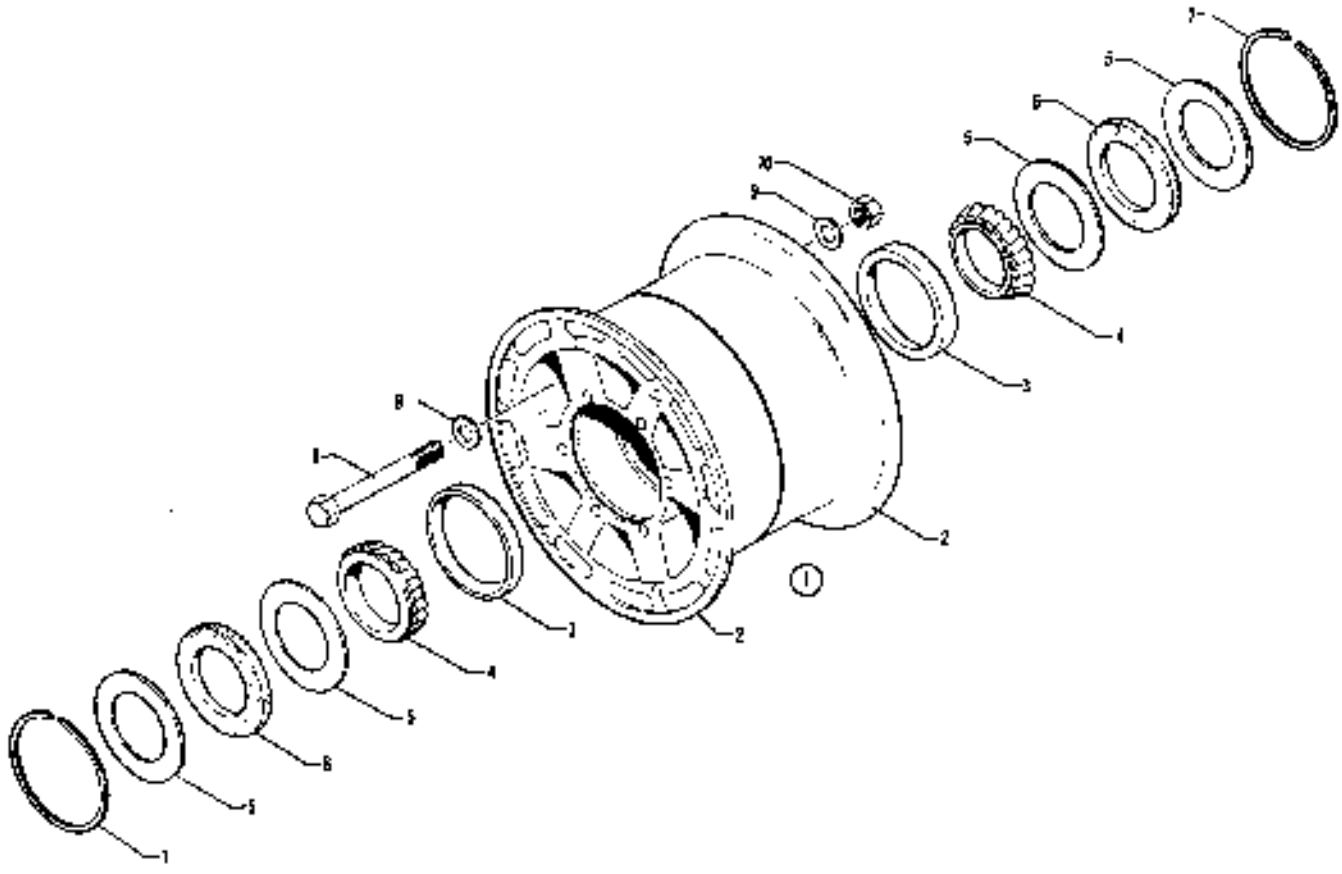

Figure 52B. Nose Wheel Assembly (McCauley)

CODE EXPLANATIONS FOR FIGURE 528

PIPER PARTS CATALOG

Figure and Index Number	Part Number	Code	NOMENCLATURE	No. Req.	SERIAL NUMBERS AFFECTED
52B-1	551 772		WHEEL ASSEMBLY - Nose (D-30500)	1	
-2	756 696		WHEEL - Half (C-30648)	2	
-3	763 215		CUP - Bearing (A-30078-1)	1	
-4	758 391		BEARING - Cone (A-30078-2)	2	
-5	762 580		RETAINER - (A-30048)	4	
-6	754 856		FELT - (A-30047)	2	
-7	762 561		RING - Retaining (A-1636-23)	2	
-8	758 393		BOLT - (A-2513-73)	3	
-9	756 685		WASHER - (A-1636-1)	6	
-10	762 571		NUT - (A-1639-1)	3	

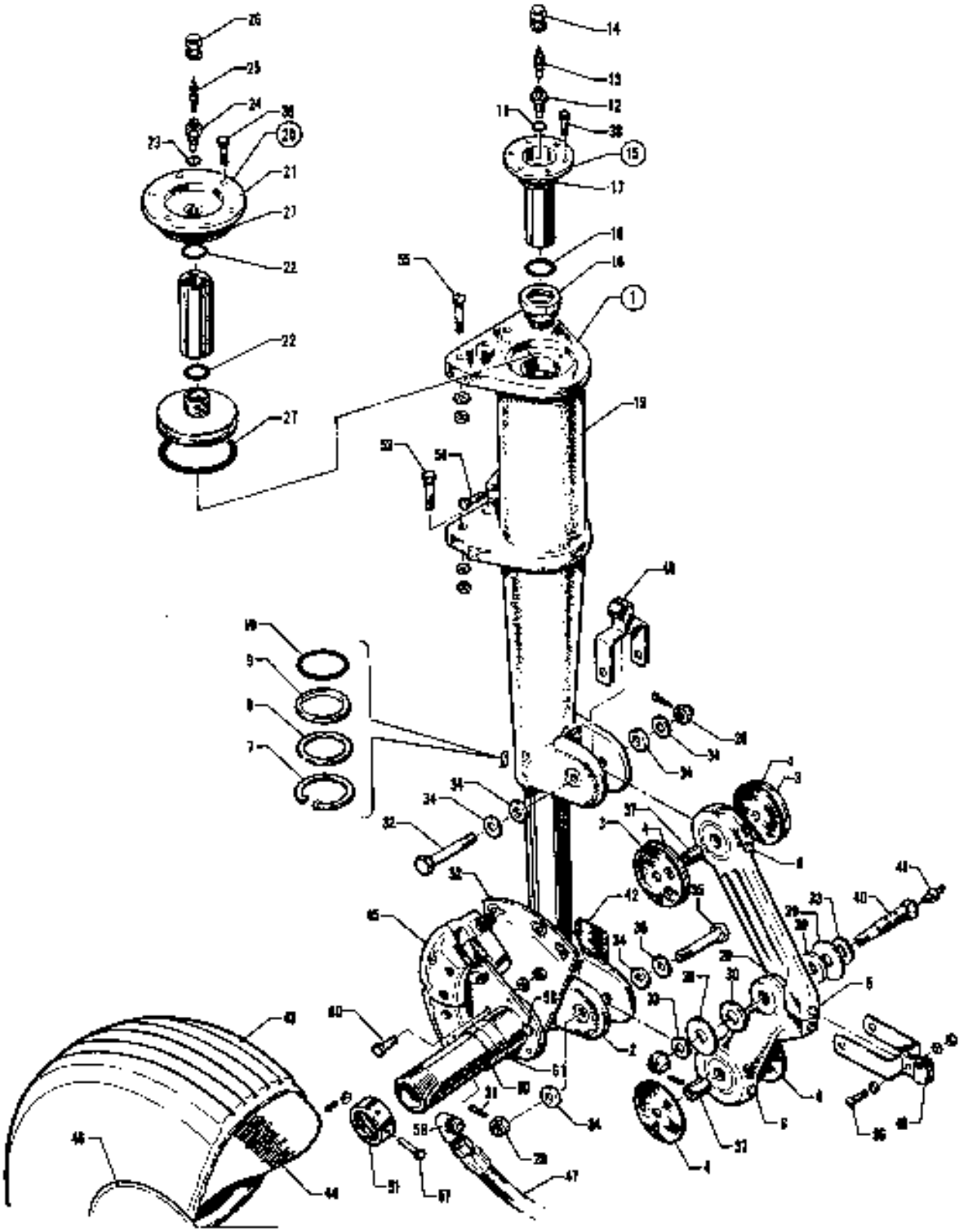

Figure 53 Main Gear Installation

CODE EXPLANATIONS FOR FIGURE 53

A - Used on PA-32-260 only.
B - Used when gear cylinder is stamped with Piper Part no. 65319.
C - Used when gear cylinder forging is stamped with Piper Part No. 65441-00 or 65441-02.
D - When ordering for PA-32-260 with serial numbers 32-1 to 32-7200038 inclusive, and PA-32-300 with serial numbers 32-40000 to 32-7420119 inclusive, ascertain if existing links are marked with forging number 78031-0. If number 78031-0 does not appear on link forging, links must be ordered in pairs along with two 63312-02 washers.
E - See Figure 56 for component parts.
F - See Figure 61 for component parts.
G - Used on PA-32-260 with serial numbers 32-662 and up, and PA-32-300 with serial numbers 32-40000 and up.
H - Used on PA-32-260 with serial numbers 32-1 to 32-7700023 inclusive, and PA-32-300 with serial numbers 32-40000 to 32-7840043 inclusive.
J - Used on PA-32-260 with serial numbers 32-1 to 32-7700023 inclusive, and PA-32-300 with serial numbers 32-40000 to 32-7840043 inclusive. Order Greaser Bolt Replacement Kit 760 910 if shoulder bolt is installed. Reference latest revision to Piper Service Letter 842.
K - Used on PA-32-260 with serial numbers 32-7800001 and up, and PA-32-300 with serial numbers 32-7840044 and up.
L - Used on PA-32-260 with serial numbers 32-1 to 32-7700023 inclusive, and PA-32-300 with serial numbers 32-40000 to 32-7740113 inclusive.
M - Used on PA-32-260 with serial numbers 32-7800001 and up, and PA-32-300 with serial numbers 32-7840001 and up.
N - Reference latest revision to Piper Service Bulletin 1131, applicable to PA-32-260 with serial numbers 32-1 to 32-7800008. If required, (2) each complete main gear cylinder assembly Piper Part No. 65489-02.

PIPER PARTS CATALOG

Figure and Index Number	Part Number	Code	NOMENCLATURE	No. Req.	SERIAL NUMBERS AFFECTED
53-	68103		DRAWING - Main Gear Installation		
-1	65493-10		GEAR ASSEMBLY - Main left		
			(less tire, tube, wheel and brake assembly)	1	
	65493-11		GEAR ASSEMBLY - Main right		
			(less tire, tube, wheel and brake assembly)	1	
-2	78738-04		* STUB AXLE AND OLEO PISTON ASSEMBLY, Left	1	
	78738-05		* STUB AXLE AND OLEO PISTON ASSEMBLY, Right	1	
-3	63311-03		* WASHER - (.005 thick)	AR	
-4	63311-00		* WASHER - Bearing (.063 thick)	4	
-5	78033-00	D	* LINK ASSEMBLY - Torque	2	
-6	460 691		* * FITTING - Lubricator (AN944-101)	2	
-7	63314-00	N	* RETAINER RING - Piston	1	
-8	63307-00	N	* RING - Piston spacer	1	
-9	486 188	N	* RING - Scraper (AN6231-18)	1	
-10	484 769	N	* QUAD RING - (4326)	1	
-11	462 024	A,B	* GASKET - Air valve (AN901-5A)	1	
-12	453 124	A,B	* VALVE - Air (AN812-1)	1	
-13	455 124	A,B	* CORE - Air valve (AN809-1)	1	
-14	454 053	A,B	* CAP - Air valve - (AN813-1B)	1	
-15	65005-00	A,B	* TUBE ASSEMBLY - Metering (with cylinder head)	1	
-16	65006-00	A,B	* ORIFICE ASSEMBLY	1	
-17	484 711	A,B	* “O” RING - (AN6277-23)	1	
-18	484 746	A,B	* “O” RING - (AN6227-19)	1	
-19	65319-04	A,B	* CYLINDER - Main gear	1	
	65490-00	C,N	* CYLINDER - Main gear	1	
-20	65488-00	C,N	* HEAD ASSEMBLY - Main gear cylinder	1	
-21	65485-00	C	* * HEAD - Main gear cylinder	1	
-22	484 789	C	* * “O” RING - (MS28775-116)	2	
-23	462 024	C	* * GASKET - Air valve (AN901-5A)	1	
-24	453 124	C	* * VALVE - Air (AN812-1)	1	
-25	455 124	C	* * CORE - Air valve (AN809-1)	1	
-26	454 053	C	* * CAP - Air valve (AN813-1B)	1	
-27	462 036	C,G,N	* “O” RING - (AN6230-9)	2	
-28	404 122		* NUT - (AN310-C5)	2	
-29	63312-00		* WASHER - Torque link spacer	1	
-30	63312-02		* WASHER - Torque link spacer	2	
-31	424 095		* COTTER PIN - (MS24665-151)	2	
-32	400 166		* BOLT - (AN5-23)	1	
-33	407 589		* WASHER - (AN960-816L)	2	
-34	407 566		* WASHER - (AN960-516)	6	
-35	400 165		* BOLT - (AN5-22)	1	
-36	407 586		* WASHER - (AN960-516L)	1	
-37	63310-00		* SPACER - Torque link	2	
-38	401 918	N	* BOLT - (MS20074-04-03 / AN74A-3)	6	
-39	62833-27		* WASHER - Torque link bolt	2	
-40	79543-02	J	* BOLT - Main gear torque link	1	
	400 302	K	* BOLT - Main gear torque link (AN8-21)	1	
	404 105		* NUT - (AN310-8)	1	
	424 059		* COTTER PIN - (MS24665-283)	1	
-41	460 691	H	* FITTING - Lubricator (AN944-101)	1	

PIPER PARTS CATALOG

Figure and Index Number	Part Number	Code	NOMENCLATURE	No. Req.	SERIAL NUMBERS AFFECTED
53-42	65369-00		PLACARD - Oleo service instruction (decal)	2	
-43	451 724		TIRE - (6.00 x 6,6 ply) McCreary	2	
	761 972		TIRE - (6.00 x 6,6 ply) B.F. Goodrich	2	
	761 995		TIRE - (6.00 x 6,6 ply) McCreary Airhawk	2	
-44	451 735		TUBE - (6.00 x 6)	2	
-45	551 706	F	BRAKE ASSEMBLY - (30-65)	2	
-46	551 765	E	WHEEL ASSEMBLY - Main (Cleveland 40-90A)	2	
-47	63901-17		HOSE - Brake line	2	
-48	63332-03		CLIP - Hose, top and bottom	4	
-49	63332-05		CLIP - Hose, center	2	
-50	63484-00		SPACER - Main gear axle (.153 wide)	2	
-51	66820-00		NUT - Axle (1 09 long)	2	32-1 thru 32-7940290
-52	63370-05	L	BRACKET ASSEMBLY - Wheel fairing, left	1	
	63370-04	L	BRACKET ASSEMBLY - Wheel fairing, right	1	
	37880-02	M	BRACKET ASSEMBLY - Wheel fairing, left	1	
	37880-03	M	BRACKET ASSEMBLY - Wheel fairing, right	1	
-53	401 311		BOLT - (AN4-11A)	8	
	407 565		WASHER - (AN960-416)	4	
	407 585		WASHER - (AN960-416L)	4	
	404 888		NUT - (MS20365-428C)	8	
-54	400 003		BOLT - (AN4-6A)	4	
	407 565		WASHER - (AN960-416)	4	
	404 888		NUT - (MS20365-428C)	4	
-55	416 346	A	SCREW - (AN525-416-20)	8	32-1 to 32-661 inclusive.
	416 347	G	SCREW - (AN525-416-22)	8	
	407 585		WASHER - (AN960-416L)	8	
	404 530		NUT - (MS21042-4))	8	
-56	415 737		SCREW - (AN515-6R6)	6	
	407 562		WASHER - (AN960-6)	12	
	404 909		NUT - (MS20365-632C)	6	
-57	424 163		PIN - Clevis (AN392-53)	2	
	407 561		WASHER - (AN960-4)	2	
	424 050		COTTER PIN - (AN380-1)	2	
-58	400 003		BOLT - (AN4-6A)	6	
	407 565		WASHER - (AN960-416)	9	
	406 637		NUT - (H10-4)	6	
-59	458 894		ELBOW - (AN822-4D)	2	
-60	400 003		BOLT - (AN4-6A)	6	
	407 565		WASHER - (AN960-416)	9	
	404 530		NUT - (MS21042-4)	6	
-61	63308-00		SPACER - Wheel (.50 wide)	2	

When ordering, always specify Part Number, Description, and Serial Number of Aircraft

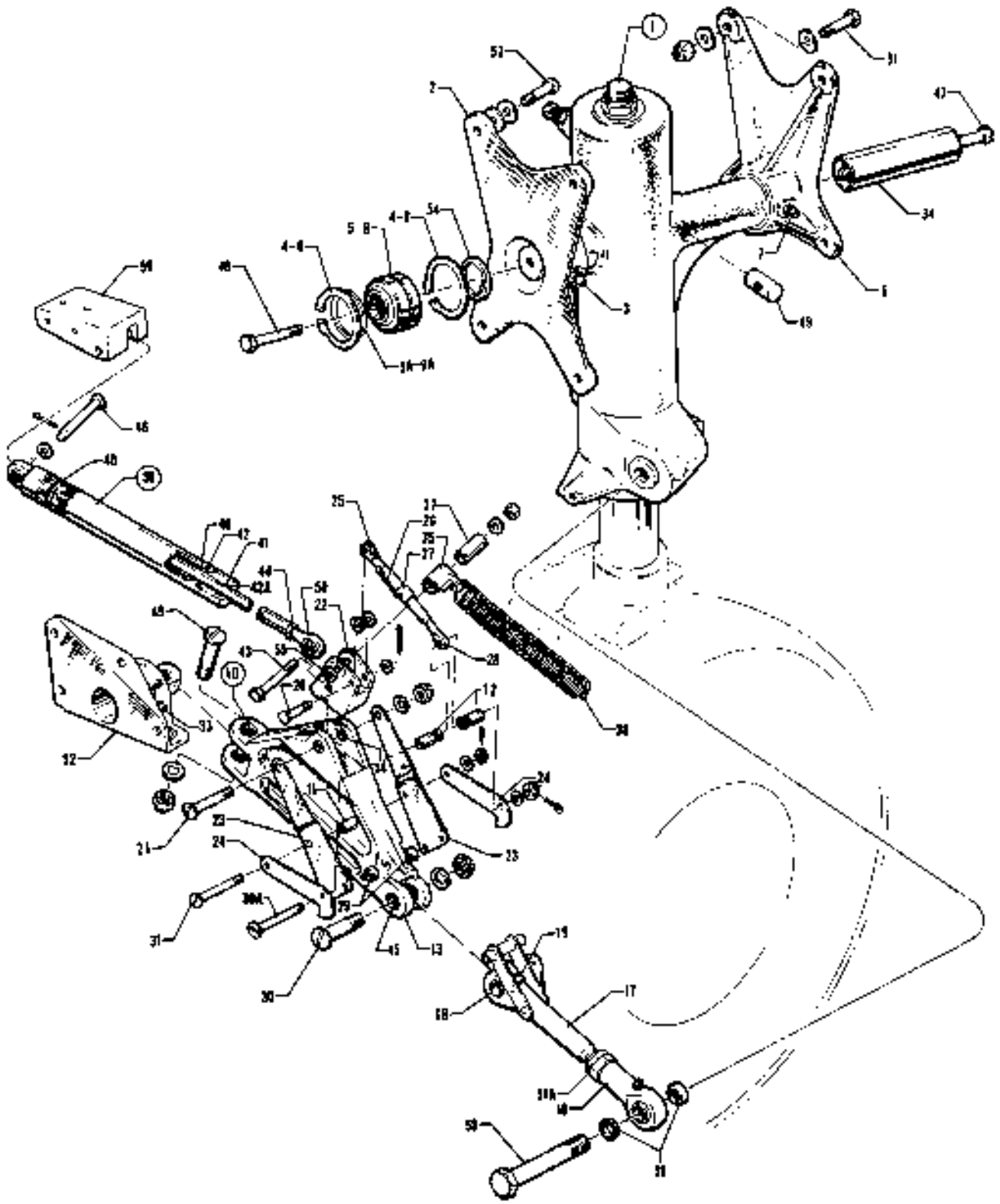

Figure 64 Main Gear Installation

CODE EXPLANATIONS FOR FIGURE 54

A - See Figure 55 for component parts.
B - Reference Piper Service Bulletin #1023 - Latest Revision. A new and improved cylinder (P/N 96860-03) has replaced p/n 96860-002. Also reference Vendor Service Publication - (VSP-155) Cleveland Wheels & Brakes (Parker Hannifin) SB 7076 for improved landing gear retreat actuator P/N 96860-03. Service Bulletin Upgrade Kit Piper P/N 767-370 (Parker Hannifin SB7076-1) has been created to upgrade affected actuators to the P/N SFA232-5 Rev B or later revision improved version.

PIPER PARTS CATALOG

Figure and Index Number	Part Number	Code	NOMENCLATURE	No. Req.	SERIAL NUMBERS AFFECTED
54-	95912		DRAWING - Main Landing Gear Installation		
-1	96766-16	A	GEAR ASSEMBLY - Main, left		
			(less tire, tube, wheel and brake assembly)	1	
	96766-17	A	GEAR ASSEMBLY - Main, right		
			(less tire, tube, wheel and brake assembly)	1	
-2	67040-14		FITTING ASSEMBLY - Forward trunnion, left	1	
	67040-15		FITTING ASSEMBLY - Forward trunnion, right	1	
-3	460 691		* FITTING - Lubricator (AN944-101)	1	
-4	484 719		* RING - Retainer (5008-175)	2	
-5	452 575		* BEARING - Spherical (PS10020-10-2)	1	
-5a	62833-44		* SPACER	AR	
-6	67042-13		FITTING ASSEMBLY - Aft trunnion	2	
-7	460 691		* FITTING - Lubricator (AN944-101) Straight	1	
-8	484 719		* RING - Retainer (5008-175)	2	
-9	452 575		* BEARING - Spherical (PS10020-10-2)	1	
-9a	62833-44		* SPACER	AR	
-10	67025-09		TRUSS ASSEMBLY - Main gear, left	1	
	67025-10		TRUSS ASSEMBLY - Main gear, right	1	
-11	63900-88		* BUSHING - Main gear truss assembly	1	
-12	63900-130		* BUSHING - Main gear truss assembly	2	
-13	67025-02		* LINK ASSEMBLY - Main gear truss assembly	1	
-14	63900-89		* * BUSHING - Main gear truss assembly	2	
-15	14843-16		* * BUSHING - Main gear truss assembly	4	
-16	452 368		* BEARING - Main gear truss assembly (PS10020-2-2RG)	1	
-17	67797-04		* LINK ASSEMBLY - Main gear truss assembly, left)	1	
	67797-05		* LINK ASSEMBLY - Main gear truss assembly, right	1	
-18	65003-44		* * BUSHING - Main gear truss assembly	2	
-19	460 860		* * FITTING - Lubricator (MS15001-2)	1	
-20	424 181		* PIN - Flat head (AN393-25)	1	
	407 584		* WASHER - (AN960-10L)	3	
	424 051		* COTTER PIN - (AN380-2-2)	1	
-21	400 711		* BOLT - (AN24-26)	1	
	407 565		* WASHER - (AN960-416)	1	
	404 393		* NUT - (AN320-4)	1	
	424 051		* COTTER PIN - (AN380-2-2)	1	
-22	67031-02		* FITTING - Gear retraction, left	1	
	67031-03		* FITTING - Gear retraction, right	1	
-23	67024-00		* PLATE - Left gear, front and right gear, rear	1	
	67024-01		* PLATE - Left gear, rear and right gear, front	1	
-24	67028-00		* HOOK - Main gear truss assembly	2	
-25	461 131		* FORK - (NAS645-16RS)	1	
-26	554 979		* CLIP - Turnbuckle (MS21256-1)	1	
-27	452 009		* BARREL - Turnbuckle (NAS649B-16S)	1	
-28	459 957		* EYE - Turnbuckle (NAS648-16LS)	1	
-29	14175-103		* BUSHING -Main gear truss assembly	2	
-30	402 927		* BOLT - (NAS464-6-16)	1	
	407 587		* WASHER - (AN960-616L)	1	
	404 395		* NUT - (AN320-6)	1	
	424 059		* COTTER PIN - (AN380-3-3)	1	
-30a	400 880		* BOLT - (AN23-28)	1	
	407 564		* WASHER - (AN960-10)	2	
	407 584		* WASHER - (AN960-10L)	1	
	404 100		* NUT - (AN310-3)	1	
	424 051		* COTTER PIN - (MS24665-132)	1	

When ordering, always specify Part Number, Description, and Serial Number of Aircraft

PIPER PARTS CATALOG

Figure and Index Number	Part Number	Code	NOMENCLATURE	No. Req.	SERIAL NUMBERS AFFECTED
54-31	400 880		* BOLT - (AN23-28)	1	
	407 584		* WASHER - (AN960-10L)	1	
	404 100		* NUT - (AN310-3)	1	
	424 051		* COTTER PIN (AN380-2-2)	1	
-31a	404 326		* NUT - Check (AN316-8R)	1	
-32	95643-06		BRACKET ASSEMBLY - Main gear truss left	1	
	95643-07		BRACKET ASSEMBLY - Main gear truss right	1	
-33	460 691		* FITTING - Lubricator straight (AN944-101)	1	
	460 801		* FITTING - Lubricator 90 degrees (MS15001-4)	1	
-34	67502-00		RETAINER ASSEMBLY - Main gear	2	
-35	67202-00		SWIVEL ASSEMBLY - Side brace spring attachment	2	
-36	21822-00		BUSHING - Tapered truss assembly	4	
-37	63900-85		BUSHING - Spring attachment	2	
-38	67203-00		SPRING - Main gear downlock	2	
-39	455 994	B	CYLINDER ASSEMBLY - Hydraulic (96860-02)	2	32R-7680001 thru 32R7680525
	558 010	B	CYLINDER ASSEMBLY - Hydraulic (96860-03)	2	32R-7780001 and up
-40	484 706		* “O” RING - (AN6227-11)	2	
-41	484 748		* “O” RING - (AN6227-8)	1	
-42	755 997		RETAINER - Main gear cylinder (SFD1400-1)	1	
-42a	756 053		RING - Back up (MS28782-8)	1	
-43	400 451		BOLT - (AN3-20A)	2	
	407 564		WASHER - (AN960-10)	2	
	404 887		NUT - (MS20365-1032C)	2	
-44	404 225		NUT - (AN315-4R)	2	
-45	400 761		BOLT - (AN26-25)	2	
	402 901		BOLT - (NAS464P6-20)	2	32R-7780001 and up
	407 567		WASHER - (AN960-616)	2	
	404 395		NUT - (AN320-6)	2	
	424 059		COTTER PIN - (MS24665-283)	2	
-46	424 187		PIN - (MS20392-2C37)	2	
	407 564		WASHER - (AN960-10)	2	
	424 052		COTTER PIN - (MS24665-134)	2	
-47	401 335		BOLT - (AN4-40A)	2	
-48	400 012		BOLT - (AN4-17A)	2	
	62833-124		WASHER	2	
-49	406 660		NUT - Barrel (1452-048)	4	
-50	452 334		BEARING - (PS10020-1-6RX)	2	
-51	401-188		BOLT - (AN5-10A)	8	
	407 566		WASHER - (AN960-516)	16	
	404 889		NUT - (MS20365-524C)	8	
-52	401 189		BOLT - (AN5-11A)	8	
	407 566		WASHER - (AN960-516)	16	
-53	402 960		BOLT - (NAS464P8A-44)	2	
	407 569		WASHER - (AN960-816)	2	
	404 832		NUT - (MS20364-820C)	2	
-54	67198-00		WASHER - Main gear	2	
-55	95061-64		BUSHING	2	
-56	67071-00		BRACKET - Main gear cylinder left	1	
	67071-01		BRACKET - Main gear cylinder right	1	

When ordering, always specify Part Number, Description, and Serial Number of Aircraft

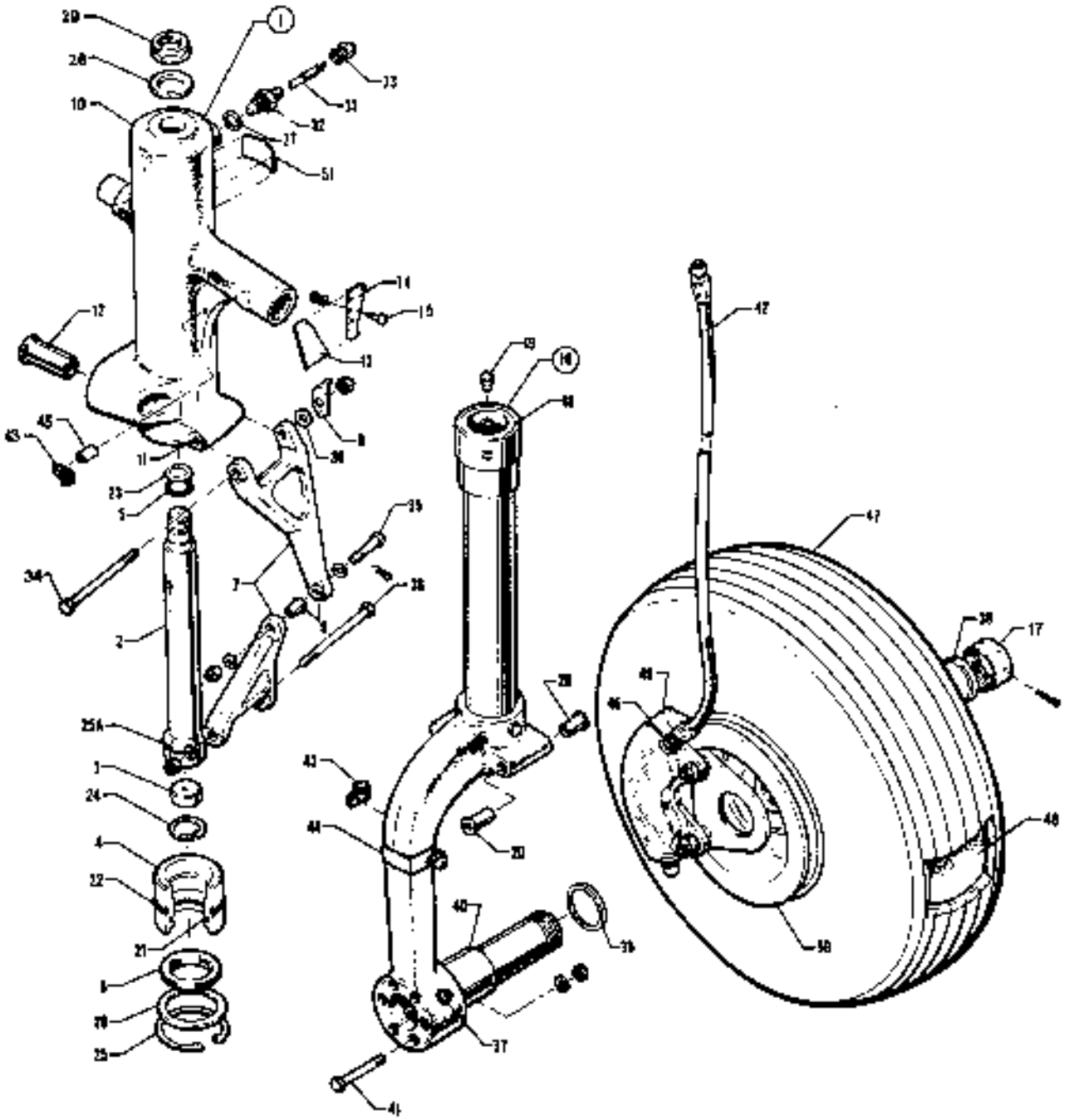

Figure 55 Main Gear Assembly

CODE EXPLANATIONS FOR FIGURE 55

A - See Figure 51 for component parts.
B - See Figure 56 for component parts.
C - Used if heavy duty wheels, brakes and tires are installed.
D - Used if heavy duty wheels, brakes and tires are not installed.
W - These parts must be ordered from Service Spares Department, Piper Aircraft, Lock Haven, Penna.

PIPER PARTS CATALOG

Figure and Index Number	Part Number	Code	NOMENCLATURE	No. Req.	SERIAL NUMBERS AFFECTED
55-	95912		DRAWING - Main Landing Gear Installation		
-1	96766-16		GEAR ASSEMBLY - Main, left (less tire, tube, wheel and brake assembly)	1	
	96766-17		GEAR ASSEMBLY - Main, right (less tire, tube, wheel and brake assembly)	1	
-2	20754-02		* ORIFICE - Main landing gear	1	
-3	79800-02		* PLATE - Orifice	1	
-4	67755-00		* BEARING - Landing gear	1	
-5	484 790		* “O” RING - (MS28775-210)	1	
-6	187 627		* STRIP - Wiper (S-35-29, Code 10V90-117)	1	
-7	105041-02		* LINK ASSEMBLY - Landing gear torque	2	
-8	751 369		* * BUSHING - Landing gear strut	1	
-9	67023-00		* BRACKET - Squat switch actuator, left	1	
-10	67926-40		* TRUNNION ASSEMBLY - Main gear, left	1	
	67926-41		* TRUNNION ASSEMBLY - Main gear, right	1	
-11	67026-07		* * BEARING - Main gear trunnion	2	
-12	67026-17		* * BUSHING - Main gear trunnion	2	
-13	37732-00		* * BRACKET - Gear switch, left	1	
-14	67753-00		* * PLATE - Spring attachment	1	
-15	401 266		* * BOLT - (AN3-5A)	2	
	407 584		* * WASHER - (AN960-10L)	2	
	404 887		* * NUT - (MS20365-1032C)	2	
-16	67037-06		* STRUT ASSEMBLY - Main gear	1	
-17	66820-00		* * NUT - Main gear axle assembly	1	
-18	67036-00		* * BEARING - Main strut, upper	1	
-19	20784-00		* * PIN - Main strut	2	
-20	67026-07		* * BEARING - Main strut	2	
-21	484 799		* “O” RING - (MS28775-327)	1	
-22	462 034		* “O” RING - (AN6230-5)	1	
-23	484 714		* RING - Retainer - (MS28782-15)	1	
-24	484 684		* RING - Snap (N5000-118MD)	1	
-25	484 685		* RING - Snap (N5000-250MD)	1	
-25a	484 828		* RING - Compression (R19047)	1	
-26	80122-89		* WASHER - Main gear	1	
-27	462 024		* GASKET - Air valve (AN901-5A)	1	
-28	80122-88		* WASHER - Main gear	1	
-29	404 843		* NUT - (MS20364-1216C)	1	
-30	494 114		* WASHER - (96312) Left	1	
-31	455 124		* Core - Air valve (AN809-1)	1	
-32	453 124		* BODY - Air valve (AN812-1)	1	
-33	454 053		* CAP - Air valve (AN813-1B)	1	
-34	402 345		* BOLT - (AN175-33) Left	1	
	402 344		* BOLT - (AN175-32) Right	1	
	407 566		* WASHER - (AN960-416) Right	1	
	404 102		* NUT - (AN310-5)	1	
	424 051		* COTTER PIN - (MS24665-132)	1	
-35	402 312		* BOLT - (AN174-14)	1	
	407 565		* WASHER - (AN960-416)	2	
	404 101		* NUT - (AN310-4)	1	
	424 050		* COTTER PIN - (AN380-2-1)	1	
-36	402 344		* BOLT - (AN175-32)	1	
	407 586		* WASHER - (AN960-516L)	1	
	404 102		* NUT - (AN310-5)	1	
	424 052		* COTTER PIN - (MS24665-134)	1	

When ordering, always specify Part Number, Description, and Serial Number of Aircraft

PIPER PARTS CATALOG

Figure and Index Number	Part Number	Code	NOMENCLATURE	No. Req.	SERIAL NUMBERS AFFECTED
55-37	401 329	W	* BOLT - (AN4-31A)	1	
	407 686	W	* WASHER - (AN960-416L)	1	
	404 836	W	* NUT - (MS20364-428C)	1	
-38	63900-116		BUSHING - Main gear axle	2	
-39	63484-00		BUSHING - Main gear	2	
-40	63900-103		BUSHING - Main gear	2	
-41	401 320		BOLT - (AN4-C20A)	12	
	407 675	W	WASHER - (AN960-C416)	12	
	404 868	W	NUT - (MS20365-428C)	12	
-42	63801-17		HOSE ASSEMBLY - Brake line	2	
-43	564 734		CLAMP - (PS10017-14-S)	4	
-44	67277-00	W	CLAMP	2	
-45	63900-11		BUSHING - Main gear	2	
-46	478 848	W	NIPPLE - (AN816-4D)	2	
-47	451 731		TIRE - (6.00 x 6, 8 ply) McCreary	2	
	751 996		TIRE - (6.00 x 6, 8 ply) McCreary Airhawk (heavy duty)	2	
	761 976		TIRE - (6.00 x 6, 8 ply) B.F. Goodrich (heavy duty)	2	
-48	451 735	W	TUBE - (6.00 x 6)	2	
-49	551 706	A	BRAKE ASSEMBLY - (30-65)	2	
	651 726	A	BRAKE ASSEMBLY - (30-83A) (heavy duty)	2	
-50	551 786	B	WHEEL ASSEMBLY - Main (40-90A)	2	
	561 770	B	WHEEL ASSEMBLY - Main (40-120C) (heavy duty)	2	
51	69669-68	D	PLACARD - Oleo service instructions	2	
	69669-36	C	PLACARD - Oleo service instructions	2	

When ordering, always specify Part Number, Description and Serial Number of Aircraft

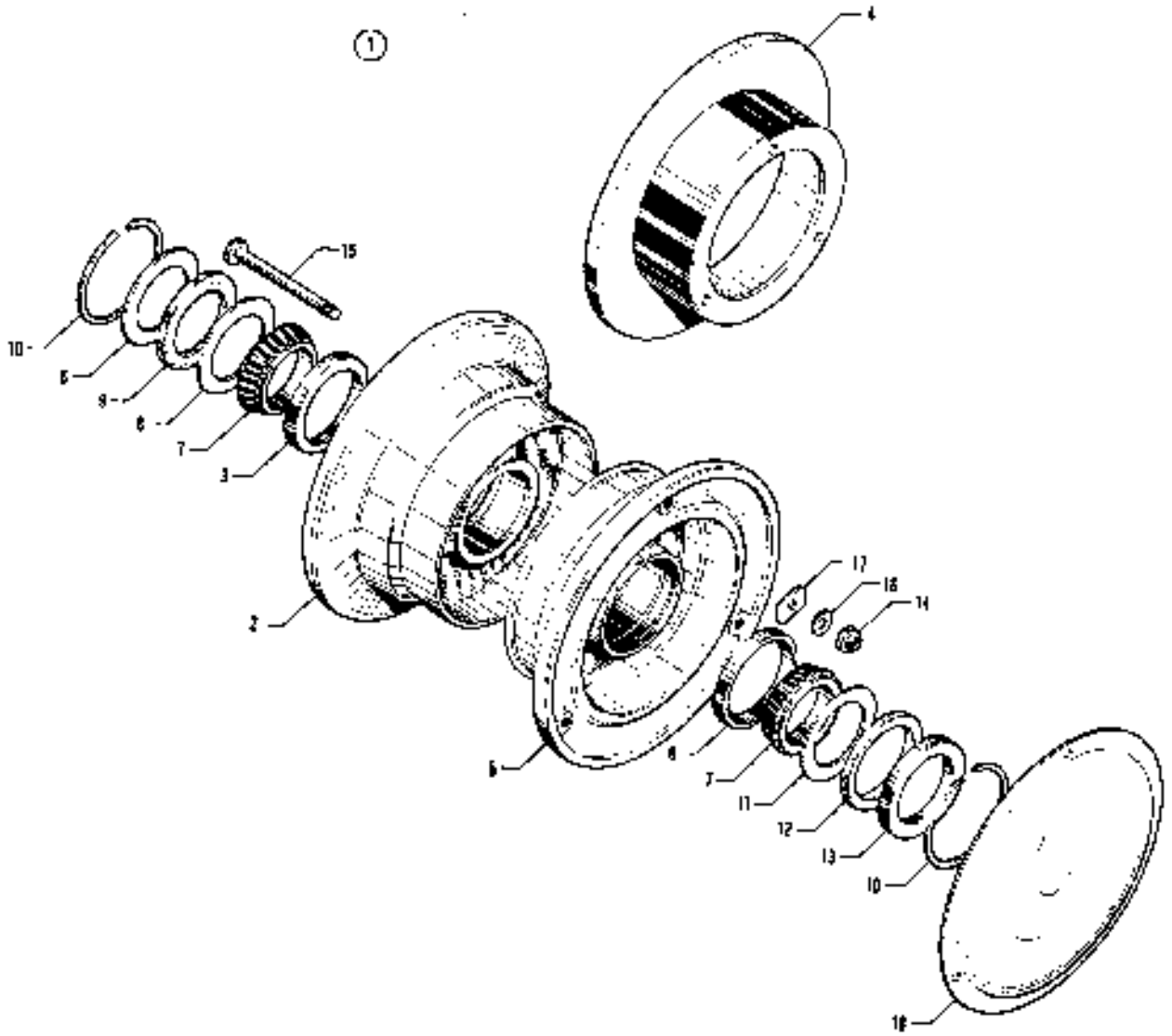

Figure 68. Main Wheel Assembly

CODE EXPLANATIONS FOR FIGURE 66

A - If brake disc is stamped with Cleveland No. 164-22A or if bolt hole is spot faced, (2) washers part no. 407 566 must be installed under each bolt head and (1) washer part no. 407 566 must be installed under each nut. If brake disc is not stamped with Cleveland No. 164-22A and bolt hole is not spot faced, (1) washer part no. 758 609 must be installed under each bolt head and (1) washer part no. 407 566 must be installed under each nut.

B - One (1) washer used under each bolt head if brake disc is not stamped with Cleveland No. 164-22A and bolt hole is not spot faced.

C - Used on wheel assembly 40-90A only.

D - Used on wheel assembly 40-120C only.

W - These parts must be ordered from Service Spares Department, Piper Aircraft, Lock Haven, Penna.

PIPER PARTS CATALOG

Figure and Index Number	Part Number	Code	NOMENCLATURE	No. Req.	SERIAL NUMBERS AFFECTED
58-1	551 765		WHEEL ASSEMBLY - Main (Cleveland 40-90A)	1	
	551 770		WHEEL ASSEMBLY - Main (Cleveland 40-120C) (heavy duty)	1	
-2	756 656	C	* WHEEL - Half, inner (161-47)	1	
	756 879	D	* WHEEL - Half, inner (161-61)	1	
-3	751 494	W	* * CUP - Bearing (13836)	1	
-4	754 843	C	* DISC ASSEMBLY - Brake (164-23)	1	
	754 614	D	* DISC ASSEMBLY - Brake (164-46)	1	
-5	756 665	C	* WHEEL - Half, outer (162-45)	1	
	756 680	D	* WHEEL - Half, outer (162-57)	1	
-6	751 494	W	* * CUP - Bearing (13836)	1	
-7	751 489	W	* BEARING - Cone, Timken (13889)	2	
-8	755 989	W	* RING - Grease seal (153-4)	2	
9	751 772	W	* FELT - Grease seal (164-3)	1	
-10	752 830	W	* RING - Snap (155-1)	2	
-11	755 929	W	* RING - Grease seal (153-3)	1	
-12	751 810	W	* FELT - Grease seal (164-13)	1	
-13	756 930	W	* RING - Grease seal (153-16)	1	
-14	404 889	C,W	* NUT - Wheel bolt (AN365-624)	3	
	404 889	D,W	* NUT - Wheel bolt (AN365-624)	6	
-15	753 473	A,C,W	* BOLT - Wheel (AN6-36A)	3	
	401 375	D	* BOLT - Wheel (AN6-36A)	6	
-16	407 566	A,C,W	* WASHER - Wheel bolt (AN960-516)	AR	
	407 566	D,W	* WASHER - Wheel bolt (AN960-516)	6	
-17	756 609	B,C,W	* WASHER - Wheel bolt (96-8)	3	
-18	753 923		CAP - Hub (167-9) (451 783)	2	

When ordering, always specify Part Number, Description and Serial Number of Aircraft

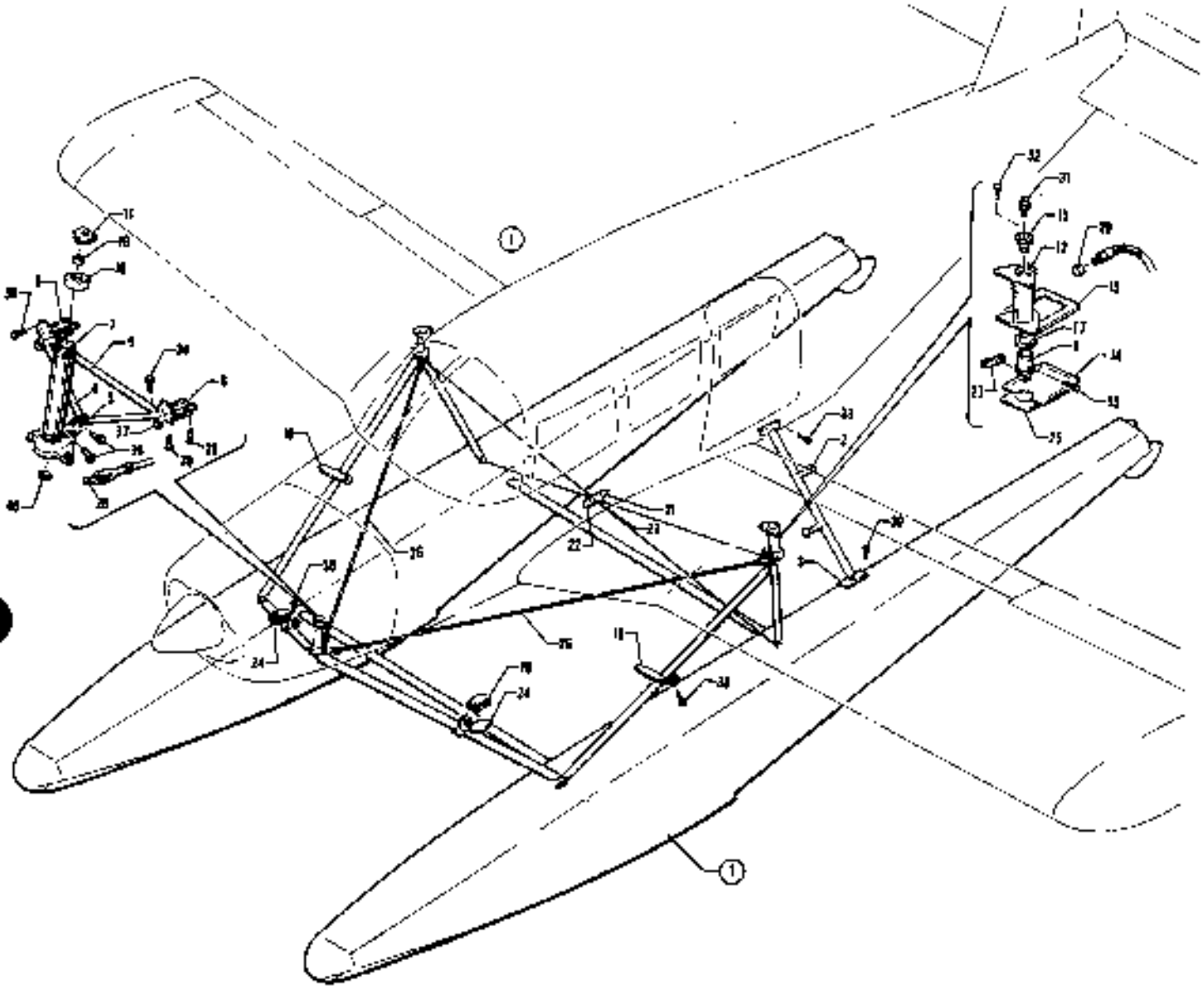

Figure 67. EDO Float Installation

CODE EXPLANATIONS FOR FIGURE 57

A - Secure from EDO Commercial Corporation, Westchester County Airport, White Plains, N.Y.
W - These parts must be ordered from Service Spares Department, Piper Aircraft, Lock Haven, Penna.

PIPER PARTS CATALOG

Figure and Index Number	Part Number	Code	NOMENCLATURE	No. Req.	SERIAL NUMBERS AFFECTED
57-	68651		DRAWING - Float installation		
-1		A	FLOAT INSTALLATION - EDO drawing (53520)		
-2	68134-00		LADDER ASSEMBLY	1	
-3	68143-00		MOUNT ASSEMBLY - Ladder	1	
-4	68126-00		BRACKET ASSEMBLY - Forward float support	1	
-5	68117-00		COUPLING - Forward float support	1	
-6	68116-00		BRACKET ASSEMBLY - Float support	2	
-7	68128-00		ATTACHMENT ASSEMBLY - Forward float (2 1/8" diameter tube)	1	
	68128-02		ATTACHMENT ASSEMBLY - Forward float (2" diameter tube)	1	
-8	68126-00		FITTING - Wing float attachment	2	
-9	68150-00		TUBE - Forward float support	1	
-10	63385-00		CAP - Bearing (used with 2 1/8" diameter tube)	1	
	63385-02		CAP - Bearing (used with 2" diameter tube)	1	
-11	63387-00		BLOCK - Strut adapter	1	
-12	62017-07		HOUSING - Float attachment, wing	2	
-13	65726-04		SEAL - Float attachment	2	
-14	65726-02		PLATE - Float attachment, wing, left	1	
	65726-03		PLATE - Float attachment, wing, right	1	
-15	63315-00		HEAD - Cylinder, main landing gear	2	
-16	68087-00		STEP ASSEMBLY - Left rear	1	
	68087-01		STEP ASSEMBLY - Right rear	1	
-17	62016-10		SEAL - Float attachment, wing	2	
-18	480 083		PAD - (3037)	4	
-19	452 395		BEARING - (KP12A)	1	
-20	454 173	W	CAP - Brake line fitting (AN929-4)	2	
-21	68196-02		SPACER - Float strut wire	1	
-22	68196-03		SPACER - Float strut wire	1	
-23	65003-32		BUSHING - Float strut wire spacer	1	
-24	68196-00		STEP ASSEMBLY - Left front	1	
	68196-01		STEP ASSEMBLY - Right front	1	
-25	68217-00		PLATE - Float, wing	2	
-26	68284-00		TIE ROD ASSEMBLY - Drag truss	2	
-27	68240-00		Tie rod assembly, wing	2	
-28	68240-02		Tie rod assembly, forward	2	
-29	400 869		BOLT - Clevis (AN23-9A)	12	
	407 564	W	WASHER - (AN960-10)	12	
	407 584	W	WASHER - (AN960-10L)	12	
	404 887	W	NUT - (MS20365-1032C)	12	
-30	400 860	W	BOLT - Clevis (AN23-8A)	12	
	407 564	W	WASHER - (AN960-10)	12	
	407 584	W	WASHER - (AN960-10L)	12	
	404 887	W	NUT - (MS20365-1032C)	12	
-31	402 508		BOLT - (AN175-6A)	2	
	401 956		BOLT - Eye (AN49-9)	2	
	462 056		GASKET - (AN800-8)	2	
	407 589	W	WASHER - (AN960-816)	2	
-32	401 918	W	BOLT - (AN74A-3)	12	
-33	403 097	W	BOLT - (AN4-C6)	2	
	407 675	W	WASHER - (AN960-C416)	2	
	404 868	W	NUT - (MS20365-426C)	2	

Figure and Index Number	Part Number	Code	NOMENCLATURE	No. Req.	SERIAL NUMBERS AFFECTED
57-34	403 097	W	BOLT - (AN4-C6)	2	
	407 675	W	WASHER - (AN960-C416)	2	
	404 868	W	NUT - (MS20365-428C)	2	
-35	401 333	W	BOLT - (AN4-35A)	4	
	407 585	W	WASHER - (AN960-416L)	16	
	404 888	W	NUT - (MS20365-428C)	4	
-36	401 168	W	BOLT - (AN5-10A)	2	
	407 656	W	WASHER - (AN960-516)	2	
	404 889	W	NUT - (MS20365-524C)	2	
-37	401 351	W	BOLT - (AN5-22A)	2	
	407 656	W	WASHER - (AN960-516)	2	
-38	400 441	W	BOLT - (AN3-7A)	8	
	404 897	W	NUT - (MS20365-1032C)	8	
-39	415 374	W	SCREW - (MS51957-42)	12	
	404 810	W	NUT - (MS20365-832C)	12	
-40	407 694		WASHER - (AN960-C1216L)	2	

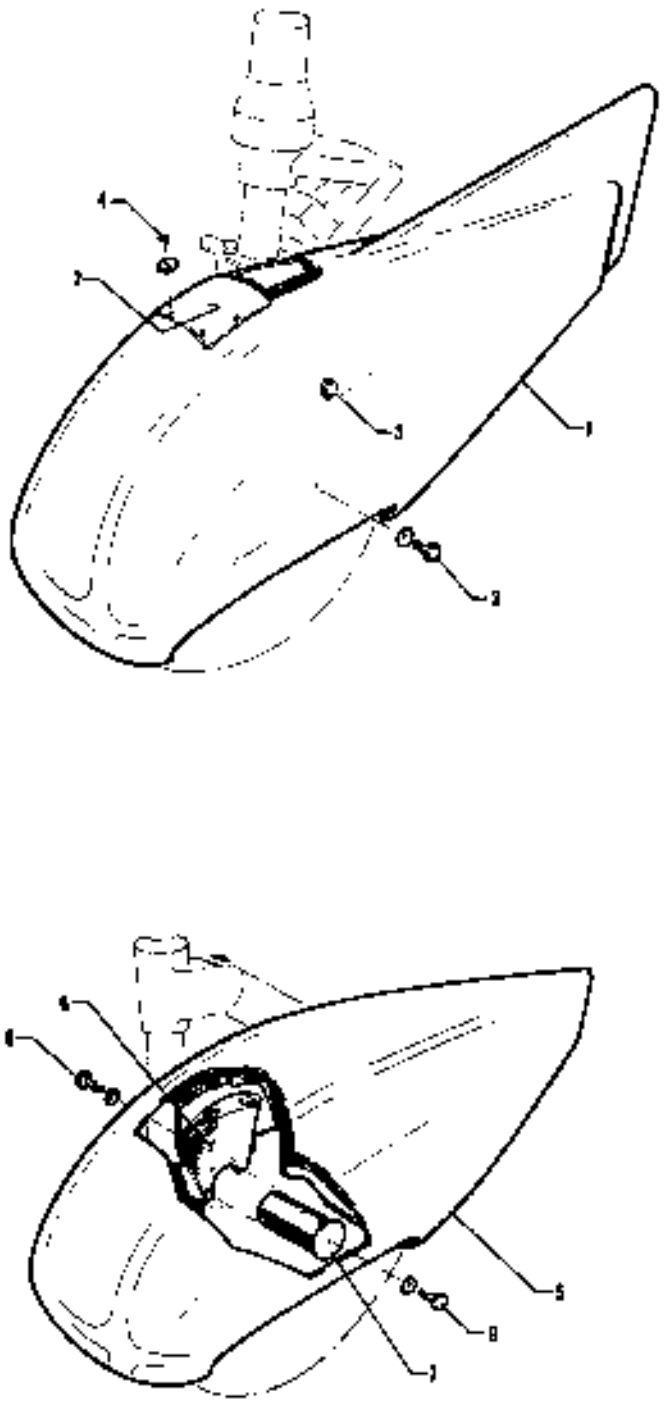

Figure 6B. Main and Nose Wheel Fairing Installation
(PA-32-260 - Serial Nos. 32-1 to 32-7700023 inclusive)
(PA-32-300 - Serial Nos. 32-40000 to 32-7740113 inclusive)

CODE EXPLANATIONS FOR FIGURE 68

A - Used on PA-32-260 with serial numbers 32-1 to 32-7700023 inclusive, and PA-32-300 with serial numbers 32-40000 to 32-7740113 inclusive

B - Used on PA-32-260 with serial numbers 32-7400001 to 32-7400061 inclusive, and PA-32-300 with serial numbers 32-7440001 to 32-7440162 inclusive

C - Used on PA-32-260 with serial numbers 32-1 to 32-7100006 inclusive, and PA-32-300 with serial numbers 32-40000 to 32-7140023 inclusive

D - Used on PA-32-260 with serial numbers 32-7100007 and up, and PA-32-300 with serial numbers 32-7140024 and up

E - Used on PA-32-260 with serial numbers 32-1 to 32-7300076 inclusive, 32-7500001 and up, and PA-32-300 with serial numbers 32 40000 to 32-7340201 inclusive, 32-7540001 and up

W - These parts must be ordered from Service Spares Department, Piper Aircraft, Lock Haven, Penna

PIPER PARTS CATALOG

Figure and Index Number	Part Number	Code	NOMENCLATURE	No Req	SERIAL NUMBERS AFFECTED
58-	65348	E	DRAWING - Nose Wheel Fairing Installation		
	76417	B	DRAWING - Nose Wheel Fairing Installation		
	65237		DRAWING - Main Wheel Fairing Installation		
-1	65331-00	E	FAIRING ASSEMBLY - Nose Wheel	1	
	76415-06	B	FAIRING ASSEMBLY - Nose wheel	1	
2	65332-00	E	COVER - Nose wheel fairing	1	
	65332-03	B	COVER - Nose wheel fairing	1	
-3	401 310	W	BOLT - (AN4-10A)	4	
	407 565	W	WASHER - (AN960-416)	4	
-4	415 449	W	SCREW - (AN526-832R8)	4	
	477 674		NUT - (MU-832-45-05/ 075-L-101	4	
5	65203-00	C	FAIRING ASSEMBLY - Main wheel, left	1	
	65203-02	D	FAIRING ASSEMBLY - Main wheel, left	1	
	65203-01	C	FAIRING ASSEMBLY - Main wheel, right	1	
	65203-03	D	FAIRING ASSEMBLY - Main wheel, right	1	
6	63370-06		BRACKET ASSEMBLY - Wheel fairing, left	1	
	63370-04		BRACKET ASSEMBLY - Wheel fairing, right	1	
-7	63373-00		SUPPORT ASSEMBLY - Wheel fairing, main (3.50" long, plug-in type)	2	
	66821-04		SUPPORT ASSEMBLY - Wheel fairing, main (1.50" long, screw-on type)	2	
-8	400 003	W	BOLT - (AN4-6A)	6	
	407 565	W	WASHER - (AN960-416)	8	
9	400 003	W	BOLT - (AN4-6A)	2	
	407 801	W	WASHER - (AN970-4)	2	

When ordering, always specify Part Number, Description and Serial Number of Aircraft

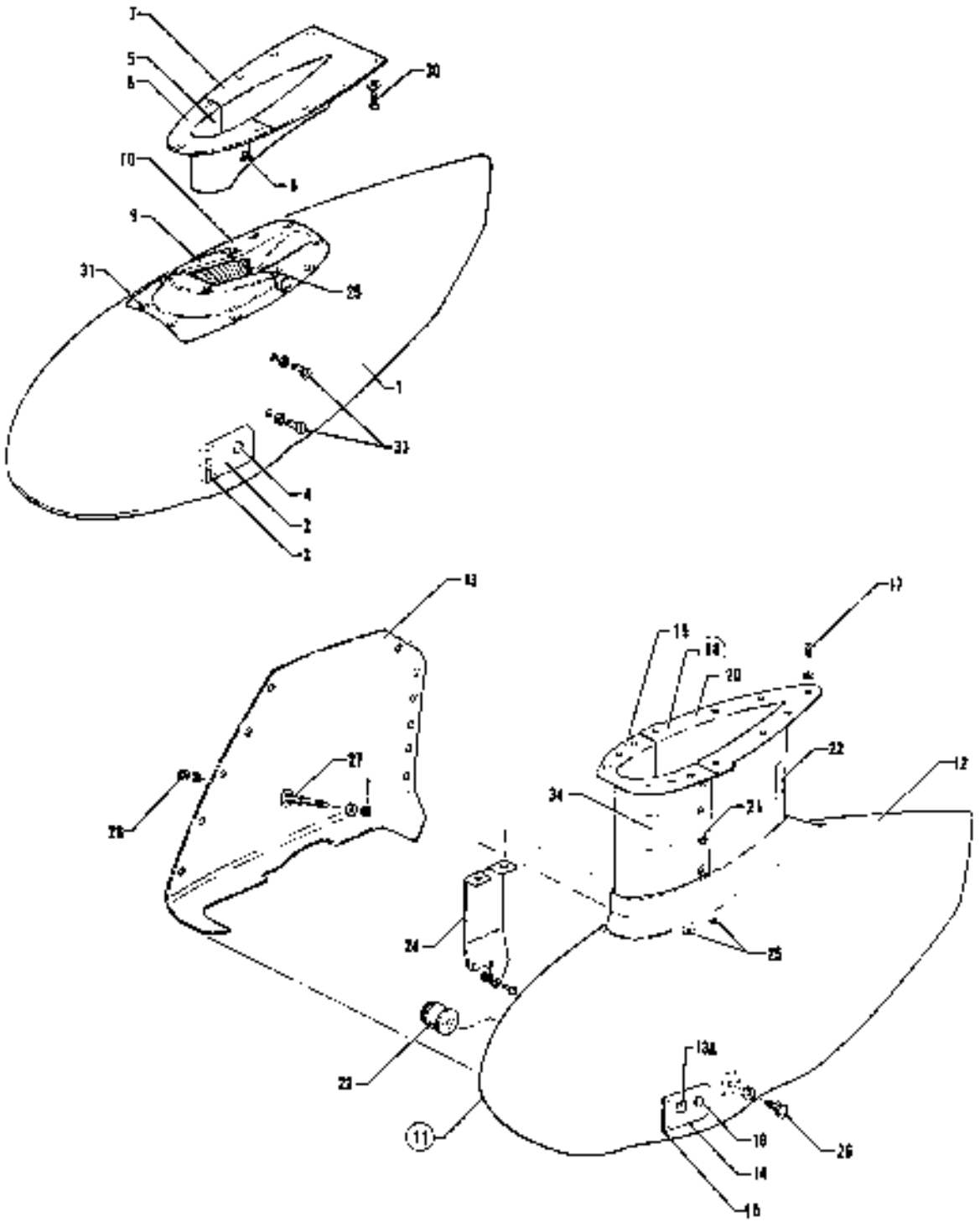

Figure 68A Main and Nose Wheel Fairing Installation
(PA-32-260 - Serial Nos 32-7800001 and up)
(PA-32-300 - Serial Nos 32-7840001 and up)

CODE EXPLANATIONS FOR FIGURE 68A

A - Used on PA-32-260 with serial numbers 32-7900001 and up, and PA-32-300 with serial numbers 32-7840001 and up
B - Used on PA-32-300 only
C - Ascertain if Main Landing Gear Fiberglass Wheel and Strut Fairing Replacement Kit 763 B18V has been installed on PA-32-260 with serial numbers 32-7800001 and up, and PA-32-300 with serial numbers 32-7940001 to 32-7940020 incl per Service Letter 862 (New fiberglass fairings are identified by camloc fasteners attaching inner and outer fairing halves together. Obsolete cycolac fairings are identified by screws, washers and nuts attaching inner and outer fairing halves together.) If Kit 763 B18V has been installed per Service Letter 862, order individual items listed for PA-32-300 with serial numbers 32-7940021 and up as desired. If Kit 763 918V has not been installed on PA-32-260 with serial numbers 32-7800001 and up, and PA-32-300 with serial numbers 32-7840001 to 32-7940020 incl and individual items are desired for a particular wheel, one of the following Main Landing Gear Fiberglass Wheel and Strut Fairing Kits must be ordered as a replacement: 763 956 for left wheel or 763 957 for right wheel. After above listed Kit/Kits have been installed on aircraft, order individual fiberglass items listed for PA-32-300 with serial numbers 32-7940021 and up
D - Used with cycolac fairing assemblies only
E - Used with fiberglass fairing assemblies only
F - Used if nose gear fairing incorporates a door assembly in side of wheel fairing
G - Used if nose gear fairing does not incorporate a door assembly in side of wheel fairing
W - These parts must be ordered from Service Spares Department, Piper Aircraft, Lock Haven, Penna

PIPER PARTS CATALOG

Figure and Index Number	Part Number	Code	NOMENCLATURE	No. Req.	SERIAL NUMBERS AFFECTED
58A-	37896		DRAWING - Nose Wheel Fairing Installation		
	79893		DRAWING - Nose Wheel Fairing Installation (Fiberglass)		
-1	35944-14		FAIRING ASSEMBLY - Nose wheel (fiberglass)	1	
-2	37882-02	D	* DOOR ASSEMBLY - Wheel fairing	1	
-3	37882-04	D	* * HINGE ASSEMBLY - Door	1	
-4	472-017	D	* * LATCH - Door (KM610-32)	1	
-5	37891-02		FAIRING ASSEMBLY - Nose gear strut	1	
-6	37891-06	B	* FAIRING ASSEMBLY - Nose gear strut, forward	1	32-7940254 and up
-7	37891-07	B	* FAIRING ASSEMBLY - Nose gear strut, aft	1	32-7940254 and up
-8	414 762		* SCREW - (MS24693-S51)	4	
	494 101		* WASHER - (PS10092-1-2C)	4	
	477 640		* NUT - (PS10062-5-3)		
-9	37926-03	F	COVER - Nose wheel fairing, forward	1	
	36559-04	G	COVER - Nose wheel fairing, forward	1	
-10	37926-04	F	COVER - Nose wheel fairing, aft	1	
	36559-03	G	COVER - Nose wheel fairing, aft	1	
-11	79890-02	B,C	FAIRING ASSEMBLY - Main wheel, left, complete (fiberglass)	1	32-7940021 and up
	79890-03	B,C	FAIRING ASSEMBLY - Main wheel, right, complete (fiberglass)	1	32-7940021 and up
-12	79890-04	B,C	* FAIRING ASSEMBLY - Main wheel, outboard, left (fiberglass)	1	32-7940021 and up
	79890-05	B,C	* FAIRING ASSEMBLY - Main wheel, outboard, right (fiberglass)	1	32-7940021 and up
-13	79890-07	B,C	* FAIRING ASSEMBLY - Main wheel, inboard, left (fiberglass)	1	32-7940021 and up
	79890-08	B,C	* FAIRING ASSEMBLY - Main wheel, inboard, right (fiberglass)	1	32-7940021 and up
-13a	35669-44	D	* PLACARD - Tire pressure	1	
-14	37882-02		* DOOR ASSEMBLY - Wheel fairing	1	
-15	37882-04		* * HINGE ASSEMBLY - Door	1	
-16	472 017		* * LATCH - Door (KM610-32)	1	
-17	414 793	D	* SCREW - (MS24693-S50)	26	
	494 101	D	* WASHER - (PS10092-1-2C)	26	
	477 640	D	* NUT - (PS10062-5-3)	26	
	587 594	E	* STUD - (PS10077-1-9)	15	
	594 003	E	* SEAL - washer - (85-43-201-38)	15	
	484 428	E	* RETAINER - (PS10077-1-65)	15	
	484 198	E	* RECEPTACLE - (PS10077-1-63)	15	
-18	79892-02	B,C	FAIRING ASSEMBLY - Main gear strut, left complete (fiberglass)	1	32-7940021 and up
	79892-03	B,C	FAIRING ASSEMBLY - Main gear strut, right complete (fiberglass)	1	32-7940021 and up
-19	79892-04	B,C	FAIRING ASSEMBLY - Main gear strut, forward, left (fiberglass)	1	32-7940021 and up
	79892-05	B,C	FAIRING ASSEMBLY - Main gear strut, forward, right, (fiberglass)	1	32-7940021 and up
-20	79892-10	B,C	FAIRING ASSEMBLY - Main gear strut, aft, left (fiberglass)	1	32-7940021 and up
	79892-09	B,C	FAIRING ASSEMBLY - Main gear strut, aft, right (fiberglass)	1	32-7940021 and up

When ordering, always specify Part Number, Description, and Serial Number of Aircraft

PIPER PARTS CATALOG

Figure and Index Number	Part Number	Code	NOMENCLATURE	No. Req.	SERIAL NUMBERS AFFECTED
58A-21	488 218	D	* SCREW - (PS10015-F8-16BL)	8	
	494 037	D,W	* WASHER - (PS10092-1-3C)	8	
	477 818	D	* NUT - (PS10062-5-9)	8	
	587 594	E,W	* STUD - (PS10077-1-9)	8	
	584 003	E	* SEAL - Washer (B5-43-201-38)	8	
	584 140	E	* RETAINER - (PS10077-1-88)	8	
	484 188	E,W	* RECEPTACLE - (PS10077-1-63)	8	
-22	35869-23		PLACARD - Gear	2	
-23	66821-04	D	SUPPORT ASSEMBLY - Wheel fairing, main (1.44 long)	2	
	66821-05	E	SUPPORT ASSEMBLY - Wheel fairing, main (1.62 long)	2	
-24	37880-02		BRACKET ASSEMBLY - Wheel fairing, left	1	
	37880-03		BRACKET ASSEMBLY - Wheel fairing, right	1	
-25	416 633		SCREW - (MS24693-S273)	4	
	494 037	W	WASHER - (PS10092-1-3C)	4	
-26	400 004	W	BOLT - (AN4-7A)	2	
	407 565	W	WASHER - (AN960-416)	2	
-27	37881-02	D	BOLT - Main wheel fairing attachment (3.96 long)	2	
	37881-03	E	BOLT - Main wheel fairing attachment (4.22 long)	2	
-28	407 565	W	WASHER - (AN960-416)	2	
	404 889	W	NUT - (MS20365-428C)	2	
-29	488 218		SCREW - (PS10015-F8-16BL)	2	
	494 101	W	WASHER - (PS10092-1-2C)	2	
	477 818		NUT - (PS10065-5-9)	2	
-30	414 762	W	SCREW - (MS24883-S51)	11	
	494 101	W	WASHER - (PS10092-1-2C)	11	
-31	488 218		SCREW - (PS10015-F8-16BL)	10	
	494 101	W	WASHER - (PS10092-1-2C)	10	
-32	414 518	W	SCREW - (MS24883-S51)	26	
	494 101	W	WASHER - (PS10092-1-2C)	26	
-33	401 312	W	BOLT - (AN4-12A)	4	
	407 565	W	WASHER - (AN960-416L)	4	
-34	65369-00	E	PLACARD - Oleo service instructions	2	

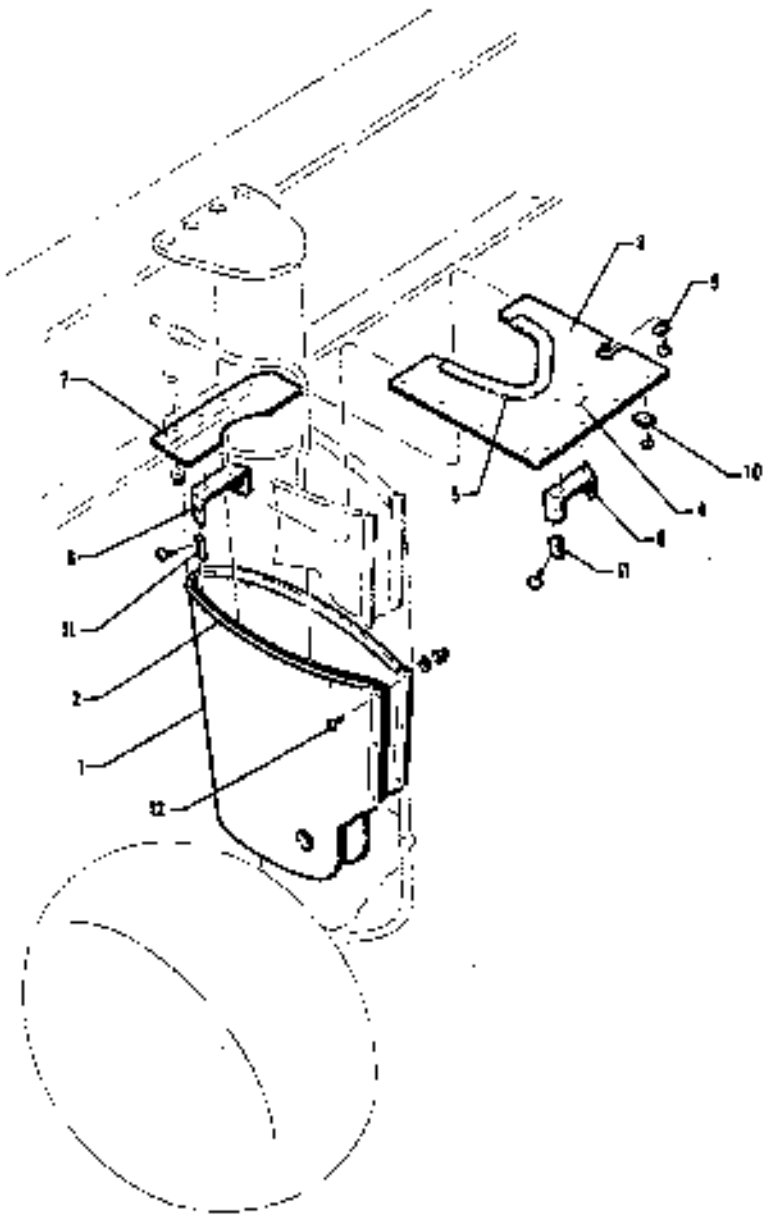

Figure 58. Main Landing Gear Strut Fairing Installation

CODE EXPLANATIONS FOR FIGURE 58

A - Refer to Figure 58A for main gear strut fairings on the PA-32-260 with serial numbers 32-7900001 and up, and PA-32-300 with serial numbers 32-7840001 and up when main wheel fairings are installed

W - These parts must be ordered from Service Spares Department, Piper Aircraft, Lock Haven, Penna

PIPER PARTS CATALOG

Figure and Index Number	Part Number	Code	NOMENCLATURE	No Req	SERIAL NUMBERS AFFECTED
59-	63343		DRAWING - Strut Fairing Installation, Main Landing Gear		32-1 to 32-450 inclusive
	65693		DRAWING - Strut Fairing Installation, Main Landing Gear		32-451 and up
-1	63338-00		FAIRING ASSEMBLY - Main gear	2	
-2	63186-04		* MOULDING - Extruded	1	
3	63339-00		PLATE ASSEMBLY - Fairing, left	1	32-1 to 32-450 inclusive
	63339-01		PLATE ASSEMBLY - Fairing, right	1	32-1 to 32-450 inclusive
	65688-00		PLATE ASSEMBLY - Fairing, left	1	32-451 and up
	65688-01		PLATE ASSEMBLY - Fairing, right	1	32-451 and up
-4	63339-02		* PLATE - Fairing	2	32-1 to 32-450 inclusive
	65688-02		* PLATE - Fairing, left	1	32-451 and up
	65688-03		* PLATE - Fairing, right	1	32-451 and up
-5	63186-33		* MOULDING - Extruded	1	
6	63341-00		* CLIP - Fairing	2	
7	63340-00		PLATE - Fairing, left	1	32-1 to 32-450 inclusive
	63340-01		PLATE - Fairing, right	1	32-1 to 32-450 inclusive
-8	63342-00		CLIP - Fairing	2	
-9	419-920	W	SCREW - (8 x 1/2)	2	32-1 to 32-450 inclusive
	415-448	W	SCREW - (AN526-832R8)	2	32-451 and up
	406-287		NUT - (A9031-8Z-1)	2	32-1 to 32-450 inclusive
-10	419-920	W	SCREW - (8 x 1/2)	8	32-1 to 32-450 inclusive
	415-448	W	SCREW - (AN526-832R8)	8	32-451 and up
	406-373	W	NUT - (NAS395-17-1)	8	32-1 to 32-450 inclusive
-11	419-920	W	SCREW - (8 x 1/2)	4	
	406-373	W	NUT - (NAS395-17-1)	4	
12	415-171		SCREW - (AN526C-632-5)	3	
	407-582	W	WASHER - (AN960-6)	3	
	404-909	W	NUT - (MS20365-832C)	3	

When ordering, always specify Part Number, Description and Serial Number of Aircraft

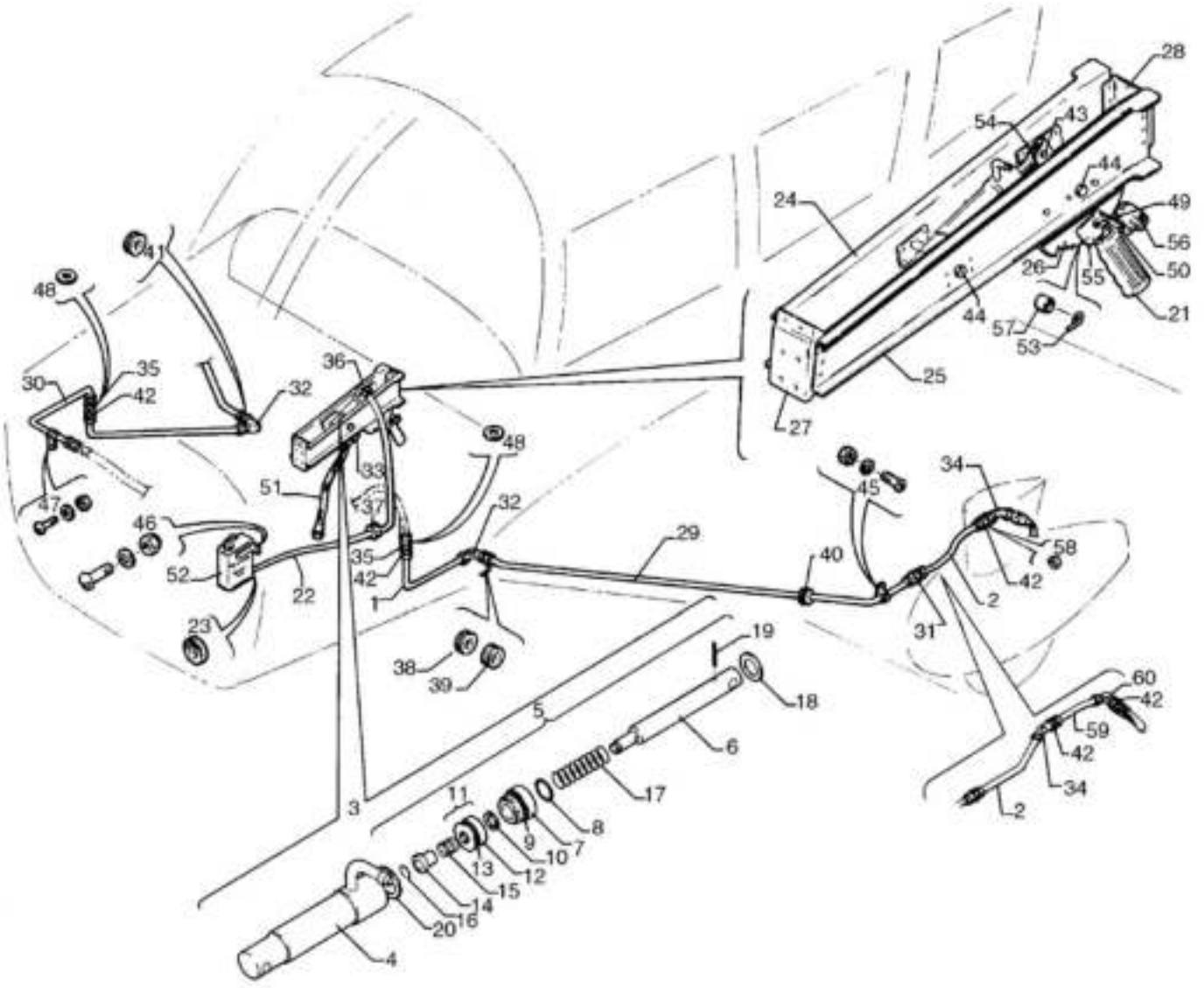

Figure 60. Hand Brake Installation

CODE EXPLANATIONS FOR FIGURE 60

A - Used on PA-32-260 with serial numbers 32-1 to 32-1110 inclusive, and PA32-300 with serial numbers 32-40000 to 32-40565 inclusive.
B - Used on PA-32-260 with serial numbers 32-1111 and up, and PA-32-300 with serial numbers 32-40566 and up.
C - Used on PA-32-260 with serial numbers 32-1111 and up, PA-32-300 with serial numbers 32-40566 and up and PA-32R-300.
D - Used on PA-32-260 and PA-32-300 only.
E - Used on PA-32-300 only.
F - Used on PA-32S-300 Seaplane Model only.

PIPER PARTS CATALOG

Figure and Index Number	Part Number	Code	NOMENCLATURE	No. Req.	SERIAL NUMBERS AFFECTED
60-	68465	A	DRAWING - Hand Brake Installation		
	69312	B	DRAWING - Hand Brake Installation		
	38012	E	DRAWING - Brake System Installation		
-1	63324-04		LINE ASSEMBLY	2	
-2	63325-00	D	LINE ASSEMBLY	2	
	67338-00	E	LINE ASSEMBLY	2	
-3	455 938		CYLINDER ASSEMBLY - Master (10-22)	1	
-4	753 956		* HYDRAULIC CLYLINDER ASSEMBLY - (189-9)	1	
-5	755 948		* PISTON ROD ASSEMBLY - (182-7)	1	
-6	755 949		* * ROD - Piston (142-9)	1	
-7	751 889		* * GLAND - Packing (141-10)	1	
-8	484 701		* * PACKING - “O” Ring (AN6227-7)	1	
-9	484 727		* * PACKING - “O” Ring (AN6227-12)	1	
-10	753 172		* * WASHER - Dyna-seal (110-3/16)	1	
-11	757 216		* * PISTON ASSEMBLY - (92-19)	1	
-12	757 217		* * * PISTON - (148-10)	1	
-13	484 706		* * * PACKING - “O” Ring (AN6227-11)	1	
-14	753 381		* * BUSHING - (145-15)	1	
-15	756 117		* * SPRING - (82-8)	1	
-16	752 855		* * RING - Snap (155-5)	1	
-17	756-118		* * SPRING - (82-9)	1	
-18	690 629		* * WASHER - (NAS1149F0663P)	1	
-19	755 882		* * ROLL PIN - (223-1)	1	
-20	755 950		* * RING - Snap (155-10)	1	
-21	463 380		GRIP - Brake handle	1	
-22	63913-49	D	HOSE - Flexible	1	
	63913-132	E	HOSE - Flexible	1	
-23	63915-06		DISC - Firewall sealing	1	
-24	68468-00	A	CHANNEL ASSEMBLY - Brake support, right	1	
	67138-00	C	CHANNEL ASSEMBLY - Brake support, right	1	
-25	68462-00	A	CHANNEL ASSEMBLY - Brake support, left	1	
	67137-00	C	CHANNEL ASSEMBLY - Brake support, left	1	
-26	63354-00		* RATCHET - Brake handle	1	
-27	68463-00	A	CHANNEL - Brake support, forward	1	
	67139-00	C	CHANNEL - Brake support, forward	1	
-28	62649-00	A	CHANNEL - Brake support, aft	1	
	67140-02	C	CHANNEL - Brake support, aft	1	
-29	68467-00		LINE ASSEMBLY	2	
-30	68466-00		LINE ASSEMBLY - Right	1	
-31	491 050		UNION - (AN815-4D)	2	
-32	458 880		ELBOW - (AN821-4D)	2	
-33	458 894		ELBOW - (MS20822-4D)	1	
-34	458 910		ELBOW - (AS1040D0404)	2	
-35	491 060		UNION - (AN832-4D)	2	
-36	554 998		CLAMP - Hose (GS4 Type F)	2	
-37	63976-17		GROMMET	1	
-38	434 132		GROMMET - (MS35489-19)	1	
-39	434 155		GROMMET - (MS35489-7S)	2	
-40	434 131		GROMMET - (MS35489-10)	2	
-41	434 132		GROMMET - (MS35489-19)	1	
-42	477 618		NUT - (AS5178D04)	6	
-43	424 178		PIN - (MS20392-2C19)	1	
	424 051		COTTER PIN - (MS24665-132)	1	
	690 609		WASHER - (NAS1149F0332P)	2	

PIPER PARTS CATALOG

Figure and Index Number	Part Number	Code	NOMENCLATURE	No. Req.	SERIAL NUMBERS AFFECTED
60-44	400 113		BOLT - (AN4-20)	2	
	690 611		WASHER - (NAS1149F0463P)	6	
	404 101		NUT - (AN310-4)	2	
	424 051		COTTER PIN - (MS24665-132)	2	
-45	411 532		SCREW - (MS35207-263)	4	
	690 609		WASHER - (NAS1149F0332P)	4	
	404 526		NUT - (MS21042-3)	4	
-46	411 531		SCREW - (MS35207-262)	2	
	690 617		WASHER - (NAS1149C0363R)	4	
	404 526		NUT - (MS21042-3)	2	
-47	411 534		SCREW - (MS35207-265)	1	
	407 043		WASHER - (MS35338-43)	1	
	404 224		NUT - (AN315-3R)	1	
-48	690 630		WASHER - (NAS1149F0763P)	4	
-49	400 876		BOLT - (AN23-24A)	1	
	690 612		WASHER - (NAS1149F0363P)	3	
	404 526		NUT - (MS21042-3)	1	
-50	411 530		SCREW - (MS35207-261)	1	
	407 124		WASHER - Lock (AN935-10L)	1	
-51	63901-30		HOSE ASSEMBLY - Flexible	1	
-52	68464-00		RESERVOIR ASSEMBLY - Brake cylinder	1	
-53	63356-00		SPRING - Brake handle	1	
-54	63357-00		HANDLE ASSEMBLY - Brake	1	
-55	63358-00	A	LATCH ASSEMBLY - Brake handle	1	
	67135-03	C	LATCH ASSEMBLY - Brake handle	1	
-56	63914-07		KNOB ASSEMBLY - Parking brake	1	
-57	63900-131		BUSHING	1	
-58	454 173	F	CAP - (AN929-4)	2	32S-40000 to 32S-7240147 incl.
-59	67549-00	E	LINE ASSEMBLY	2	
-60	458 900	E	ELBOW - Bulkhead (AN833-4D)	2	

When ordering, always specify Part Number, Description, and Serial Number of Aircraft

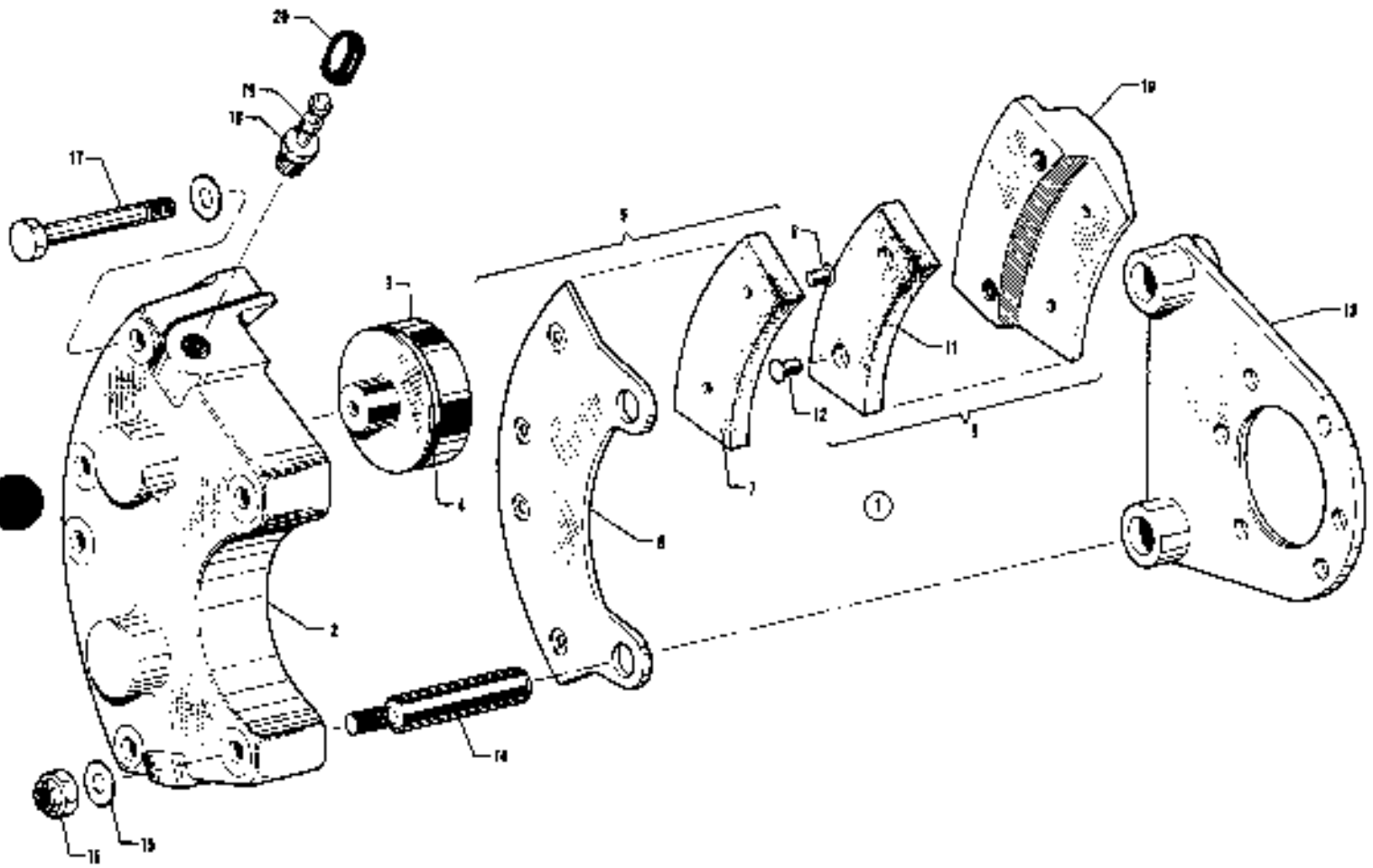

Figure 61. Brake Assembly

CODE EXPLANATIONS FOR FIGURE 61

A - Used on Brake Assembly 30-83A only
B - Used on Brake Assembly 30-65 only
W - These parts must be ordered from Service Spares Department, Piper Aircraft, Lock Haven, Penna

PIPER PARTS CATALOG

Figure and Index Number	Part Number	Code	NOMENCLATURE	No. Req.	SERIAL NUMBERS AFFECTED
61-1	551 706		BRAKE ASSEMBLY - (30-65)	2	
	551 725		BRAKE ASSEMBLY - (30-83A) (heavy duty)	2	
-2	753 936	B	* CYLINDER - Brake (61-18)	1	
	758 093	A	* CYLINDER - Brake (61-25)	1	
-3	755 887	B	* PISTON - (62-15)	2	
	757 483	A	* PISTON ASSEMBLY - (92-18)	2	
-4	484 698	B	* “O” RING - (AN6227-27)	2	
-5	757 207	B	* PLATE ASSEMBLY - Pressure (73-10)	1	
	757 485	A	* PLATE ASSEMBLY - Pressure (73-16)	1	
-6	757 208	B	* * PLATE - Pressure (63-11)	1	
-7	752 342	B	* * LINING - Pressure plate (66-105)	2	
	761 197	A	* * LINING - Pressure plate (66-62)	2	
-8	752 826	B	* * RIVET - Pressure plate lining (561)	4	
-9	755 885	B	* PLATE ASSEMBLY - Back (74-10)	2	
	757 484	A	* PLATE ASSEMBLY - Back (74-30)	2	
-10	755 886	B	* * PLATE - Back (64-15)	2	
-11	752 342	B	* * LINING - Back plate (66-105)	2	
	761 197	A	* * LINING - Back plate (66-62)	2	
-12	752 826	B	* * RIVET - Back plate lining (561)	4	
-13	451 786		* TORQUE PLATE ASSEMBLY - (75-39)	1	
-14	753 407		* BOLT - Anchor (69-4)	2	
-15	407 585		* WASHER - (AN960-416L)	6	
-16	404 888		* NUT - (AN365-428)	2	
-17	753 430		* BOLT - (LP4-20AM)	4	
-18	752 966		* SEAT - Bleeder (37-206)	1	
-19	752 965		* SCREW - Bleeder (FC-6446)	1	
-20	753 850		* CAP - Bleeder (183-1)	1	

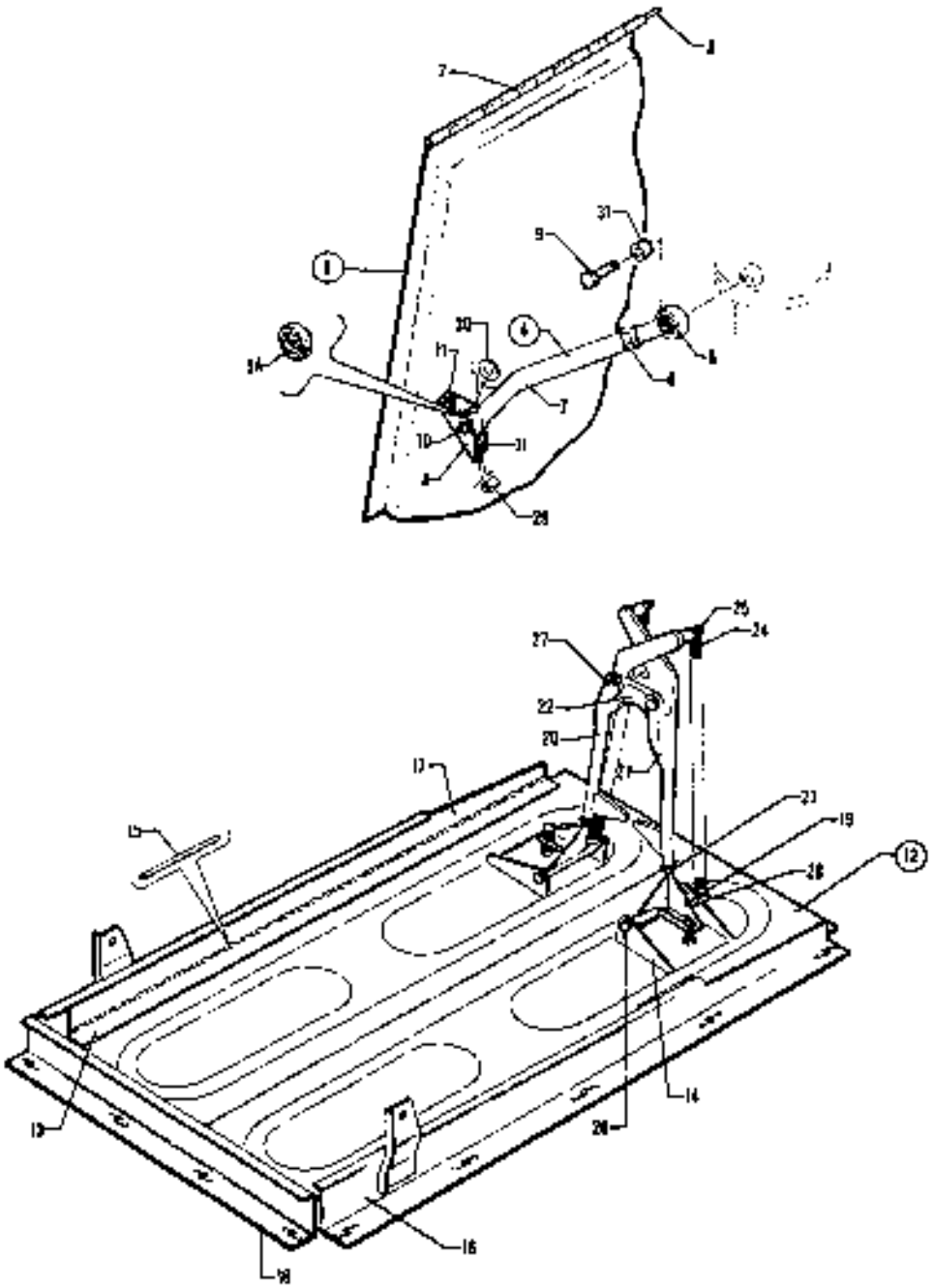

Figure 62 Landing Gear Door Installation

CODE EXPLANATIONS FOR FIGURE 62

W - These parts must be ordered from Service Spares Department, Piper Aircraft, Lock Haven, Penna.

PIPER PARTS CATALOG

Figure and Index Number	Part Number	Code	NOMENCLATURE	No. Req.	SERIAL NUMBERS AFFECTED
62-	38069		DRAWING - Nose Gear Door Installation		
	95912		DRAWING - Main Gear Installation		
-1	67090-10		DOOR ASSEMBLY - Main gear, left	1	
	67090-11		DOOR ASSEMBLY - Main gear, right	1	
-2	67093-04		* HINGE HALF - Main gear door, left	1	
	67093-05		* HINGE HALF - Main gear door, right	1	
-3	63744-11		PIN - Hinge, main gear door	2	
-4	37722-02		ROD ASSEMBLY - Main gear door	2	
-5	452 335		* BEARING - Rod end (PS10020-2-1RX)	1	
-5a	452 584		* BEARING - (PS10020-7-3)	1	
-6	404 321		* NUT - (AN316-C4R)	1	
-7	37722-03		* ROD ASSEMBLY	1	
-8	67091-00		BRACKET - Main gear door	2	
-9	401 257		BOLT - (AN3CH-10A)	2	
	407 674		WASHER - (AN960-C10)	2	
	407 682		WASHER - (AN960-C10L)	4	
-10	400 867		BOLT - (AN23-15A)	2	
	407 674		WASHER - (AN960-C10)	4	
	404 887		NUT - (MS20365-1032C)	2	
-11	416 993		SCREW - (AN526-1032R14)	4	
	407 564		WASHER - (AN960-10)	4	
	404 887		NUT - (MS20365-1032C)	4	
-12	38070-00		DOOR ASSEMBLY - Nose gear, left	1	
	38070-01		DOOR ASSEMBLY - Nose gear, right	1	
-13	38070-04		* HINGE HALF - Nose gear door	2	
-14	38075-00		* CHANNEL - Nose gear door	1	
-15	189 315		PIN - Hinge gear door (21” length)	2	
-16	38076-00		SUPPORT ASSEMBLY - Nose gear door, left	1	
	38076-01		SUPPORT ASSEMTLY - Nose gear door, right	1	
-17	38076-04		* HINGE HALF - Nose gear door, left	1	
	38076-05		* HINGE HALF - Nose gear door, right	1	
-18	38074-00		CHANNEL ASSEMBLY - Lower cowl support	1	
-19	38071-00		LINK ASSEMBLY - Left nose gear door	1	
	38071-01		LINK ASSEMBLY - Right nose gear door	1	
-20	38108-00		ARM - Right nose gear door	1	
-21	38109-00		ARM - Left nose gear door	1	
-22	38082-00		STRIKER - Nose gear door	1	
-23	404 323		NUT - (AN316-5R)	2	
-24	587 396		SPRING - (PS10087-1-1)	2	
-25	407 585		WASHER - (AN960-416L)	2	
	424 000		COTTER PIN - (MS9245-27)	2	
-26	401 280		BOLT - (AN3-26A)	2	
	38071-08		BUSHING	2	
	407 564		WASHER - (AN960-10)	2	
	404 887		NUT - (MS20365-1032C)	2	
-27	400 871		BOLT - (AN23-19A)	2	
	63900-168		BUSHING	2	
	407 584		WASHER - (AN960-10L)	4	
	407 586		WASHER - (AN960-516L)	2	
	405 350		NUT - (MS21083-N4)	2	
-28	411 533		SCREW - (MS25207-264)	2	
	407 564		WASHER - (AN960-10)	4	
	95061-20		BUSHING	2	
	404 887		NUT - (MS20365-1032C)	2	
-29	63900-31		BUSHING - (.19 long)	2	
-30	62833-103		WASHER	2	
-31	63900-147		BUSHING	2	

When ordering, always specify Part Number, Description, and Serial Number of Aircraft

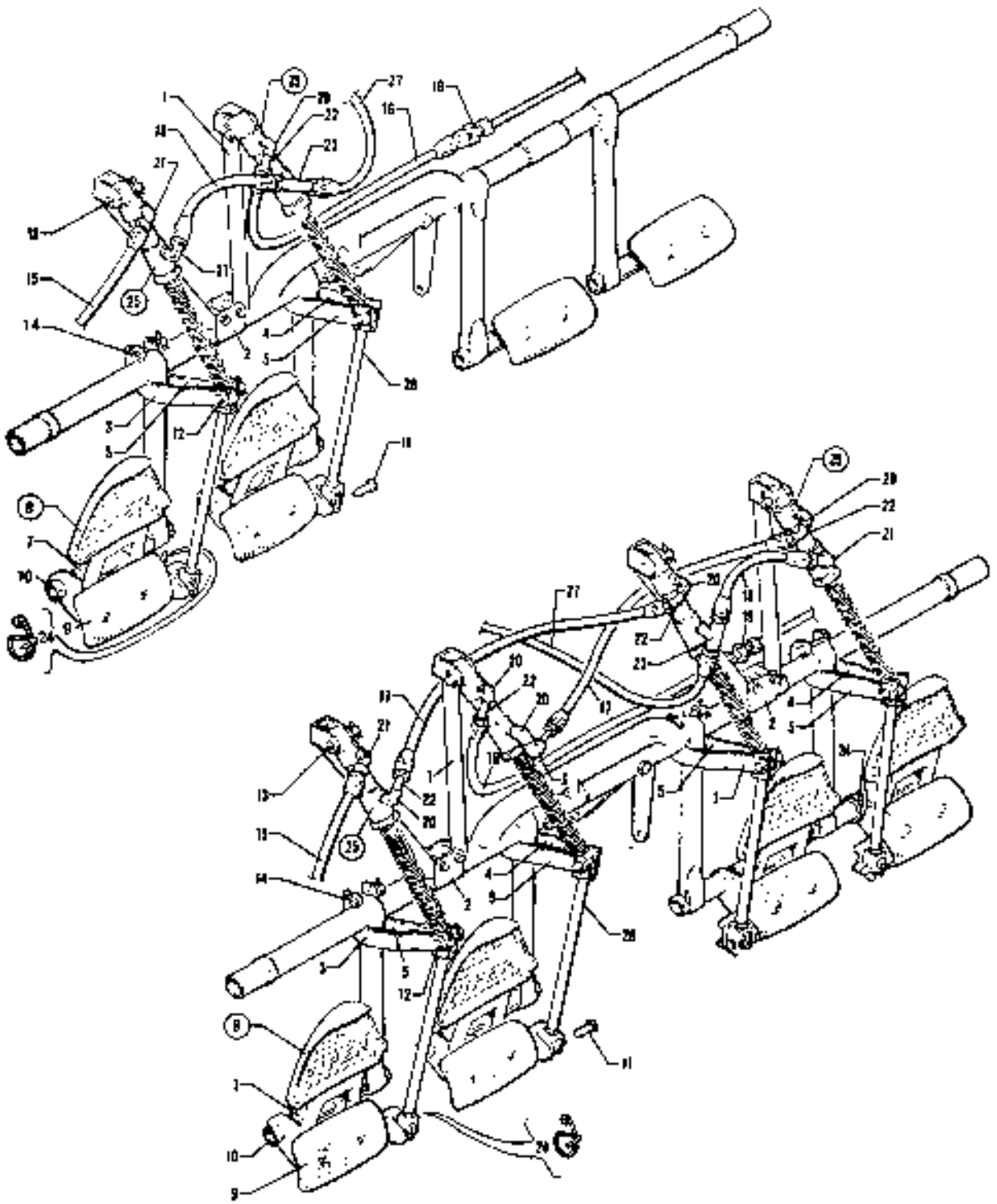

Figure 63 Toe Brake Installation

CODE EXPLANATIONS FOR FIGURE 63

A - See Figure 64 for component parts.
B - Used on PA-32-260 with serial numbers 32-7400001 and up, PA-32-300 with serial numbers 32-7440001 and up, and PA-32R-300.
C - Used on PA-32-260 with serial numbers 32-1 to 32-1110 inclusive, and PA-32-300 with serial numbers 32-40000 to 32-40565 incl.
D - Used on PA-32-260 with serial numbers 32-1111 and up, and PA-32-300 with serial numbers 32-40566 and up.
E - Used on PA-32-260 with serial numbers 32-1 to 32-7300076 inclusive, and PA-32-300 with serial numbers 32-40000 to 32-7340201 inclusive.
F - Used on PA-32-260 with serial numbers 32-7400001 and up, PA-32-300 with serial numbers 32-7440001 and up.
G- Used on PA-32R-300 only.
H - Used on PA-32-260 and PA-32-300 only.
J - No longer available. Order Master Cylinder Assembly 455 968 (Cleveland 10-30) or 455 944 (Gar-Kenyon 17000) as a replacement.
K - Reference latest revision to Piper Service Letter 700, applicable to PA-32-260 with serial numbers 32-7400001 to 32-7400029 incl., and PA-32-300 with serial numbers 32-7440001 to 32-7440086 incl. Installing Toe Brake System Modification Kit 760-842 will preclude the possibility of the brakes being activated during aircraft ground turning operations.

PIPER PARTS CATALOG

Figure and Index Number	Part Number	Code	NOMENCLATURE	No. Req.	SERIAL NUMBERS AFFECTED
63-	63475	E	DRAWING - Single Toe Brake Line Installation		
	63476	H	DRAWING - Dual Toe Brake Installation		
	38012	G	DRAWING - Brake System Installation		
	68450	C	DRAWING - Control System Installation		
	69372	D	DRAWING - Control System Installation		
	38003	G	DRAWING - Control System Installation		
-1	63464-05		BRACE ASSEMBLY - Toe brake	2	
-2	63468-00		BRACKET - Toe brake	2	
-3	63469-00		ARM - Toe brake	2	
-4	63469-01		ARM - Toe brake	2	
-5	63470-00		ARM - Toe brake	4	
-6	458 894		ELBOW - (MS20822-4D)	1	
-7	63478-00		SPACER - Toe pedal	4	
-8	63485-00		PEDAL ASSEMBLY - Toe brake, left inboard	1	
	63485-02		PEDAL ASSEMBLY - Toe brake, left outboard	1	
	63485-01		PEDAL ASSEMBLY - Toe brake, right inboard	1	
	63485-03		PEDAL ASSEMBLY - Toe brake, right outboard	1	
-9	62867-02		* PAD ASSEMBLY - Brake pedal	1	
-10	453 714		BEARING - Brake pedal (PS10065-37)	8	
-11	424 177	E	PIN - Flat head (MS20392-2C17)	4	
	424 195	F	PIN - Flat head (MS20397-2C13)	4	
	424 176	G	PIN - Flat head (MS20392-2C15)	4	
-12	424 181		PIN - Flat head (MS20392-2C25)	4	
-13	424 184		PIN - Flat head (MS20392-2C31)	4	
-14	424 357		PIN - Flat head (MS20392-2C39)	4	
	424 051	K	PIN - (MS24665-132)	8	
-15	63901-28		HOSE ASSEMBLY - Flexible	1	
-16	63901-09		HOSE ASSEMBLY - Flexible	1	
-17	63901-29		HOSE ASSEMBLY - Flexible	2	
-18	63901-30		HOSE ASSEMBLY - Flexible	1	
-19	491 050		UNION - (AN815-4D)	1	
-20	458 904		ELBOW - (AN914-1D)	5	
-21	458 894		ELBOW - (MS20822-4D)	2	
-22	458 891		ELBOW - (MS20823-4D)	4	
-23	488 499		TEE - (MS20825-4D)	1	
-24	63549-00		CLIP - Spring, left outboard pedal	2	
-25	455 948	A,J	CYLINDER ASSEMBLY - Master (10-27) Cleveland	4	
	455 968	A	CYLINDER ASSEMBLY - Master (10-30) Cleveland	4	
	455 944	A	CYLINDER ASSEMBLY - Master (17000) Gar-Kenyon	4	
-26	63474-00	E	CLEVIS ASSEMBLY - Toe brake (adjustable)	4	
	66780-00	E,K	CLEVIS ASSEMBLY - Toe brake (non-adjustable)	4	
	79430-00	B,K	CLEVIS ASSEMBLY - Toe brake (non-adjustable)	4	
-27	63901-65		HOSE ASSEMBLY - Flexible	1	

When ordering, always specify Part Number, Description, and Serial Number of Aircraft

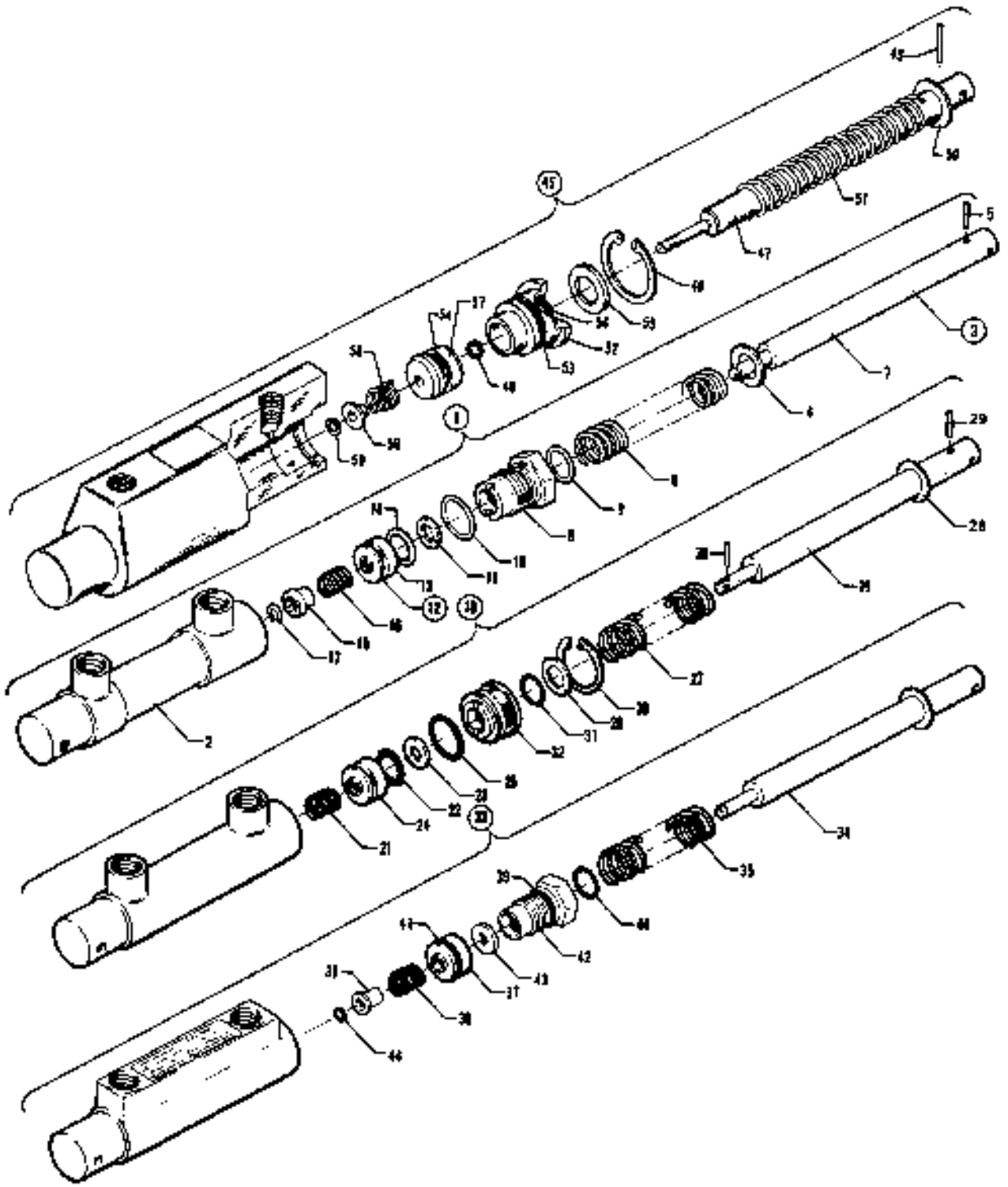

Figure 84 Toe Brake Master Cylinder Assembly

CODE EXPLANATIONS FOR FIGURE 64

A - No longer available. Order Master Cylinder Assembly 455 968 (Cleveland 10-30) or 455 944 (Gar-Kenyon 17000) as a replacement
W - These parts must be ordered from Service Spares Department, Piper Aircraft, Lock Haven, Penna

PIPER PARTS CATALOG

Figure and Index Number	Part Number	Code	NOMENCLATURE	No Req.	SERIAL NUMBERS AFFECTED
64-1	455 932	A	CYLINDER ASSEMBLY - Master (10-20)	4	
-2	753 917		* HYDRAULIC CYLINDER ASSEMBLY - (189-8)	1	
-3	755 918		* PISTON ROD ASSEMBLY - (182-6)	1	
-4	407 587	W	* * WASHER - (AN960-616)	1	
-5	756 882		* * ROLL PIN - (223-1)	1	
-6	758 118	W	* * SPRING - (82-9)	1	
-7	755 917		* * ROD - Piston (142-8)	1	
-8	766 810	W	* * GLAND - Packing (141-5)	1	
-9	484 701	W	* * PACKING - "O" Ring (AN6227-7)	1	
-10	484 706	W	* * PACKING - "O" Ring (AN6227-11)	1	
-11	753 172	W	* * WASHER - Dyna-seal (110-3/16)	1	
-12	765 867	W	* * PISTON ASSEMBLY - (92-15)	1	
-13	755 858	W	* * * PISTON (149-9)	1	
-14	484 749		* * * PACKING - "O" Ring (AN6227-8)	1	
-15	753 381	W	* * BUSHING - (145-15)	1	
16	766 117	W	* * SPRING - (82-8)	1	
-17	762 865	W	* * RING - Snap (155-5)	1	
-18	455 948	A	CYLINDER ASSEMBLY - Master (10-27) Cleveland	4	
-19	757 316		* PISTON ROD ASSEMBLY - (182-01100)	1	
-20	757 317		* * ROLL PIN - (223-00600)	1	
-21	757 580		* * SPRING - (082-02100)	1	
-22	484 748		* * "O" RING - (AN6227-8)	1	
-23	756 620		* * WASHER - Seal (095-25200)	1	
-24	757 437		* * PISTON - (148-01200)	1	
-25	484 706	W	* "O" RING - (AN6227-11)	1	
-26	756 621		* WASHER - Wiper (095-01900)	1	
-27	758 118	W	* SPRING - (82-9)	1	
-28	766 622		* WASHER - (095-10100)	1	
-29	757 318		* ROLL PIN - (223-00600)	1	
-30	756 019		* RETAINING RING - (155-01200)	1	
-31	484 701	W	* "O" RING - (AN6227-7)	1	
-32	756 028		* GLAND - Packing (141-01200)	1	
-33	455 944		CYLINDER ASSEMBLY - Master (17000) Gar-Kenyon	4	
-34	757 490		* PISTON ROD AND RING ASSEMBLY - (85404) includes spring retaining ring	1	
35	762 276		* SPRING - (17006)	1	
-36	762 277		* SPRING - (17008)	1	
-37	757 479		* PISTON - (17003)	1	
38	762 275		* SLEEVE - (17007)	1	
-39	752 584		* "O" RING - (MS28775-113)	1	
-40	484 708		* "O" RING - (MS28775-012)	1	
-41	752 585		* "O" RING - (MS28775-110)	1	
-42	754 848		* FITTING - (17002)	1	
-43	494 177		* SEAL - (110 3/16)	1	
-44	762 531		* RING - Retaining (XRC-313)	1	
-45	455 968		CYLINDER ASSEMBLY - Master (10-30) Cleveland	4	
-46	762 587		* RING - Snap (155-47)	1	
-47	763 461		* PISTON ROD ASSEMBLY - (182-22)	1	
-48	762 586		* * "O" RING - (101-1)	1	
-49	757 319		* * ROLL PIN - (223-00500)	1	
-50	756 622		* * WASHER - (095-10100)	1	
-51	758 118	W	* * SPRING - (82-9)	1	
-52	755 082		* * GLAND - Packing (141-26)	1	
-53	756 018		* * "O" RING - (101-01100)	1	
-54	766 016		* * "O" RING - (101-00800)	2	
-55	756 621		* * WASHER - Wiper (095-01900)	1	
-56	757 580		* * SPRING - (082-02100)	1	
-57	753 450		* * PISTON - (148-25)	1	
-58	758 457		* * BUSHING - (145-58)	1	
-59	762 586		* * RING - Snap (75304-15)	1	

When ordering, always specify Part Number, Description and Serial Number of Aircraft

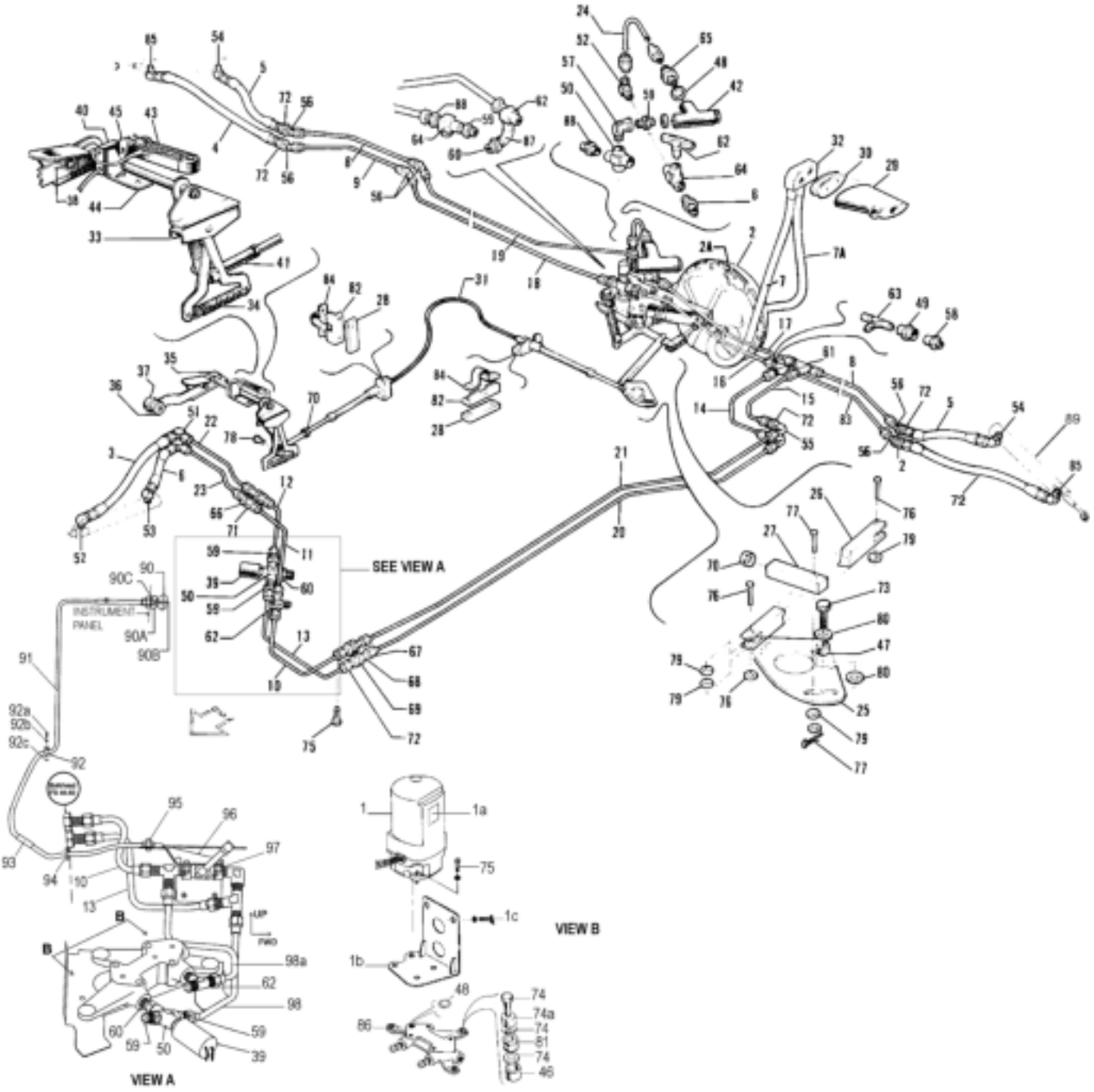

Figure 65. Hydraulic System Installation
(With Backup Landing Gear Extender Installed)

CODE EXPLANATIONS FOR FIGURE 65

A - No longer available. Order Gear Extension Flasher Replacement Kit 763 816 for serial numbers 32R-7680001 to 32R-7880032 inclusive. If Gear Extension Flasher Replacement Kit 763 816 has previously been installed on above serial number aircraft, refer to Figure 101 for replacement flasher.

B - These parts are used on Backup Landing Gear Extender for serial numbers 32R-7680001 thru 32R-7880068. Reference latest revision to Piper Service Bulletin 866. Backup Landing Gear Extender Removal Kit 765 199 must be purchased if Backup Landing Gear Extender removal is desired.

C - Reference latest revision to Piper Service letter 808, applicable to PA-32R-300 aircraft with serial numbers 7680001 to 32R-778023 incl. The electrical connectors on the ends of the wires coming from they hydraulic pump motor could be improperly crimped.

D - Reference latest revision to Piper Service Letter 791, applicable to PA-32R-300 with serial numbers 32R-7680001 to 32R-7680399 incl. Electrical System Refinement Field Modification Kit 761-087 provides parts and instructions for adding a clamp to the wiring harness at the hydraulic pump access door opening to preclude the possibility of damage to the harness during servicing.

PIPER PARTS CATALOG

Figure and Index Number	Part Number	Code	NOMENCLATURE	No. Req.	SERIAL NUMBERS AFFECTED
65 -	38039		DRAWING - Hydraulic Landing Gear Installation		
-1	38992-05	C,D	PUMP ASSEMBLY - Hydraulic	1	
	38998-05	C,D	* PUMP ASSEMBLY - Hydraulic (481 879)	1	
	481 879		* * PUMP - (635 646) (purchase from Oildyne Division)	1	
-1a	87369-72		* PLACARD - Hydraulic fluid spec.	1	
-1b	38996-03		* BRACKET ASSEMBLY - Hydraulic Pump Mount	1	
-1c	401 986		* BOLT - (MS20074-06-05)	2	
	690 629		* WASHER - (NAS1149F0663P)	4	
-2	67748-02	B	ACTUATOR ASSEMBLY - Back-up gear extender	1	
-2a	761 138	B	* DIAPHRAGM REPLACEMENT KIT	1	
-3	63901-09		HOSE ASSEMBLY - Nose gear cylinder	1	
-4	63901-21		HOSE ASSEMBLY - Main gear cylinder	2	
-5	63901-30		HOSE ASSEMBLY - Main gear cylinder	2	
-6	63901-31		HOSE ASSEMBLY - Nose gear cylinder	1	
-7	63913-66	B	HOSE ASSEMBLY - Flexible vacuum (30” L)	1	
-7a	63913-157	B	HOSE ASSEMBLY - Flexible vacuum (36” L)	1	
-8	67700-06		TUBE ASSEMBLY - Main gear cylinder	2	
-9	67700-07		TUBE ASSEMBLY - Main gear cylinder	1	
-10	67700-407		TUBE ASSEMBLY - Nose gear cylinder, top	1	
-11	67700-107		TUBE ASSEMBLY - Nose gear cylinder, top	1	
-12	67700-108		TUBE ASSEMBLY - Nose gear cylinder, bottom	1	
-13	67700-406		TUBE ASSEMBLY - Nose gear cylinder, bottom	1	
-14	67700-110		TUBE ASSEMBLY - Nose gear cylinder, bottom	1	
-15	67700-111		TUBE ASSEMBLY - Nose gear cylinder, top	1	
-16	67700-112		TUBE ASSEMBLY - Main gear, bottom	1	
-17	67700-113		TUBE ASSEMBLY - Main gear, top	1	
-18	67700-114		TUBE ASSEMBLY - Main gear, bottom	1	
-19	67700-115		TUBE ASSEMBLY - Main gear, top	1	
-20	67700-116		TUBE ASSEMBLY - Nose gear, bottom	1	
-21	67700-117		TUBE ASSEMBLY - Nose gear, top	1	
-22	67700-118		TUBE ASSEMBLY - Nose gear, top	1	
-23	67700-119		TUBE ASSEMBLY - Nose gear, bottom	1	
-24	67700-123	B	TUBE ASSEMBLY - Main gear	1	32R-7680001 to 32R-7780204 incl.
-25	38054-00	B	ARM - Automatic landing gear	1	
-26	38053-00	B	PUSHROD - Automatic landing gear	1	
-27	38052-00	B	CONNECTOR - Automatic landing gear	1	
-28	38050-00	B	SPACER - Control cable attachment	2	
-29	67731-00	B	HEAD - Pressure vacuum (unheated)	1	
	67738-00	B	HEAD ASSEMBLY - Pressure vacuum (heated)	1	
-30	67732-00	B	GASKET - Pitot tube	2	
-31	555 816	B	CABLE - Control (PS50146-13-1)	1	
-32	67743-02	B	BLOCK ASSEMBLY - Vacuum head	1	
-33	38185-00	B	CENTERING ASSEMBLY - Landing gear mechanism	1	
-34	67363-00	B	* SPRING - Gear dump	1	
-35	38175-00	B	HANDLE ASSEMBLY - Landing gear mechanism	1	
-36	96718-04	B	* KNOB - Landing gear handle (countersunk for screwhead)	1	
-37	96718-05	B	* KNOB - Landing gear handle (tapped)	1	
-38	38103-02	B	* SPRING	1	
-39	587 847		SWITCH - Pressure (211C243-12)	1	
-40	487 922	B	SWITCH - (1SE-1)	1	
-41	488 327	B	TERMINAL - (AN665-21R)	1	
-42	492 041	B	VALVE - (AN6245-AB4)	1	32R-7680001 to 32R-7780204 incl.
-43	460 901	A,B	FLASHER - (617)	1	
-44	38039-02	B	BRACKET - Switch assembly	1	
-45	451 823	B	ACTUATOR - (JE-73)	1	
-46	65003-21		BUSHING	3	
-47	95061-113		BUSHING	1	

When ordering, always specify Part Number, Description, and Serial Number of Aircraft

PIPER PARTS CATALOG

Figure and Index Number	Part Number	Code	NOMENCLATURE	No. Req.	SERIAL NUMBERS AFFECTED
65-48	484 788		"O" RING - Hydraulic (MS28775-012)	6	
-49	455 173		COUPLING - (AN910-1D)	1	
-50	455 405		CROSS - (AN918-1D)	2	
-51	558 826		ELBOW - (AN821-4)	2	
-52	559 081	B	ELBOW - (MS20822-4)	1	
-53	559 082		ELBOW - (MS20823-4)	1	
-54	558 806		ELBOW - (MS20823-4D)	2	
-55	458 900		ELBOW - (AN833-4D)	2	
-56	458 910		ELBOW - (AS1040D0404)	6	
-57	458 904	B	ELBOW - (AS4854D01)	1	32R-7680001 to 32R-7780204 incl.
-58	67600-00		NIPPLE - Restricted	2	
-59	476 648		NIPPLE - (AN816-4D)	5	
-60	476 643		NIPPLE - (AN911-1D)	2	
-61	488 320		TEE - (AN824-4D)	1	
-62	691-220		TEE - (AS5197W040402)	2	
-63	488 316		TEE - (MS20826-4D)	1	
-64	488 474	B	TEE - (AN917-1D)	1	
-65	491 050	B	UNION - (AN815-4D)	1	32R-7680001 to 32R-7780204 incl.
-66	491 063		UNION (AN832-4)	2	
-67	477 750		NUT - (MS21921-4D)	2	
-68	460 472		SLEEVE - (MS21922-4)	2	
-69	551 876		ADAPTER - (MS21923-4D)	2	
-70	404 224	B	NUT - (AN315-3R)	2	
-71	477 629		NUT - (AS5178-04)	2	
-72	690 630		WASHER - (NAS1149F0763P)	8	
	477 618		NUT - (AS5178D04)	8	
-73	400 441	B	BOLT - (AN3-7A)	1	
	690 609		WASHER - (NAS1149F0332P)	1	
	404 526		NUT - (MS21042-3)	1	
-74	400 443		BOLT - (AN3 12A)	3	
	494 192		WASHER - (5712-45)	6	
-74a	65003-30		BUSHING	3	
-75	401 300		BOLT - (AN4H-13A)	4	
	690 611		WASHER - (NAS1149F0463P)	4	
-76	424 146	B	PIN - (MS20392-1C19)	2	
	690 622		WASHER - (NAS1149CN432R)	2	
	424 026		COTTER PIN - (MS24665-65)	2	
-77	424 147	B	PIN - (MS20392-1C21)	1	
	690 622		WASHER - (NAS1149CN432R)	1	
	424 026		COTTER PIN - (MS24665-65)	1	
-78	424 179	B	PIN - (MS20392-2C21)	1	
	690 609		WASHER - (NAS1149F0332P)	1	
	63900-75		BUSHING	1	
	424 051		COTTER PIN - (MS24665-132)	1	
-79	494 235	B	WASHER - (PS10011-4)	6	
-80	494 040	B	WASHER - (PS10011-12)	2	
-81	434 120		GROMMET - (MS35489-64)	3	
-82	69011-00	B	LUG - Control cable	2	
-83	67700-124		TUBE ASSEMBLY - Main gear cylinder	1	
-84	69012-00	B	CLAMP - Control cable	2	
-85	458 894		ELBOW - (MS20822-40)	2	
-86	38995-02		PAD - Hydraulic Pump Mount (part of 38992-05 pump assy)	1	
-87	458 863	B	ELBOW - (AN916-1D)	1	32R-7780205 and up
-88	67600-00	B	RESTRICTOR	1	
-89	558 010		CYLINDER ASSEMBLY - Hydraulic (96860-03) (Part of Main Gear Installation)	RF	
-90	571 140		KNOB - (2-533-000) Emergency Gear Extender w/ brass insert	1	
-90a	96166-000		CLIP - Retainer	1	
-90b	96167-000		RETAINER - Knob	1	

When ordering, always specify Part Number, Description, and Serial Number of Aircraft

PIPER PARTS CATALOG

Figure and Index Number	Part Number	Code	NOMENCLATURE	No. Req.	SERIAL NUMBERS AFFECTED
65-90c	404 224		NUT - (AN315-3R)	1	
-91	454 225		CABLE ASSEMBLY	1	
-92	454 887		CLAMP	1	
-92a	411 530		SCREW - (MS35207-261)	1	
-92b	690 609		WASHER - (NAS1149F0332P)	1	
-92c	404 526		NUT - (MS21042-3)	1	
-93	63904-082		TUBE	AR	
-94	453 732		GROMMET	1	
-95	66853-000		CLAMP	2	
	400 437		BOLT - (AN3-3A)	2	
	404 526		NUT - (MS21042-3)	2	
-96	89085-005		BRACKET ASSEMBLY	1	
-97	89085-003		VALVE ASSEMBLY	1	
	554 707		CLAMP	2	
	400 437		BOLT - (AN3-3A)	2	
	404 526		NUT - (MS21042-3)	2	
-98	67700-404		TUBE ASSEMBLY	1	
-98a	67700-405		TUBE ASSEMBLY	1	

When ordering, always specify Part Number, Description, and Serial Number of Aircraft

2D12 INTENTIONALLY LEFT BLANK

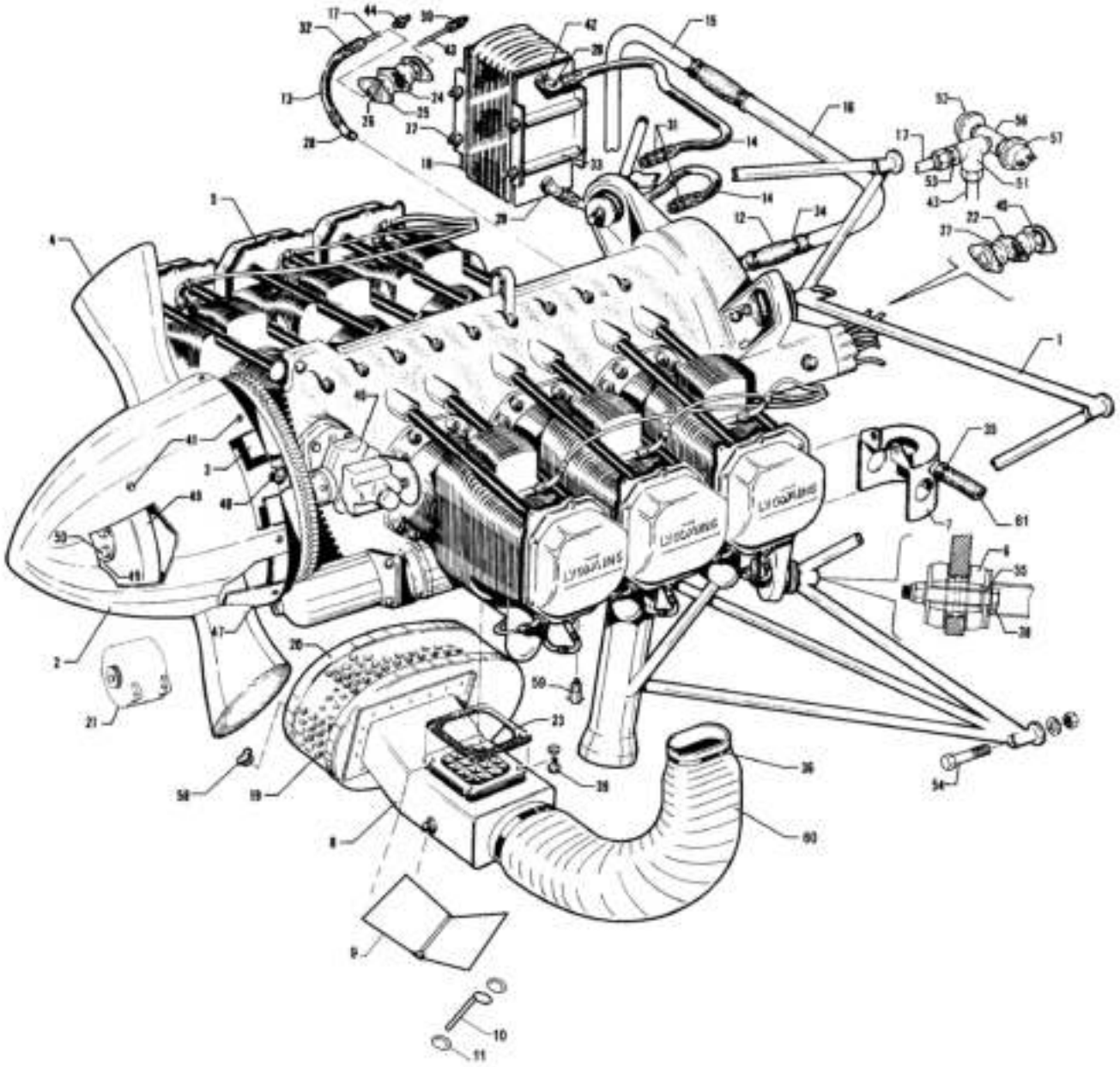

Figure 66. Power Plant Installation
(PA-32-260)

CODE EXPLANATIONS FOR FIGURE 66

A - Secure from Lycoming Division, Avco Corporation, Williamsport, Penna.
B - If less than four mounts are being replaced, ascertain number which is stamped on rubber part of mount and order either 475 114 (J7402 20), or 475 111 (J3804 27). If four mounts are being replaced, it is suggested that Part No. 475 111 (J3804 27) be ordered.
C - Refer to Figures 82 or 83 if Constant Speed Propeller is installed.
D - See Figure 84 for component parts.
E - If existing spinner is constructed of fiberglass, order Spinner Replacement Kit 760 452.
F - Order part for serial Nos. 32-7500040 and up if Lycoming Serial No. on engine includes Suffix A.
G - Used if engine hour meter is installed.
H - Used with fuel pump AC6440295 only.
J - Used with fuel pump AC6441271 only.
K - See Figure 103 for component parts.
L - Reference latest revision to Piper Service Letter 718 pertaining to rework or replacement of the distributor block to accommodate two washers that are installed to improve the lubrication characteristics of the magneto. All Lycoming engines with Bendix S-1200 series magnetos shipped after Feb. 1, 1974, have already been modified and can be identified by the code letter on the magneto nameplate. Also reference latest revision to Piper Service Letter 682, which requires inspection of the piston pin on numerous aircraft engines.
M - Reference latest revision to Piper Service Letter 662, which specifies torque value for the attachment bolts which attach the engine mount to the airframe and provides guidelines for a spacer washer installation which may be used to obtain proper bolt torque and thread engagement.
N - Reference latest revision to Piper Service Bulletin 1022, applicable to PA-32-260 with serial numbers 32-1 to 32-7800008. Induction air filters, Part No. 460 632, may exhibit a condition where the plastisol (black plastic ends) show signs of deterioration, exhibiting cracking, splitting and crumbling.

PIPER PARTS CATALOG

Figure and Index Number	Part Number	Code	NOMENCLATURE	No. Req.	SERIAL NUMBERS AFFECTED
66-	68700		DRAWING - Power Plant Installation		32-1 to 32-1110 inclusive
	69478		DRAWING - Power Plant Installation		32-1111 and up
-1	68710-00		MOUNT ASSEMBLY - Engine and nose gear strut	1	
-2	63760-00	C	SPINNER ASSEMBLY - Propeller	1	32-1 to 32-344 inclusive
	63760-03	C	SPINNER ASSEMBLY - Propeller	1	32-345 to 32-7200055 incl.
	67790-00	E	SPINNER ASSEMBLY - Propeller	1	32-7300001 and up
-3	65208-02	C	BULKHEAD ASSEMBLY - Spinner, aft	1	32-1 to 32-344 inclusive
	65208-03	C	BULKHEAD ASSEMBLY - Spinner, aft	1	32-345 to 32-7200055 incl.
	67791-00	E	BULKHEAD ASSEMBLY - Spinner, aft	1	32-7300001 and up
-4	450 962	C	PROPELLER - McCauley 1P235/PFA8266	1	32-1 to 32-7200055 incl.
	550 936	D	PROPELLER ASSEMBLY - Hartzell (HC-C2YK-1BF/F8477-2)	1	32-7300001 and up
-5		A,L	ENGINE - Lycoming (0-540-E4B5)	1	
-6	475 114	B,M	MOUNTING KIT - Engine (J7402-20)	4	32-1 to 32-569 inclusive
	475 111	M	MOUNTING KIT - Engine (J3804-27)	4	32-570 and up
-7	63425-00	H	BAFFLE ASSEMBLY - Fuel pump	1	
	25006-06	J	BAFFLE ASSEMBLY - Fuel pump	1	
-8	65402-00		BOX ASSEMBLY - Carburetor air	1	32-1 to 32-450 inclusive
	65402-02		BOX ASSEMBLY - Carburetor air	1	32-451 and up
-9	65142-07		* VALVE ASSEMBLY - Carburetor air box	1	
-10	65142-08		* SHAFT ASSEMBLY - Carburetor air box	1	32-1 to 32-450
	65142-09		* SHAFT ASSEMBLY - Carburetor air box	1	32-451 and up
-11	434-129		* GROMMET - (AN931-5-9)	2	
-12	63913-30		HOSE - Engine breather	2	
-13	63901-27		HOSE ASSEMBLY - Oil pressure	1	
-14	63901-26		HOSE ASSEMBLY - Oil cooler	2	
-15	65221-02		TUBE - Engine breather	1	
-16	68735-00		TUBE - Engine breather	1	
-17	68777-00		TUBE ASSEMBLY - Oil pressure gauge (48”)	1	32-1 to 32-1110 inclusive
	67700-45		TUBE ASSEMBLY - Oil pressure gauge (26”)	1	32-1111 to 32-7400061 incl.
	67700-82		TUBE ASSEMBLY - Oil pressure gauge (21”)	1	32-7500001 and up
-18	455 112		OIL COOLER - (Stewart Warner 8406F)	1	32-1 to 32-1033 inclusive
	18622-00		OIL COOLER - (Harrison)	1	32-1 to 32-1033 inclusive
	16599-00		OIL COOLER - (Harrison)	1	32-1034 and up
-19	460 632	N	AIR FILTER - (CA-161PL)	1	
-20	65403-00		COVER ASSEMBLY - Air filter	1	
-21		K	ALTERNATOR INSTALLATION - Chrysler		
-22	68771-03		GASKET - Firewall seal	1	32-1 to 32-1110 inclusive
-23	63684-04		GASKET - Carburetor air box	1	
-24	68771-06	C	GASKET - Firewall seal	1	32-1 to 32-7200055 incl.
	68771-08		GASKET - Firewall seal	1	32-7300001 and up
-25	66789-00		PLATE - Firewall seal grommet	2	
-26	68770-18	C	GROMMET - Firewall seal	2	32-1 to 32-7200055 incl.
	68770-06		GROMMET - Firewall seal	2	32-7300001 and up
-27	68770-03		GROMMET - Firewall seal	2	32-1 to 32-1110 inclusive
-28	68778-00		ELBOW - Oil pressure	1	
-29	558 908		ELBOW - (RA2000-C-8) Used with Stewart Warner Cooler	2	
	458 898		ELBOW - (AN822-8D) Used with Harrison Cooler	2	
-30	484 349		REDUCER - (AN919-1D)	1	
-31	476 664		NIPPLE - (AN816-8D)	2	
-32	491 055		UNION - (AN815-4)	1	
-33	86062-94		SPACER - Oil cooler	4	
-34	454 803		CLAMP - (S-1-3800)	2	
-35	454 837		CLAMP - (H-78000)	2	
-36	99289-00		CLAMP - Air duct	2	

When ordering, always specify Part Number, Description, and Serial Number of Aircraft

PIPER PARTS CATALOG

Figure and Index Number	Part Number	Code	NOMENCLATURE	No. Req.	SERIAL NUMBERS AFFECTED
66-37	400 464		BOLT - (AN3-41A)	4	
	407 564		WASHER - (AN960-10)	8	
	407 584		WASHER - (AN960-10L)	8	
	404 887		NUT - (MS20365-1032C)	4	
-38	401 520	M	BOLT - (AN7-26A)	4	
	407 568		WASHER - (AN960-716)	8	
	407 567	M	WASHER - (AN960-616) (Use 3 each per attachment bolt)	12	
	404 891		NUT - (MS20365-720C)	4	
-39	401 918		BOLT - (AN74A-3)	4	
	407 136		LOCKWASHER - (AN936A416)	4	
-40	401 310		BOLT - (AN4-10A)	12	
	407 585		WASHER - (AN960-4126L)	12	
	404 888		NUT - (MS20365-428C)	12	
-41	416 329	C	SCREW - (AN525-1032R9) Spinner	10	32-1 to 32-344 inclusive
	407 584	C	WASHER - (AN960-10L)	10	32-1 to 32-344 inclusive
	400 438	C	BOLT - (AN3-4A) Spinner	12	32-345 to 32-7200055 incl.
	415 379	E	SCREW - (MS51958-63)	28	32-7300001 and up
	494 227	E	WASHER - Fiber (PS10063-2)	28	32-7300001 and up
-42	477 718		NUT - Oil cooler (Truseal)	1	32-951 to 32-7200011 incl.
-43	67700-44		TUBE ASSEMBLY - Oil pressure gauge (62”)	1	32-1111 to 32-7400061 incl.
	67700-81		TUBE ASSEMBLY - Oil pressure gauge (50”)	1	32-7500001 and up
-44	491 050		UNION - (AN815-4D)	1	32-1111 to 32-7400061 incl.
-45	66789-00		PLATE - Firewall seal grommet	2	32-1 to 32-1110 inclusive
-46	66634-03	F	GOVERNOR - Propeller	1	32-7300001 to 32-7500039 incl.
	66634-09		GOVERNOR - Propeller	1	32-7500040 and up
-47	67794-00	E	CUFF - Spinner	2	32-7300001 and up
-48	67793-00	E	BULKHEAD - Spinner, forward	1	32-7300001 and up
	67793-03		BULKHEAD - Spinner, forward	1	32-1 to 32-7800008 inclusive
-49	99499-00	E	PLATE - Spinner	1	32-7300001 and up
-50	401 301	E	BOLT - (AN4H3A)	4	32-7300001 and up
	407 565	E	WASHER - (AN960-416)	8	32-7300001 and up
-51	79038-00		TEE - Bulkhead fitting	1	32-7500001 and up
-52	587 961		SWITCH - Oil pressure (M-4011-35)	1	32-7500001 and up
-53	477 629		NUT - (AN924-4)	1	32-7500001 and up
	407 591		WASHER - (AN960-716L)	1	32-7500001 and up
-54	401 405		BOLT - (AN6-25A)	5	
	407 567		WASHER - (AN960-616)	AR	
	404 890		NUT - (MS20365-624C)	5	
-55	407 568		WASHER - (AN960-716)	4	32-570 and up
-56	588 469	G	TEE - (1/8 MMS-S)	1	32-7600001 and up
-57	587 990	G	SWITCH - Pressure (M-4006-4)	1	32-7600001 and up
-58	477 668		WING NUT - (WC-02)	2	
-59	61879-02		VALVE ASSEMBLY - Oil drain	1	
-60	99944-04		HOSE - Carburetor heat	1	
-61	63633-20		HOSE - Fuel pump air blast	1	

When ordering, always specify Part Number, Description, and Serial Number of Aircraft

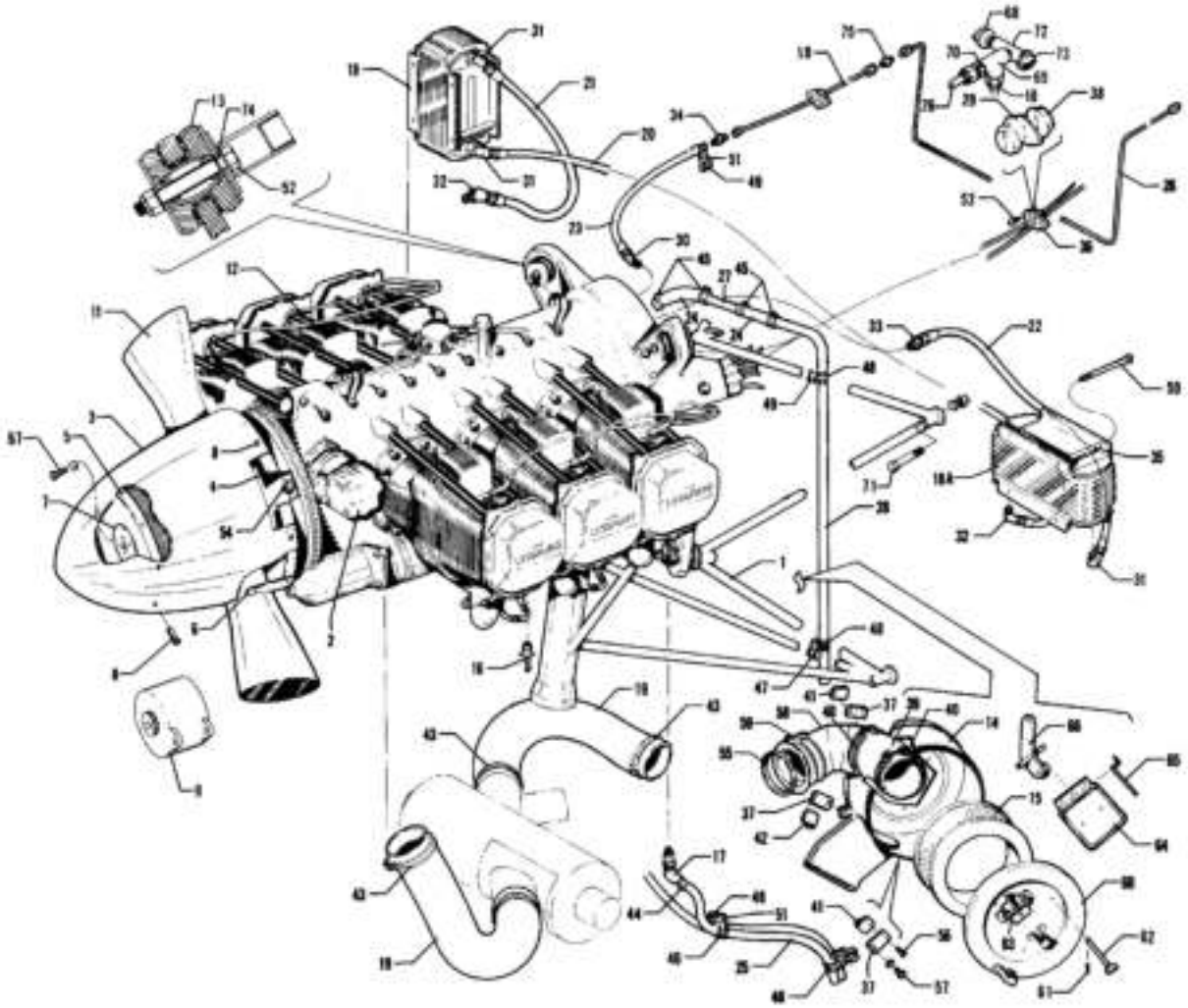

Figure 67 Power Plant Installation
(Serial Nos. 32-40000 to 32-7540198 inclusive)

CODE EXPLANATIONS FOR FIGURE 67

A - Secure from Lycoming, Division-Avco Corporation, Williamsport, Penna.
B - If existing spinner is constructed of fiberglass, order Spinner Replacement Kit 760 452.
C - See Figure 84 for component parts.
D - Order part for serial No. 32-7540139 and up if Lycoming Serial No. on engine includes Suffix “A.”
E - If Oil Cooler and Line Replacement Kit 760 984 has been installed, order oil cooler assembly 16599-00.
F - If Oil Cooler and Line Replacement Kit 760 984 has been installed, order hose assembly 63901-35.
G - Used if engine hour meter is installed.
H - If less than four mounts are being replaced, ascertain number which is stamped on rubber part of mount and order either 475 131 (J-3804-31) or 470 644 (J-3804-40).
If four mounts are being replaced, it is suggested that four of part No. 470 644 (J-3804-40) be ordered.
J - See Figure 103 for component parts if a Chrysler alternator is installed. See Figure 42 if a Prestolite alternator, with air conditioning, is installed.
K - Reference latest revision to Piper Service Letter 718 pertaining to rework or replacement of the distributor block to accommodate two washers that are installed to improve the lubrication characteristics of the magneto. All Lycoming engines with Bendix S-1200 series magnetos shipped after Feb. 1, 1974, have already been modified and can be identified by the code letter on the magneto nameplate. Also reference latest revision to Piper Service Letter 682, which requires inspection of the piston pin on numerous engine models and reference latest revision to Piper Service Letter 665, which calls for installation of a new intake valve that incorporates a rotator cap.
L - Reference latest revision to Piper Service Letter 662, which specifies torque value for the attachment bolts which attach the engine mount to the airframe and provides guidelines for a spacer washer installation which may be used to obtain proper bolt torque and thread engagement. Use 3 washers Part No. 407 567 each per attachment bolt.
M - Reference latest revision to Piper Service Bulletin 1134, applicable to PA-32-300 with serial numbers 32-15, 32-21, 32-40000 through 32-40974, 32-714001 through 32-7940290. A number of fuel injection servos have been found to seep fuel from the metered fuel pressure port, due to scoring caused by a damaged test fitting.

PIPER PARTS CATALOG

Figure and Index Number	Part Number	Code	NOMENCLATURE	No. Req.	SERIAL NUMBERS AFFECTED
67-	68383		DRAWING - Power Plant Installation		32-40000 to 32-40565 incl.
	99479		DRAWING - Power Plant Installation		32-40566 and up
-1	68710-00		MOUNT ASSEMBLY - Engine and nose gear strut	1	
-2	66634-03	D	GOVERNOR - Propeller	1	32-40566 to 32-7540138 incl.
	66634-09		GOVERNOR - Propeller	1	32-7540139 and up
-3	67790-00	B	SPINNER SHELL - Propeller	1	
-4	67791-00	B	BULKHEAD ASSEMBLY - Spinner aft	1	
-5	67793-00	B	BULKHEAD ASSEMBLY - Spinner forward	1	
	67793-03	B	BULKHEAD ASSEMBLY - Spinner forward	1	
-6	67794-00	B	CUFF - Spinner	2	
-7	99499-00	B	PLATE - Spinner	1	
-8	415 379	B	SCREW - (MS51958-63)	28	
	494 227	B	WASHER - Fiber (PS10063-2)	28	
-9		J	ALTERNATOR INSTALLATION		
-10	67700-44		TUBE ASSEMBLY - Oil pressure gauge (62)	1	32-40000 to 32-7440182 incl.
	67700-81		TUBE ASSEMBLY - Oil pressure gauge (50)	1	32-7540001 and up
-11	550 937	C	PROPELLER ASSEMBLY-Hartzell (HC-C2YK-1BF/F8475D-4)	1	
	550 941	C	PROPELLER ASSEMBLY-Hartzell (HC-C2YK-1BF/F8475R-0)	1	
-12		A,K,M	ENGINE ASSEMBLY - Lycoming (IO-540-K1A5)	1	
-13	475 111	K,L	MOUNTING KIT - Engine (J-3804-27)	4	32-40000 to 32-7240055 incl.
	470 644	H,L	MOUNTING KIT - Engine (J-3804-40)	4	32-7240056 and up
-14	68046-00		BOX ASSEMBLY - Engine air filter	1	32-40000 to 32-40565 inclusive
	69459-00		BOX ASSEMBLY - Engine air filter	1	32-40566 and up
-15	460 629		FILTER AIR (CA-162PL)	1	
-16	61879-02		VALVE ASSEMBLY - Oil drain	1	
-17	24995-00		VALVE ASSEMBLY - Automatic fuel drain	3	
-18	16599-00		COOLER ASSEMBLY - Oil (Harrison) right	1	
-18a	760 984	E	KIT - Oil cooler replacement left	1	32-40000 to 32-7540139 incl.
	16599-00		COOLER ASSEMBLY - Oil (Harrison) left	1	32-7540140 and up
-19	63633-41		HOSE - Air duct left	1	
	63633-42		HOSE - Air duct right	1	
-20	63901-35		HOSE ASSEMBLY - Oil cooler	1	
-21	63901-26		HOSE ASSEMBLY - Outlet to oil cooler right	1	
-22	63901-26	F	HOSE ASSEMBLY - Outlet to oil cooler left	1	32-40000 to 32-7540139 incl.
	63901-35		HOSE ASSEMBLY - Outlet to oil cooler left	1	32-7540140 and up
-23	63901-27		HOSE ASSEMBLY - Oil pressure	1	
-24	63913-30		HOSE - Breather tube	2	
-25	69015-02		HOSE - Automatic fuel drain left	2	
	69015-04		HOSE - Automatic fuel drain right	1	
-26	68777-00		TUBE ASSEMBLY - Oil pressure gauge (48)	1	32-40000 to 32-40565 incl.
	67700-45		TUBE ASSEMBLY - Oil pressure gauge (26)	1	32-40566 to 32-7440182 incl.
	67700-82		TUBE ASSEMBLY - Oil pressure gauge (21)	1	32-7540001 and up
-27	69004-00		TUBE - Engine breather	1	
-28	69024-00		TUBE - Engine breather	1	
-29	68771-03		GASKET - Firewall seal	1	32-40000 to 32-40565 incl.
-30	68778-00		ELBOW - Oil pressure (restricted) 45 degrees	1	
-31	458 898		ELBOW - Oil cooler (MS20822-8D) 90 degrees	3	
-32	458 886		ELBOW - Oil cooler (MS20823-8D) 45 degrees	2	
-33	476 664		NIPPLE - Engine breather (AN816-8D)	1	
-34	491 055		UNION - Oil pressure (AN815-4)	1	
-35	86062-94		BUSHING - Spacer	8	
-36	66789-00		PLATE - Firewall seal	2	32-40000 to 32-40565 incl.
-37	69018-00		PLATE - Engine air filter box attachment	3	
-38	68770-03		GROMMET - Firewall seal	2	32-40000 to 32-40565 incl.
-39	99849-08		HOSE - Air duct (5-50 length)	1	
-40	554 883		CLAMP - (SAE TY A 4 1/16)	2	

When ordering, always specify Part Number, Description, and Serial Number of Aircraft

PIPER PARTS CATALOG

Figure and Index Number	Part Number	Code	NOMENCLATURE	No. Req.	SERIAL NUMBERS AFFECTED
67-41	69019-02		CLAMP - Engine air filter box	2	
-42	69019-03		CLAMP - Engine mount	1	
-43	454 993		CLAMP - (SAE TY A-3 1/16)	4	
-44	454 983		CLAMP - (SAE 8) Type “E”	3	
-45	554 701		CLAMP - (SAE TY F-16)	4	
-46	554 881		CLAMP - (PS10017-6-5)	2	
-47	454 868		CLAMP - (PS10017-2-12)	1	
-48	454 977		CLAMP - (PS10017-2-16)	2	
-49	454 935		CLAMP - (PS10017-2-10)	3	
-50	400 464		BOLT - (AN3-41A)	8	
	407 564		WASHER - (AN960-10)	16	
	407 584		WASHER - (AN960-10L)	16	
	404 887		NUT - (MS20365-1032C)	8	
-51	417 776		SCREW - (AN520-10R10)	4	
	404 887		NUT - (MS20365-1032C)	4	
-52	401 520	L	BOLT - (AN7-26A)	4	32-40000 to 32-7240055 incl.
	401 521	L	BOLT - (AN7-27A)	4	32-7240056 and up
	407 568		WASHER - (AN960-716)	8	
	407 567	L	WASHER - (AN960-616)	12	
	404 891		NUT - (MS20365-720C)	4	
-53	415 754		SCREW - (AN515-8R8)	2	32-40000 to 32-40565 inclusive
	404 910		NUT - (MS20365-832C)	2	32-40000 to 32-40565 inclusive
-54	401 310		BOLT - (AN4-10A)	12	
	407 585		WASHER - (AN960-416L)	12	
	404 888		NUT - (MS20365-428C)	12	
-55	69231-00		SPACER - Air duct	1	
-56	415 754		SCREW - (AN515-8R8)	6	
	407 563		WASHER - (AN960-8)	6	
	404 910		NUT - (MS20365-832C)	6	
-57	400 438		BOLT - (AN3-4A)	3	
	407 564		WASHER - (AN960-10)	6	
	404 887		NUT - (MS20365-1032C)	3	
-58	69232-00		ELBOW ASSEMBLY - Engine air filter	1	
-59	69017-02		CLAMP ASSEMBLY	1	
-60	68047-00		COVER ASSEMBLY - Engine air filter	1	32-40000 to 32-40565 inclusive
	69458-00		COVER ASSEMBLY - Engine air filter	1	32-40566 and up
-61	480 650		* PIN - (99785-2)	3	32-40000 to 32-40237 inclusive
-62	487 713		* STUD - (W98293-2.8000)	2	32-40000 to 32-40237 inclusive
	487 727		* STUD - (2600-91W)	3	32-40238 and up
-63	401 279		* BOLT - (AN3-025A)	1	
	407 564		* WASHER - (AN960-10)	1	
	404 887		* NUT - (MS20365-1032C)	1	
	63900-96		* BUSHING	1	
-64	23809-07		* DOOR ASSEMBLY - Engine air filter cover	1	
-65	24582-00		* * SPRING - Air filter cover	1	
-66	69074-00		* LEVER ASSEMBLY - Engine air filter cover	1	
-67	401 301		BOLT - (AN4H3A)	4	
	407 565		WASHER - (AN960-416)	8	
-68	587 961		SWITCH - Oil pressure (M-0411-35)	1	32-7540001 and up
-69	79038-00		TEE - Bulkhead fitting	1	32-7540001 and up
-70	407 591		WASHER - (AN960-716L)	1	32-7540001 and up
	477 629		NUT - (AN924-4)	1	32-7540001 and up
-71	401 405		BOLT - (AN6-25A)	5	
	407 567		WASHER - (AN960-616)	AR	
	404 890		NUT - (MS20365-624C)	5	
-72	588 469	G	TEE - (1/3 MMS-S)	1	32-7640001 and up
-73	587 990	G	SWITCH - (M-4006-4)	1	32-7640001 and up
-74	407 568		WASHER - (AN960-716)	4	32-40000 to 32-7240055 incl.
-75	491 050		UNION - (AN815-4D)	1	32-40566 to 32-7440182 incl.

When ordering, always specify Part Number, Description, and Serial Number of Aircraft

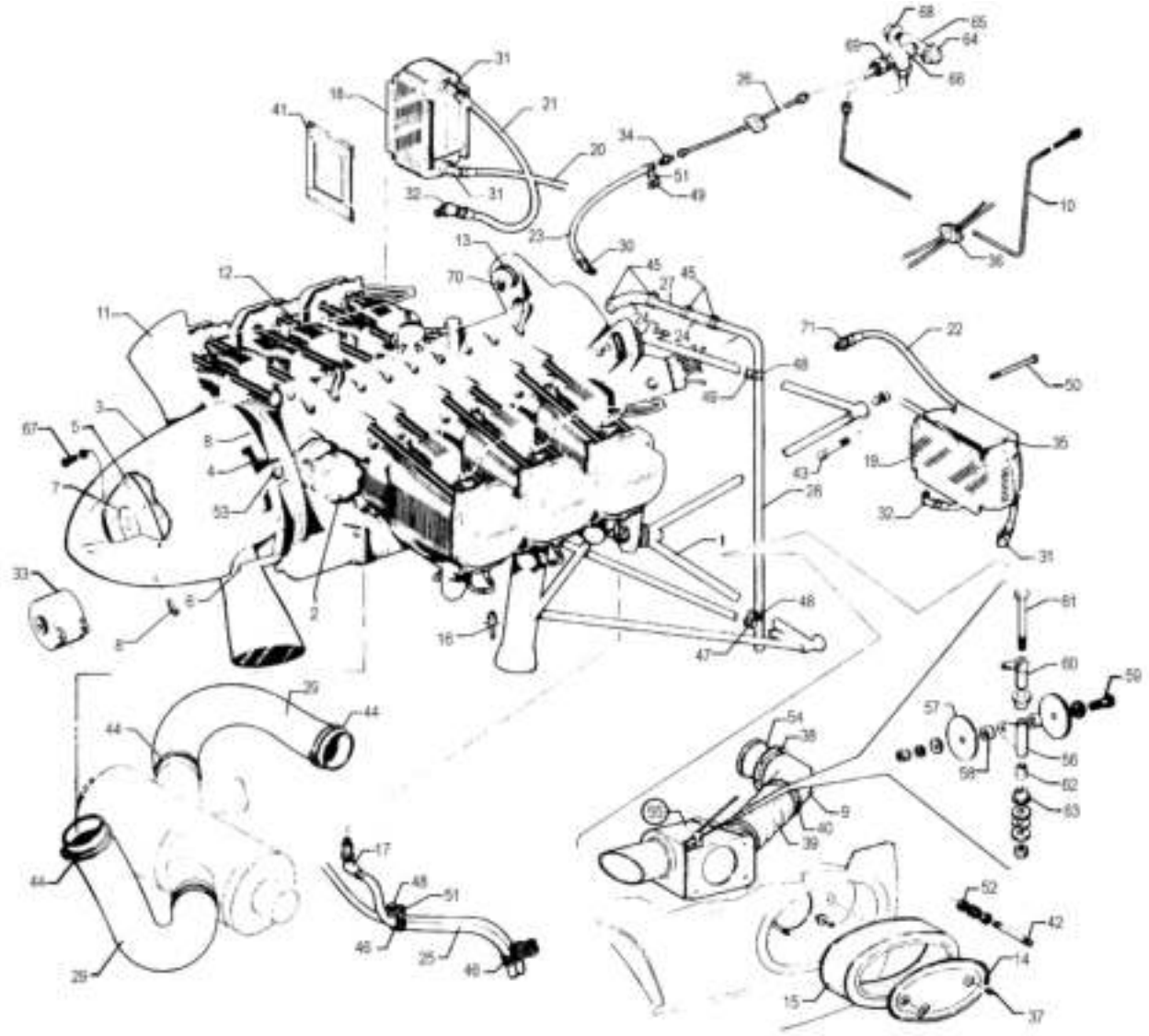

Figure 67A Power Plant Installation
(Serial Nos. 32-7640001 and up)

CODE EXPLANATIONS FOR FIGURE 67A

A - Secure from Lycoming, Division-Avco Corporation, Williamsport, Penna.
B - See Figure 84 for component parts
C - Used if engine hour meter is installed.
D - See Figure 122 if Radar System is installed.
E - If less than four mounts are being replaced, ascertain number which is stamped on rubber part of mount and order either 475 131 (J-3804-31) or 470 644 (J-3804-40). If four mounts are being replaced, it is suggested that four of part number 470 644 (J-3804-40) be ordered.
F - See Figure 103 for component parts if a Chrysler Alternator is installed. See Figure 42 if a Prestolite alternator, with air conditioning, is installed.
G - Reference latest revision to Piper Service Letter 837. The elbow assembly connecting the air filter to the fuel injector servo may become loose.
H - Reference latest revision to Piper Service Letter 718 pertaining to rework or replacement of the distributor block to accommodate two washers that are installed to improve the lubrication characteristics of the magneto. All Lycoming engines with Bendix S-1200 series magnetos shipped after Feb. 1, 1974, have already been modified and can be identified by the code letter on the magneto nameplate. Also reference latest revision to Piper Service Letter 682, which requires inspection of the piston pin on numerous engine models and reference latest revision to Piper Service Letter 665, which calls for installation of a new intake valve that incorporates a rotator cap.
J - Reference latest revision to Piper Service Bulletin 1134, applicable to PA-32-300 with serial numbers 32-15, 32-21, 32-40000 through 32-40974, 32-714001 through 32-7940290. A number of fuel injection servos have been found to seep fuel from the metered fuel pressure port, due to scoring caused by a damaged test fitting.
K - Reference latest revision to Piper Service Bulletin 1022, applicable to PA-32-300 with serial numbers 32-7640001 to 32-7940290. Induction air filters, Part No. 460 632, may exhibit a condition where the plastisol (black plastic ends) show signs of deterioration, exhibiting cracking, splitting and crumbling.

PIPER PARTS CATALOG

Figure and Index Number	Part Number	Code	NOMENCLATURE	No. Req.	SERIAL NUMBERS AFFECTED
67A-	69479		DRAWING - Power Plant Installation		
-1	68710-00		MOUNT ASSEMBLY - Engine and nose gear strut	1	
-2	66634-09		GOVERNOR - Propeller	1	
-3	67790-00		SPINNER SHELL - Propeller	1	
-4	67791-00		BULKHEAD ASSEMBLY - Spinner aft	1	
-5	67793-00		BULKHEAD ASSEMBLY - Spinner forward	1	
	67793-03		BULKHEAD ASSEMBLY - Spinner forward	1	
-6	67794-00		CUFF - Spinner	2	
-7	99499-00		PLATE - Spinner	1	
-8	415 379		SCREW - (MS51958-63)	28	
	494 227		WASHER - Fiber (PS10063-2)	28	
-9	69232-00	G	ELBOW ASSEMBLY - Engine air filter	1	
-10	67700-81		TUBE ASSEMBLY - Oil pressure gauge (50)	1	
-11	550 937	B	PROPELLER ASSEMBLY-Hartzell (HC-C2YK-1BF/F8475D-4)	1	
	550 941	B	PROPELLER ASSEMBLY-Hartzell (HC-C2YK-1BF/F8475R-0)	1	
-12		A,H,J	ENGINE ASSEMBLY - Lycoming (IO-540-K1A5)	1	32-7640001 to 32-7640065 incl. 32-7640067 to 32-7640071 incl.
		A,H,J	ENGINE ASSEMBLY - Lycoming (IO-540-K1G5)	1	32-7640066, 32-7640072 and up
-13	475 131	E	MOUNTING KIT - Engine (J-3804-31)	4	
-14	38019-05		CAP - Air filter	1	
-15	460 632	K	FILTER - Air (CA161PL)	1	
-16	61879-02		VALVE ASSEMBLY - Oil drain	1	
-17	24995-00		VALVE ASSEMBLY - Automatic fuel drain	3	
-18	16599-00		COOLER ASSEMBLY - Oil (Harrison) right	1	
-19	16599-00		COOLER ASSEMBLY - Oil (Harrison) left	1	
-20	63901-73		HOSE ASSEMBLY - Oil cooler	1	
-21	63901-26		HOSE ASSEMBLY - Outlet to oil cooler right	1	
-22	63901-35		HOSE ASSEMBLY - Outlet to oil cooler left	1	
-23	63901-27		HOSE ASSEMBLY - Oil pressure	1	
-24	63913-30		HOSE - Breather tube	2	
-25	69015-02		HOSE - Automatic fuel drain left	2	
	69015-04		HOSE - Automatic fuel drain right	1	
-26	67700-82		TUBE ASSEMBLY - Oil pressure gauge (21)	1	
-27	69004-00		TUBE - Engine breather	1	
-28	69024-00		TUBE - Engine breather	1	
-29	63633-159		HOSE - Air duct left	1	
	63633-158		HOSE - Air duct right	1	
-30	68778-00		ELBOW - Oil pressure (restricted) 45 degrees	1	
-31	458 898		ELBOW - Oil cooler (MS20822-8D) 90 degrees	3	
-32	458 886		ELBOW - Oil cooler (MS20823-8D) 45 degrees	2	
-33		F	ALTERNATOR INSTALLATION	1	
-34	491 055		UNION - Oil pressure (AN815-4)	1	
-35	86062-94		BUSHING - Spacer	8	
-36	66789-00		PLATE - Firewall seal	2	
-37	407 584		WASHER - (AN960-10L)	2	
	407 104		WASHER - Lock (AN935-10)	2	
	477 668		WING NUT - (WC-02)	2	
-38	555 846		CLAMP - (PS10017-23-60)	1	
-39	99849-08		HOSE - Air duct (5 50 length)	1	
-40	554 883		CLAMP - (SAE TY A 4 1/16)	2	
-41	38155-00		SEAL ASSEMBLY - Oil cooler	2	
-42	38019-03		STUD	2	
-43	401 405		BOLT - (AN6-25A)	5	
	407 567		WASHER - (AN960-616)	AR	
	404 890		NUT - (MS20365-624C)	5	
-44	454 993		CLAMP - (SAE TY A 3 1/16)	4	
-45	554 701		CLAMP - (SAE TY F 16)	4	

When ordering, always specify Part Number, Description, and Serial Number of Aircraft

PIPER PARTS CATALOG

Figure and Index Number	Part Number	Code	NOMENCLATURE	No. Req.	SERIAL NUMBERS AFFECTED
67A-46	554 881		CLAMP - (PS10017-6-5)	2	
-47	454 868		CLAMP - (PS10017-2-12)	1	
-48	454 977		CLAMP - (PS10017-2-16)	2	
-49	454 935		CLAMP - (PS10017-2-10)	3	
-50	400 464		BOLT - (AN3-41A)	8	
	407 564		WASHER - (AN960-10)	16	
	407 584		WASHER - (AN960-10L)	16	
	404 887		NUT - (MS20365-1032C)	8	
-51	417 776		SCREW - (AN520-10R10)	4	
	404 887		NUT - (MS20365-1032C)	4	
-52	407 800		WASHER - (AN970-3)	4	
	404 887		NUT - (MS20365-1032C)	2	
	404 224		NUT - (AN315-3R)	2	
-53	401 310		BOLT - (AN4-10A)	12	
	407 585		WASHER - (AN960-416L)	12	
	404 888		NUT - (MS20365-428C)	12	
-54	69231-00	G	SPACER - Air duct	1	
-55	38080-00		VALVE BOX ASSEMBLY - Induction air	1	
-56	38080-09		* ARM ASSEMBLY	1	
-57	38080-24		* VALVE DISC	2	
-58	38080-15		* SPACER	2	
-59	401 269		* BOLT - (AN3-10A)	1	
	62833-07		* WASHER	2	
	407 043		* WASHER - Spring (MS35338-43)	1	
	404 887		* NUT - (MS20365-1032C)	1	
-60	38080-12		* CONTROL ASSEMBLY	1	
-61	401 343		* BOLT - (AN4-53)	1	
	407 591		* WASHER - (AN960-716L)	1	
	62833-86		* WASHER	1	
	404 101		* NUT - (AN310-4)	1	
	424 052		* COTTER PIN - (MS24665-134)	1	
-62	38080-17		* BUSHING	1	
-63	452 619		* BEARING - (MS17796-58)	2	
-64	587 990	C	SWITCH - (M-4006-4)	1	32-7640001 and up
-65	588 469	C,D	TEE - (1/3 MMS-S)	1	32-7640001 and up
-66	79038-00		TEE - Bulkhead fitting	1	32-7540001 and up
-67	401 301		BOLT - (AN4H3A)	4	
	407 565		WASHER - (AN960-416)	8	
-68	587 961		SWITCH - Oil pressure (M-4011-35)	1	32-7540001 and up
-69	407 591		WASHER - (AN960-716L)	1	32-7540001 and up
	477 629		NUT - (AN924-4)	1	32-7540001 and up
-70	401 521		BOLT - (AN7-27A)	4	
	407 568		WASHER - (AN960-716)	8	
	404 891		NUT - (MS20365-720C)	4	
-71	476 664		NIPPLE - Engine breather (AN816-8D)	1	

When ordering, always specify Part Number, Description, and Serial Number of Aircraft

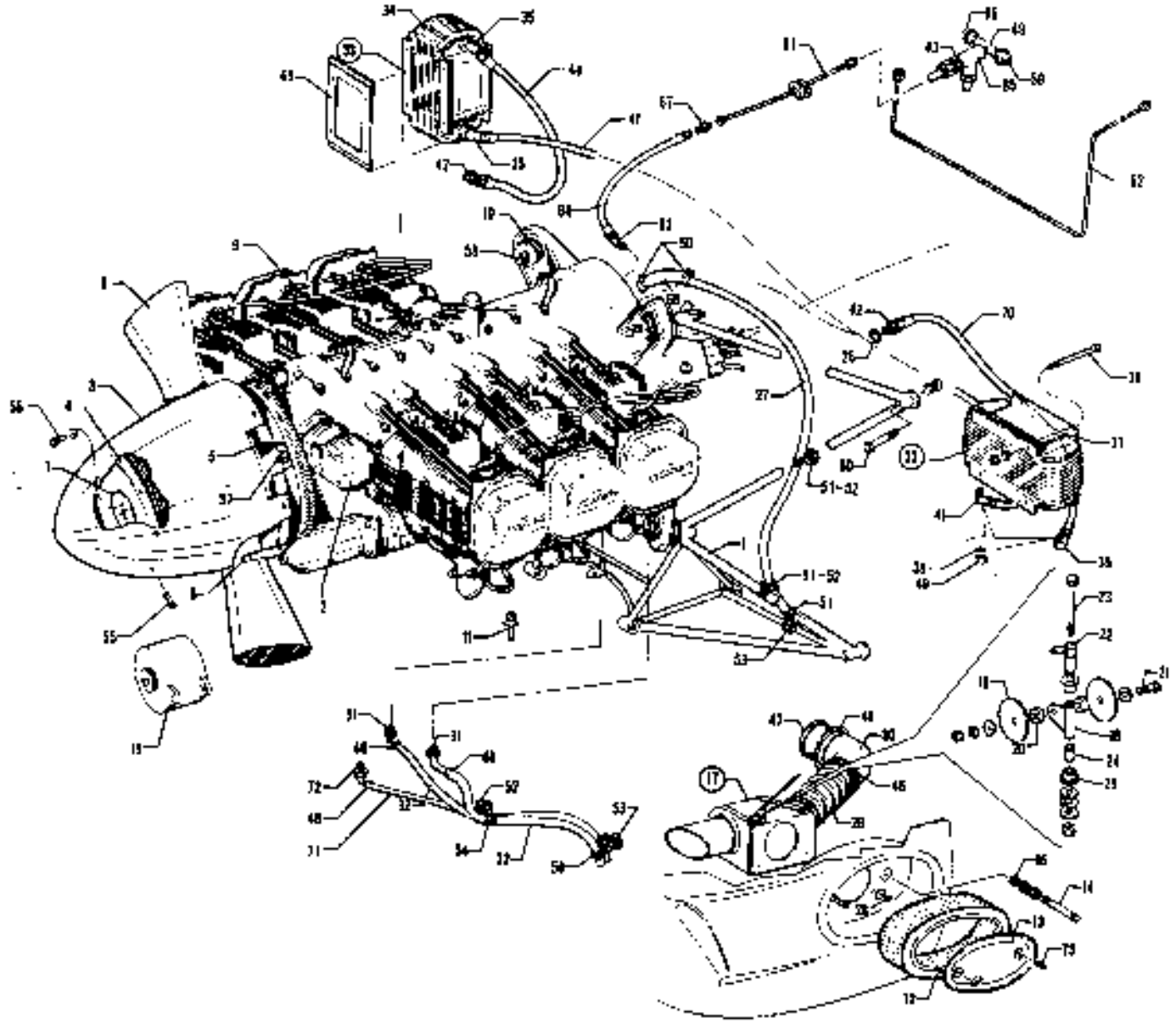

Figure 68 Power Plant Installation
(PA-32R-300)

CODE EXPLANATIONS FOR FIGURE 68

A - See Figure for component parts.
B - Secure from Lycoming Division-Avco Corporation, Williamsport, Penna.
C - Used if engine hour meter is installed.
D - Used on airplanes with serial numbers 32R-7680001 and up if oil cooler replacement kit 763 859 has been installed per Service Bulletin 586B.
E - Used on airplanes with serial numbers 32R-7680001 and up if induction sump drain valve kit 763 887 has been installed per Service Letter 864.
F - If less than four mounts are being replaced, ascertain number which is stamped on rubber part of mount and order either 475 131 (J-3804-31) or 470 644 (J-3804-40). If four mounts are being replaced, it is suggested that four of part number 470 644 (J-3804-40) be ordered.
G - See Figure 103 for component parts if a Chrysler alternator is installed. See Figure 42 if a Prestolite alternator, with air conditioning, is installed.
H - Reference latest revision to Piper Service Letter 837. The elbow assembly connecting the air filter to fuel injector servo may become loose.
J - Reference latest revision to Piper Service Letter 718 pertaining to rework or replacement of the distributor block to accommodate two washers that are installed to improve the lubrication characteristics of the magneto. All Lycoming engines with Bendix S-1200 series magnetos shipped after Feb. 1, 1974, have already been modified and can be identified by the code letter on the magneto nameplate. Also reference latest revision to Piper Service Letter 682, which requires inspection of the piston pin on numerous engine models and reference latest revision to Piper Service Letter 665, which calls for installation of a new intake valve that incorporates a rotator cap.
K - Reference latest revision to Piper Service Bulletin 1134, applicable to PA-32R-300 with serial numbers 32R-7680001 to 32R-7880068. A number of fuel injection servos have been found to seep fuel from the metered fuel pressure port, due to scoring caused by a damaged test fitting.
L - Reference latest revision to Piper Service Bulletin 1022, applicable to PA-32R-300. Induction air filters, Part No. 460 632, may exhibit a condition where the plastisol (black plastic ends) show signs of deterioration, exhibiting cracking, splitting and crumbling.
M - Reference latest revision to Piper Service Bulletin 955, which addresses inspection and repair of the engine mount. Use Engine Mount Drag Link Installation Kit 766 253.

PIPER PARTS CATALOG

Figure and Index Number	Part Number	Code	NOMENCLATURE	No. Req.	SERIAL NUMBERS AFFECTED
68-	38013		DRAWING - Power Plant Installation		
	38164		DRAWING - Propeller Installation		
-1	38020-34	M	MOUNT ASSEMBLY - Engine and nose gear strut	1	32R-7680001 only
	38020-00	M	MOUNT ASSEMBLY - Engine and nose gear strut	1	32R-7680002 and up
-2	66634-08		GOVERNOR - Propeller	1	
-3	67790-00		SPINNER SHELL - Propeller	1	
-4	67793-03		BULKHEAD ASSEMBLY - Spinner, forward	1	
-5	67791-00		BULKHEAD ASSEMBLY - Spinner, aft	1	
	67794-00		CUFF - Spinner	2	
-7	99499-00		PLATE - Spinner	1	
-8	550 937	A	PROPELLER ASSEMBLY - Hartzell (HC-C2YK-1BF/F8475D-4)	1	
-9		B,J,K	ENGINE ASSEMBLY - Lycoming 10-540-K1A5D	1	32R-7680001 to 32R-7680140
		B,J,K	ENGINE ASSEMBLY - Lycoming 10-540-K1G5D	1	32R-7680141 and up
-10	475 131	F	MOUNTING KIT - Engine (J-3804-31)	4	
-11	65824-00		VALVE ASSEMBLY - Oil drain	1	
-12	460 632	L	FILTER - Air (Fram CA161PL)	1	
-13	38019-05		CAP - Air filter	1	
-14	38019-03		STUD	2	
-15	--- ---	G	ALTERNATOR	1	
-16	407 800		WASHER - (AN970-3)	4	
	404 887		NUT - (MS20365-1032C)	2	
	404 224		NUT - (AN315-3R)	2	
-17	38080-00	E	VALVE BOX ASSEMBLY - Induction air	1	
-18	38080-09		* ARM ASSEMBLY	1	
-19	38080-24		* VALVE DISC	2	
-20	38080-15		* SPACER	2	
-21	401 269		* BOLT - (AN3-10A)	1	
	62833-07		* WASHER	2	
	407 043		* WASHER - (Spring (MS35338-43)	1	
	404 887		* NUT - (MS20365-1032C)	1	
-22	38080-12		* CONTROL ASSEMBLY	1	
-23	401 343		* BOLT - (AN4-53)	1	
	407 591		* WASHER - (AN960-716L)	1	
	62833-86		* WASHER	1	
	587 384		* WASHER - Spring (3502-22-00)	1	
	404 101		* NUT - (AN310-4)	1	
	424 052		* COTTER PIN - (MS24665-134)	1	
-24	38080-17		* BUSHING	1	
-25	452 619		* BEARING - (MS17796-58)	2	
-26	479 402		“O” RING - (MS28778-10)	1	
-27	38166-00		TUBE - Oil breather	1	
-28	407 584		WASHER - (AN960-10L)	4	
	416 209		SCREW - (AN502-10-10)	4	
-29	99849-08		HOSE - Air duct, flexible	1	
-30	69232-00	H	ELBOW ASSEMBLY - Engine air filter	1	
-31	24995-00		VALVE ASSEMBLY - Automatic fuel drain, left and right	2	
-32	69015-02		HOSE - Automatic fuel drain, left	1	
	69015-04		HOSE - Automatic fuel drain, right	1	
-33	763 859		KIT - Oil cooler replacement	2	
-34	556 391	D	* COOLER ASSEMBLY - Oil (8543897)	1	
-35	558 779	D	* ELBOW - (5515 x 8)	2	
-36	458 914	D	* ELBOW - (AN837-8D)	1	
-37	86700-07	D	* TUBE - Spacer	4	

When ordering, always specify Part Number, Description, and Serial Number of Aircraft

PIPER PARTS CATALOG

Figure and Index Number	Part Number	Code	NOMENCLATURE	No. Req.	SERIAL NUMBERS AFFECTED
68-38	400 460	D	* BOLT - (AN3-35A)	4	
	407 564	D	* WASHER - (AN960-10)	8	
	407 584	D	* WASHER - (AN960-10L)	8	
	404 887	D	* NUT - (MS20365-1032C)	4	
-39	484 879	D	* “O” RING - (MS28778-8)	2	
-40	477 621	D	* NUT - (AN924-8D)	2	
-41	63901-98		HOSE ASSEMBLY - Oil cooler	1	
-42	79869-02		REDUCER	2	
-43	477 629		NUT - (AN924-4)	1	
	407 591		WASHER - (AN960-716L)	1	
-44	63901-100		HOSE ASSEMBLY - Oil cooler to filter	1	
-45	554 883		CLAMP - SAE TY A-4 1/16)	2	
-46	555 846		CLAMP - (PS10017-23-60)	1	
-47	69231-00	H	SPACER	1	
-48	454 806		CLAMP - (SAE TY E-7)	3	
-49	588 469	C	TEE - (1/8 MMS-S)	1	
-50	554 701		CLAMP - (SAE TY F-16)	2	
-51	554 775		CLAMP - (PS10017-2-15)	3	
-52	454 868		CLAMP - (PS10017-2-12)	3	
-53	454 935		CLAMP - (PS10017-2-10)	2	
-54	554 881		CLAMP - (PS10017-6-5)	4	
-55	415 379		SCREW - (MS51958-63)	28	
	494 227		WASHER - Fiber (PS10063-2)	28	
-56	401 301		BOLT - (AN4H-3A)	4	
	407 565		WASHER - (AN960-416)	AR	
-57	401 310		BOLT - (AN4-10A)	12	
	407 585		WASHER - (AN960-416L)	12	
	401 888		NUT - (MS20365-428C)	12	
-58	401 521		BOLT - (AN7-27A)	4	
	407 568		WASHER - (AN960-716)	8	
	404 891		NUT - (MS20365-720C)	4	
-59	587 990	C	SWITCH - (M-4006-4)	1	
-60	401 406		BOLT - (AN6-26A)	AR	
	690 629		WASHER - (NAS1149F0663P)	5	
	404 563		NUT - (MS21045-6)	5	
-61	67700-82		TUBE ASSEMBLY - Oil pressure gauge	1	
-62	67700-81		TUBE ASSEMBLY - Oil pressure gauge	1	
-63	68778-00		FITTING	1	
-64	63901-52		HOSE ASSEMBLY - Oil pressure	1	
-65	79038-00		FITTING - Bulkhead tee	1	
-66	587 961		SWITCH - Oil pressure (M-4011-35)	1	
-67	491 055		UNION - (AN815-4)	1	
-68	63913-133		HOSE - Oil breather	1	
-69	38155-00		SEAL ASSEMBLY - Oil cooler	2	
-70	63901-99		HOSE ASSEMBLY - Engine to oil cooler	1	
-71	69015-04		HOSE - Automatic fuel drain, center	1	
-72	24995-00		VALVE ASSEMBLY - Automatic fuel drain, center	1	
-73	407 584		WASHER - (AN960-10L)	2	
	407 104		WASHER - Lock (AN935-10)	2	
	477 668		WING NUT - (WC-02)	2	

When ordering, always specify Part Number, Description, and Serial Number of Aircraft

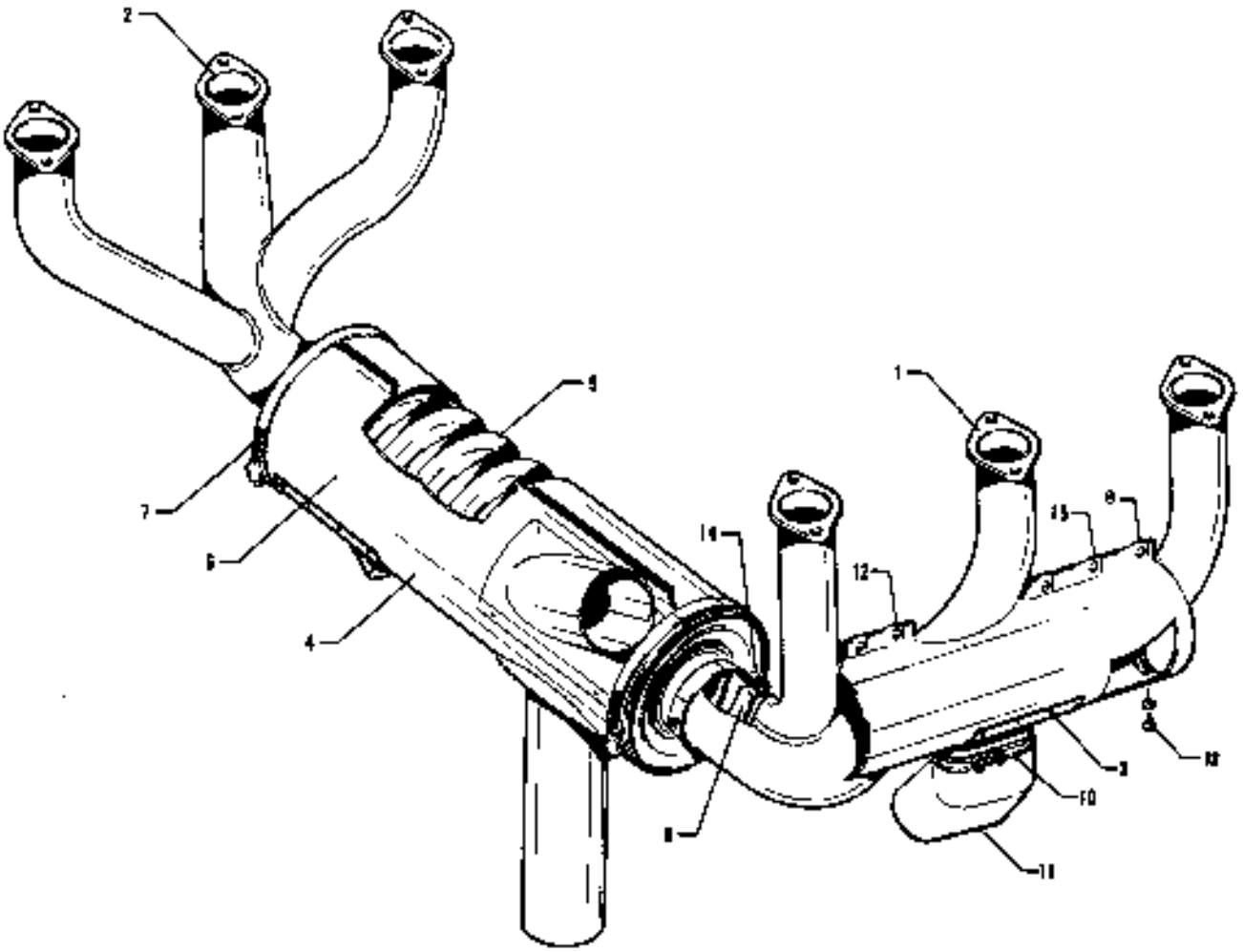

Figure 68. Engine Exhaust System Installation
(PA-32-260)

CODE EXPLANATIONS FOR FIGURE 69

W - These parts must be ordered from Service Spares Department, Piper Aircraft, Lock Haven, Penna.

PIPER PARTS CATALOG

Figure and Index Number	Part Number	Code	NOMENCLATURE	No. Req.	SERIAL NUMBERS AFFECTED
69-	88716		DRAWING - Exhaust System Installation		
-1	65036-00		STACK ASSEMBLY - Left exhaust	1	
-2	88038-00		STACK ASSEMBLY - Right exhaust	1	
-3	65041-00		SHROUD ASSEMBLY - Carburetor heat	1	32-1 to 32-7300008 inclusive
	69875-00		SHROUD ASSEMBLY - Carburetor heat	1	32-7300009 and up
-4	88717-00		MUFFLER ASSEMBLY - Complete	1	32-1 to 32-883 inclusive
	88176-00		MUFFLER ASSEMBLY - Complete	1	32-884 and up
-5	88718-00		MUFFLER ASSEMBLY	1	
-6	88724-00		SHROUD ASSEMBLY - Muffler	1	32-1 to 32-883 inclusive
	69174-00		SHROUD ASSEMBLY - Muffler	1	32-884 and up
-7	564 648	W	CLAMP - (GS9655)	2	
-8	83870-00		CLIP - Shroud	5	
-9	86442-00		CLAMP - Exhaust stack	1	
-10	98269-00		CLAMP - Carburetor heat shroud	1	32-1 to 32-7300008 inclusive
-11	69577-00		TUBE ASSEMBLY - Carburetor heat	1	32-1 to 32-7300008 inclusive
-12	415 146	W	SCREW - (AN526-632R7)	2	
	404 909	W	NUT - (MS20365-632C)	2	
-13	415 146	W	SCREW - (AN526-632R7)	1	
	407 562	W	WASHER - (AN960-8)	1	
	404 909	W	NUT - (MS20365-632C)	1	
-14	400 103	W	BOLT - (AN4-6)	1	
	407 565	W	WASHER - (AN960-416)	2	
	404 101	W	NUT - (AN310-4)	1	
	424 051	W	COTTER PIN - (AN380-2-2)	1	
-15	415 146	W	SCREW - (AN526-632R6)	3	
	404 909	W	NUT - (MS20365-632C)	3	

When ordering, always specify Part Number, Description and Serial Number of Aircraft

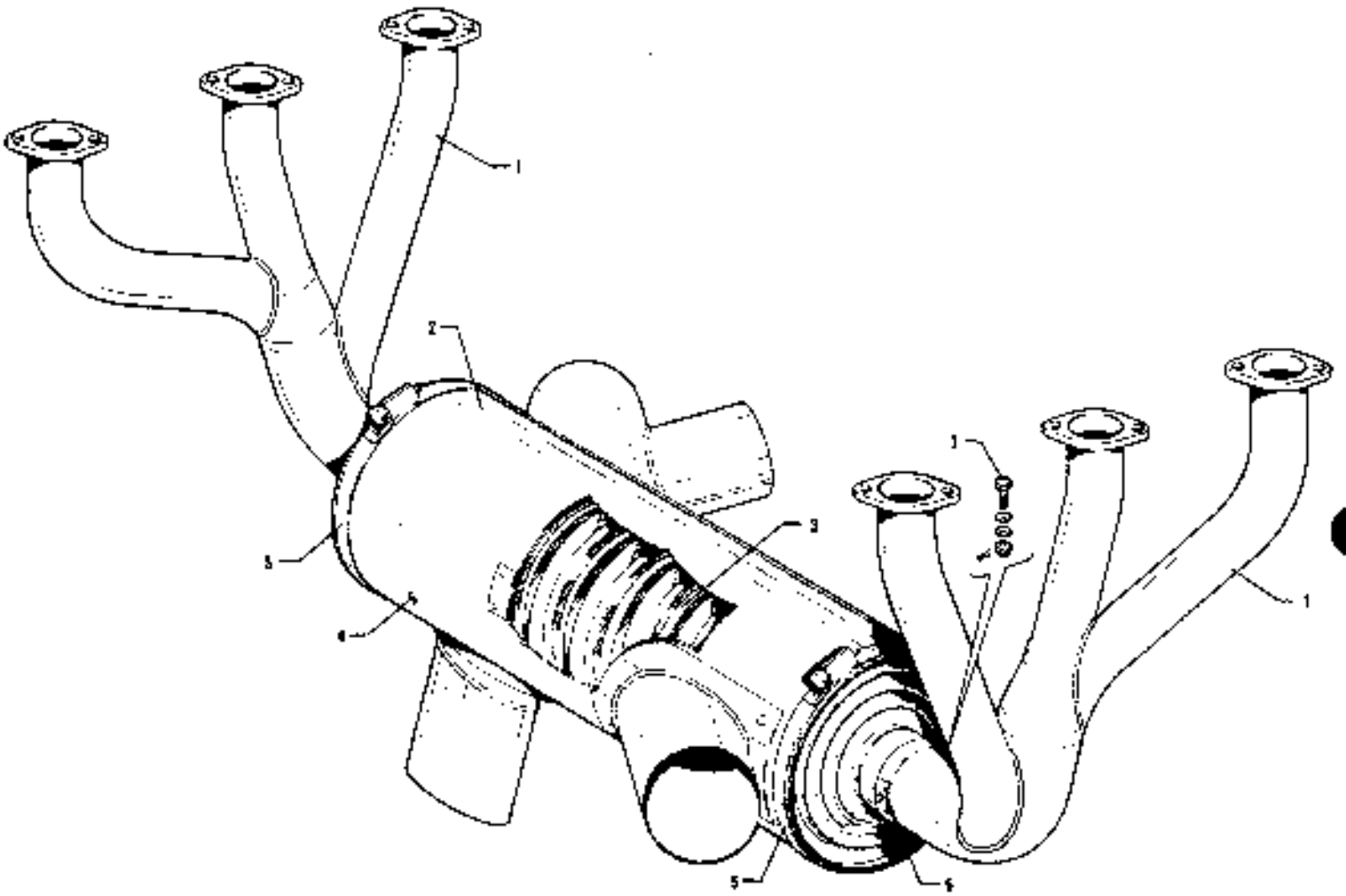

Figure 70. Engine Exhaust System Installation
(Serial Nos. 32-40000 to 32-7540186 inclusive)

CODE EXPLANATIONS FOR FIGURE 70

W - These parts must be ordered from Service Spares Department, Piper Aircraft, Lock Haven, Penna.

PIPER PARTS CATALOG

Figure and Index Number	Part Number	Code	NOMENCLATURE	No. Req.	SERIAL NUMBERS AFFECTED
70-	68805		DRAWING - Exhaust System Installation		
-1	68793-00		STACK ASSEMBLY - Exhaust	2	
-2	68799-00		MUFFLER ASSEMBLY - Complete	1	32-40000 to 32-7240055 inclush
	68799-02		MUFFLER ASSEMBLY - Complete	1	32-7240056 to 32-7640196 incl.
-3	68798-00		MUFFLER ASSEMBLY	1	
-4	68796-00		SHROUD ASSEMBLY	1	32-40000 to 32-7240055 inclush
	68796-03		SHROUD ASSEMBLY	1	32-7240056 to 32-7640196 incl.
-5	564 648	W	CLAMP - (GG-9655)	2	
-6	65442-00		CLAMP - Exhaust stack	1	
-7	400 103	W	BOLT - (AN4-6)	1	
	407 555	W	WASHER - (AN960-416)	2	
	424 051	W	COTTER PIN - (AN380-2-2)	1	
	404 101	W	NUT - (AN310-4)	1	

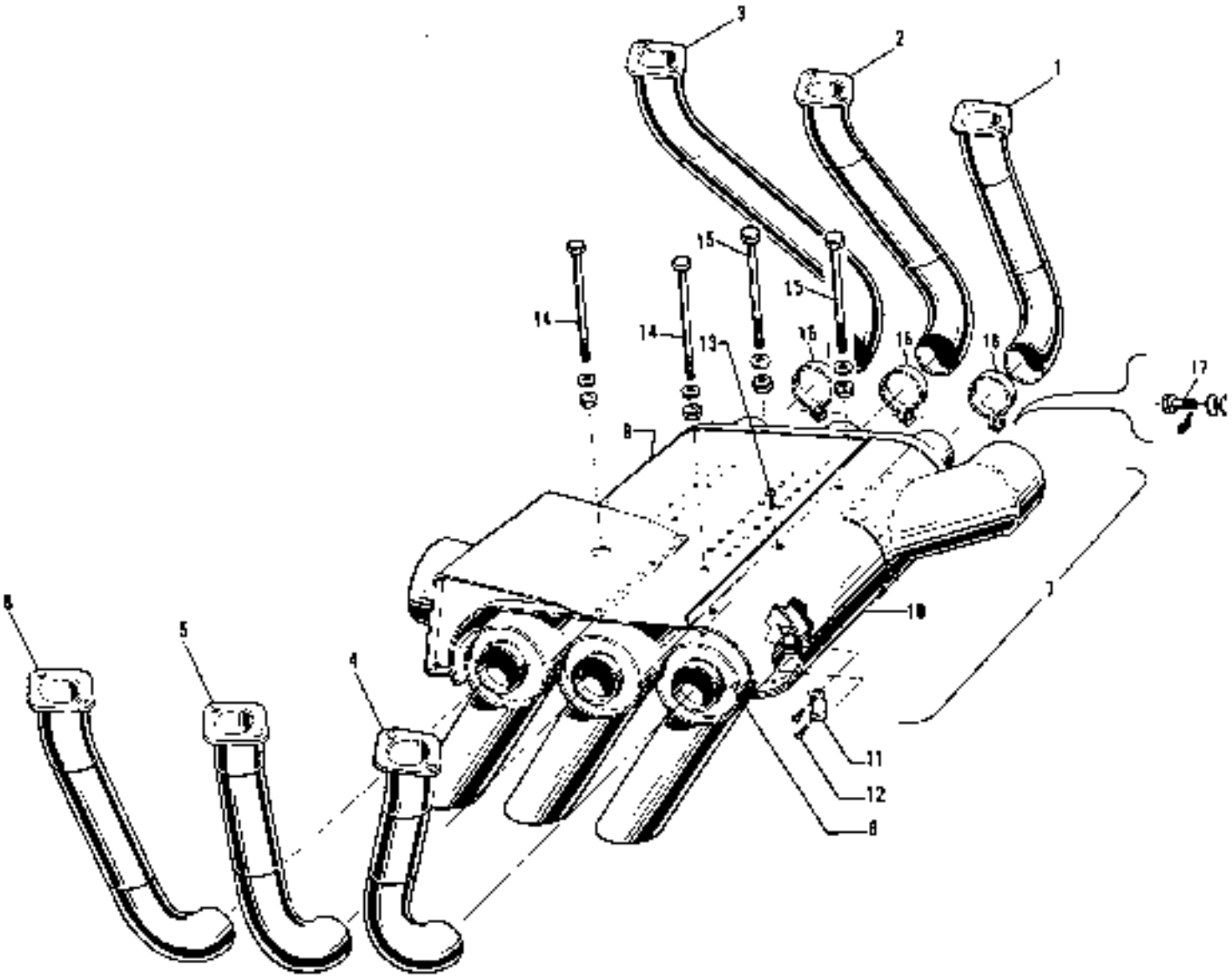

Figure 71. Engine Exhaust System Installation
(PA-32-300 - Serial Nos. 32-7640001 and up)
(PA-32R-300 - Serial Nos. 32R-7680001 and up)

CODE EXPLANATIONS FOR FIGURE 71

A - Used on PA-32-300 with serial numbers 32-7640001 and up, and PA-32R-300.
B - Used on PA-32-300 with serial numbers 32-7640001 to 32-7640059 inclusive, and PA-32R-300 with serial numbers 32R-7680001 to 32R-7680094 inclusive.
C - Used on PA-32-300 with serial numbers 32-7640060 and up, and PA-32R-300 with serial numbers 32R-7680095 and up.
D - Reference latest revision to Piper Service Bulletin 520, applicable to PA-32-300 with serial numbers 32-7640001 to 32-7740002 inclusive and PA-32R-300 with serial numbers 32R-7680001 to 7680511. Inspect to ensure shroud assemblies are properly installed.

PIPER PARTS CATALOG

Figure and Index Number	Part Number	Code	NOMENCLATURE	No. Req.	SERIAL NUMBERS AFFECTED
71-	38137		DRAWING - Exhaust System Installation		
-1	38137-04		STACK ASSEMBLY - Left front	1	
-2	38137-03		STACK ASSEMBLY - Left center	1	
-3	38137-02		STACK ASSEMBLY - Left rear	1	
-4	38137-05		STACK ASSEMBLY - Right front	1	
-5	38137-06		STACK ASSEMBLY - Right center	1	
-6	38137-07		STACK ASSEMBLY - Right rear	1	
-7	38146-00	B	MUFFLER ASSEMBLY - Complete	1	
	38146-02	C	MUFFLER ASSEMBLY - Complete	1	
-8	67517-00		* MUFFLER ASSEMBLY	3	
-9	38159-00	B,D	* SHROUD ASSEMBLY - Muffler top	1	
	38159-02	C	* SHROUD ASSEMBLY - Muffler top	1	
-10	38162-00	D	* SHROUD ASSEMBLY - Muffler bottom	1	
	38162-06	C	* SHROUD ASSEMBLY - Muffler bottom	1	
-11	67652-00		* TAB - Muffler	4	
-12	419 932		* SCREW - (4 x 1/2 Type A)	8	
-13	415 493		* SCREW - (MS35206-228)	7	
-14	400 466		* BOLT - (AN3-43A)	2	
	407 584		* WASHER - (AN960-10L)	4	
	404 835		* NUT - (MS20364-1032C)	2	
-15	400 466	C	* BOLT - (AN3-43A)	2	
	407 584	C	* WASHER - (AN960-10L)	4	
	404 835	C	* NUT - (MS20364-1032C)	2	
-16	63243-02		CLAMP - Exhaust stack	3	
-17	400 103		BOLT - (AN4-6)	3	
	407 565		WASHER - (AN960-416)	6	
	404 101		NUT - (AN310-4)	3	
	424 051		COTTER PIN - (MS24665-132)	3	

When ordering, always specify Part Number, Description, and Serial Number of Aircraft

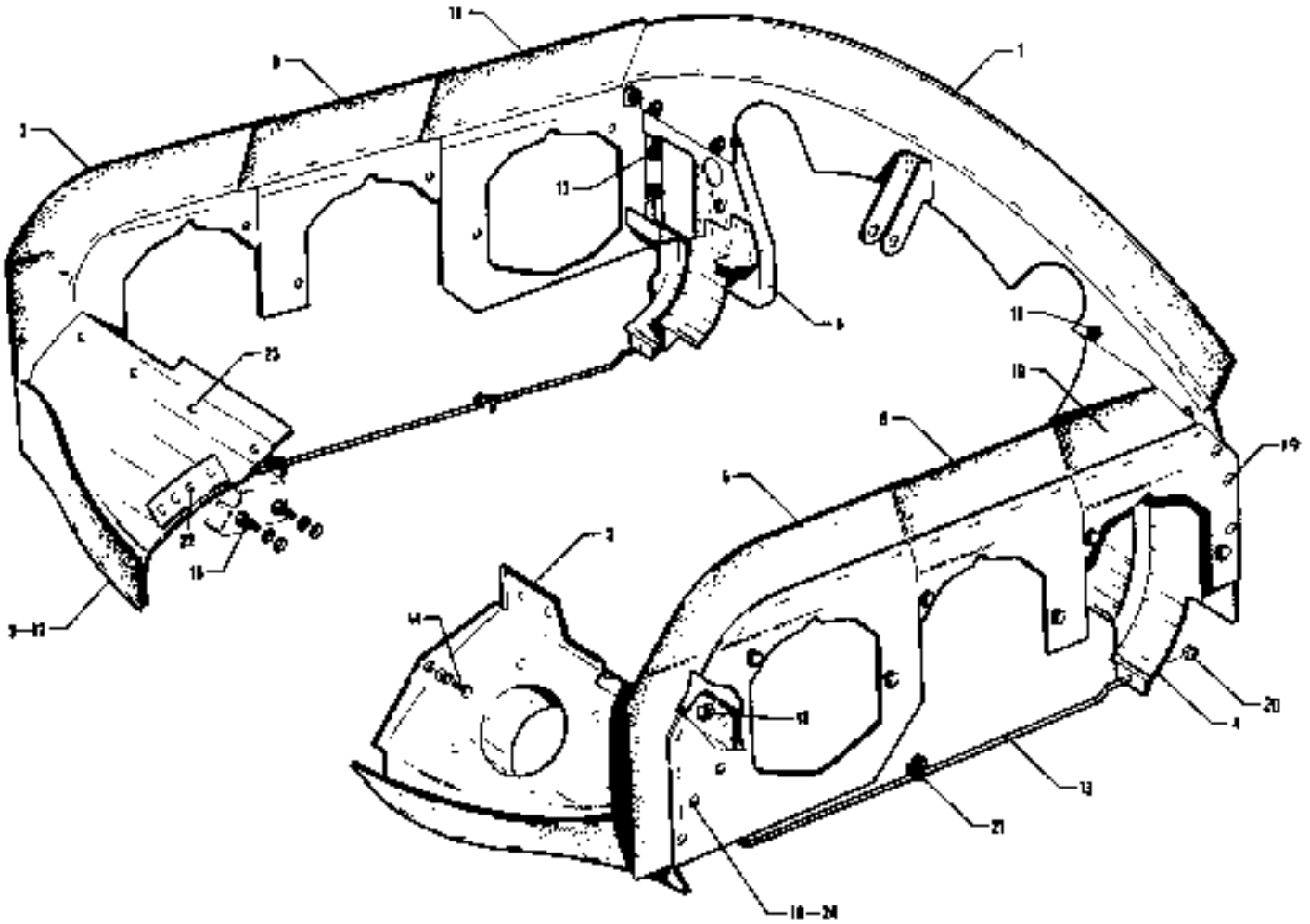

Figure 72. Engine Baffle Installation
(PA-32-260)

CODE EXPLANATIONS FOR FIGURE 72

W - These parts must be ordered from Service Spares Department, Piper Aircraft, Lock Haven, Penna.

PIPER PARTS CATALOG

Figure and Index Number	Part Number	Code	NOMENCLATURE	No. Req.	SERIAL NUMBERS AFFECTED
72-	68745		DRAWING - Engine Baffle Installation		
-1	68746-00		BAFFLE ASSEMBLY - Top rear	1	
-2	68759-00		BAFFLE ASSEMBLY - Left front	1	
-3	66137-00		BAFFLE ASSEMBLY - Right front	1	
-4	65030-00		BAFFLE ASSEMBLY - Left rear	1	
-5	65169-09		BAFFLE ASSEMBLY - Right rear	1	32-1 to 32-1033 inclusive
	69290-00		BAFFLE ASSEMBLY - Right rear	1	32-1034 and up
-6	68748-00		BAFFLE ASSEMBLY - Left side, front	1	
-7	68754-00		BAFFLE ASSEMBLY - Right side, front	1	
-8	68750-00		BAFFLE ASSEMBLY - Left side, center	1	
-9	68766-00		BAFFLE ASSEMBLY - Right side, center	1	
-10	68752-00		BAFFLE ASSEMBLY - Left side, rear	1	
-11	68757-00		BAFFLE ASSEMBLY - Right side, rear	1	
-12	65139-00		FAIRING ASSEMBLY - Right front baffle	1	
-13	65103-02		ROD - Baffle tie	2	
-14	418 420	W	SCREW - Cap (1/4-20NC3 x 1/2)	14	
	407 136	W	WASHER - (AN936-A416)	14	
	407 565	W	WASHER - (AN960-416)	16	
-15	416 983	W	SCREW - (AN526-1024R8)	1	
	407 135	W	WASHER - (AN936-A10)	1	
	407 564	W	WASHER - (AN960-10)	1	
16	418 942		SCREW - Cap (3/8-16NC3 x 3/4)	2	
	407 567	W	WASHER - (AN960-616)	2	
	407 136		WASHER - (AN936-A616)	2	
-17	416 986	W	SCREW - (AN526-1032R8)	9	
	407 564	W	WASHER - (AN960-10)	9	
	404 835	W	NUT - (MS20364-1032C)	8	
-18	416 986	W	SCREW - (AN526-1032R8)	4	
	407 564	W	WASHER - (AN960-10)	4	
	404 887	W	NUT - (MS20365-1032C)	4	
-19	416 448	W	SCREW - (AN526-832R6)	6	
	407 583	W	WASHER - (AN960-8L)	6	
	404 883	W	NUT - (MS20364-832C)	6	
-20	404 829	W	NUT - (MS20364-632C)	4	
-21	417 774		SCREW - (AN520-10R8)	3	
	404 835	W	NUT - (MS20364-1032C)	3	
-22	416 447	W	SCREW - (AN526-832R7)	1	
	477 673		NUT - (MU832-36- 050/ 075-L-F10)	1	
-23	416 447	W	SCREW - (AN526-832R7)	4	
	477 672		NUT - (MU832-36- 025/ 050-L-F10)	4	
-24	416 448	W	SCREW - (AN526-832R8)	2	
	477 672		NUT - (MU832-36- 025/ 050-L-F10)	2	

When ordering, always specify Part Number, Description and Serial Number of Aircraft

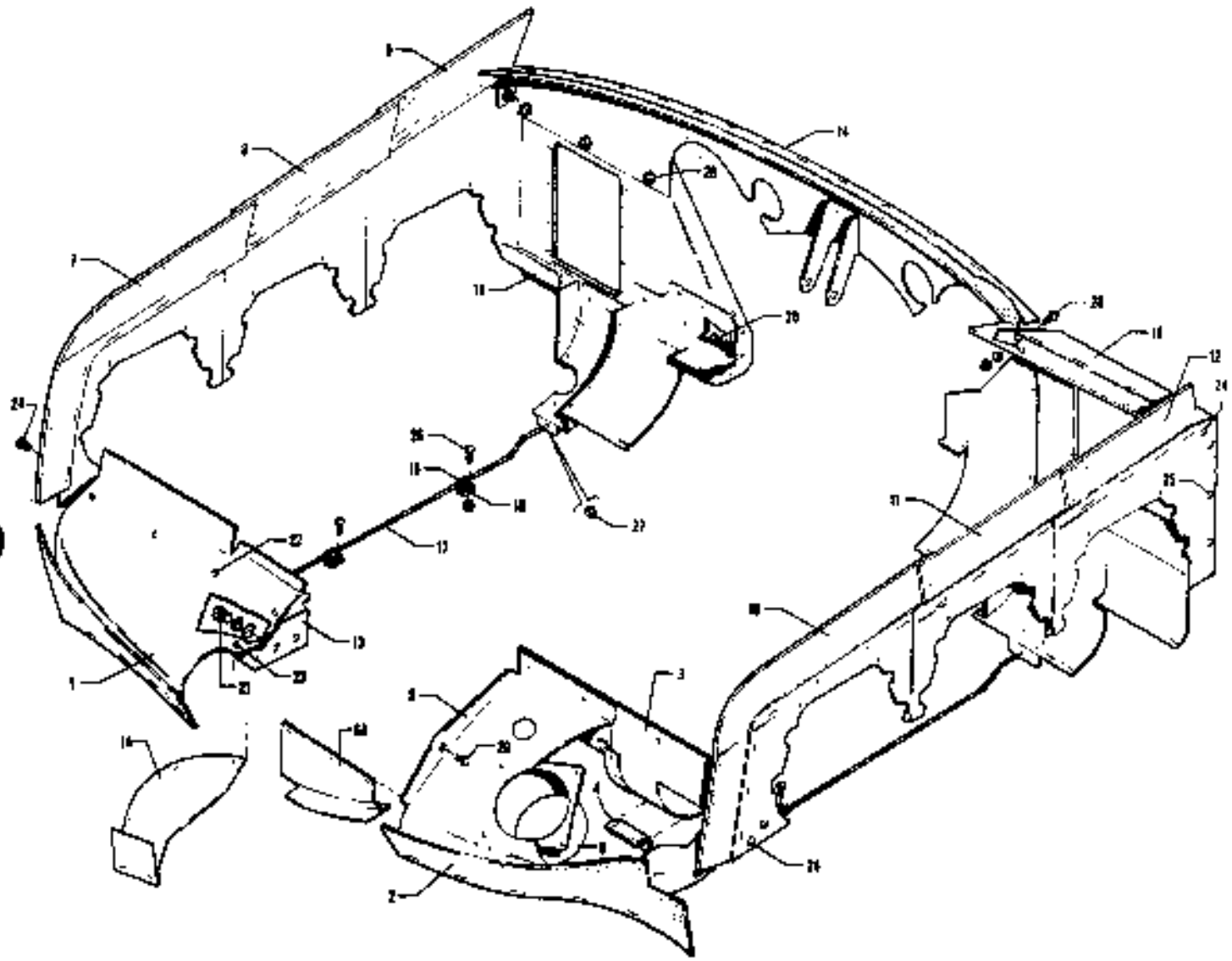

Figure 73. Engine Baffle Installation
(PA-32-300 and PA-32R-300)

CODE EXPLANATIONS FOR FIGURE 73

A - Used on PA-32-300 only.
B - Used on PA-32R-300 only.
C - Used on PA-32-300 with serial numbers 32-7640001 and up, and PA-32R-300.
D - Used on PA-32-300 with serial numbers 32-40000 to 32-7640065 incl., 32-7640067 to 32-7640071 incl., and PA-32R-300 with serial numbers 32R-7680001 to 32R-7680140 incl.
E - Used on PA-32-300 with serial numbers 32-7640066, 32-7640072 and up, and PA-32R-300 with serial numbers 32R-7680141 and up.
W - These parts must be ordered from Service Spare Department, Piper Aircraft, Lock Haven, Penna.

PIPER PARTS CATALOG

Figure and Index Number	Part Number	Code	NOMENCLATURE	No. Req'd	SERIAL NUMBERS AFFECTED
73-	68034		DRAWING - Engine Baffle Installation		
-1	68033-00		FAIRING ASSEMBLY - Right front baffle	1	32-40000 to 32-7240055 incl
	99778-00		FAIRING ASSEMBLY - Right front baffle	1	32-7240056 and up
-1a	99776-00		* COVER ASSEMBLY - Right front baffle	1	32-7240056 and up
-2	68053-00		BAFFLE ASSEMBLY - Engine left front, complete	1	32-40000 to 32-7240055 incl
	99766-00		BAFFLE ASSEMBLY - Engine left front, complete	1	32-7240056 and up
-3	68064-00		* BAFFLE - Left front	1	
-4	65032-00		* CLIP - Baffle	1	
-5	68055-00		* FAIRING - Left front baffle	1	32-40000 to 32-7240055 incl
	99768-00		* FAIRING - Left front baffle	1	32-7240056 and up
-6	65198-00		* TAKE-OFF ASSEMBLY - Left front baffle	1	32-40000 to 32-7240055 incl
	99767-00		* TAKE-OFF ASSEMBLY - Left front baffle	1	32-7240056 and up
-6a	99769-00		* COVER ASSEMBLY - Left front baffle fairing	1	32-7240056 and up
-7	68035-00		BAFFLE ASSEMBLY - Right side front	1	
-8	68034-00		BAFFLE ASSEMBLY - Right side center	1	
-9	68033-00	A	BAFFLE ASSEMBLY - Right side rear	1	
	68033-05	B	BAFFLE ASSEMBLY - Right side rear	1	
-10	68032-00		BAFFLE ASSEMBLY - Left side front	1	
-11	68031-00		BAFFLE ASSEMBLY - Left side center	1	
-12	68030-00		BAFFLE ASSEMBLY - Left side rear	1	
13	68032-00		BAFFLE ASSEMBLY - Engine, right front	1	32-40000 to 32-7240065 incl
	99761-00		BAFFLE ASSEMBLY - Engine, right front	1	32-7240066 and up
-14	68031-00		BAFFLE ASSEMBLY - Engine, rear center	1	32-40000 to 32-40515 inclusive
	68031-04		BAFFLE ASSEMBLY - Engine, rear center	1	32-40516 to 32-40565 inclusive
	68031-05	A	BAFFLE ASSEMBLY - Engine, rear center	1	32-40566 and up
	68031-07	B	BAFFLE ASSEMBLY - Engine, rear center	1	
-15	68030-00	D	BAFFLE ASSEMBLY - Engine, right rear	1	
	68030-10	E	BAFFLE ASSEMBLY - Engine, right rear	1	
-16	68029-00	A	BAFFLE ASSEMBLY - Engine, left rear	1	32-40000 to 32-7540198 incl
	68029-09	C	BAFFLE ASSEMBLY - Engine, left rear	1	
-17	65103-02		ROD - Baffle tie	2	
-18	454 930	W	CLAMP - (PS10017-2-6)	3	
-19	454 927	W	CLAMP - (PS10017-2-2)	3	
-20	418 420	W	SCREW - Cap (1/4-20NC3 x 1/2L)	14	
	407 136	W	WASHER - (AN936-A41B)	14	
	407 565	W	WASHER - (AN960-416)	14	
-21	418 942		CAP SCREW - (3/8-16NC3 x 3/4L)	2	
	407 567	W	WASHER - (AN960-616)	2	
	407 138		WASHER - (AN936-A61B)	2	
-22	415 447	W	SCREW - (AN526-832R7)	4	
	477 672		NUT - (MU832-38-025/ 050-L-F10)	4	
-23	415 447	W	SCREW - (AN526-832R7)	1	
	477 673		NUT - (MU832-38-050/ 075-L-F10)	1	
-24	415 448	W	SCREW - (AN526-832R8)	5	
	407 583	W	WASHER - (AN960-8L)	5	
	404 833	W	NUT - (MS20364-832C)	5	
-25	415 448	W	SCREW - (AN526-832R8)	3	
	407 583	W	WASHER - (AN960-8L)	3	
26	417 772		SCREW - (AN520-10R7)	3	
	404 835	W	NUT - (MS20364-1032C)	3	
-27	404 829	W	NUT - (MS20364-632C)	4	
-28	415 995	W	SCREW - (AN526-1032R8)	9	
	407 584	W	WASHER - (AN960-10)	9	
	404 835	W	NUT - (MS20364-1032C)	9	

When ordering, always specify Part Number, Description and Serial Number of Aircraft

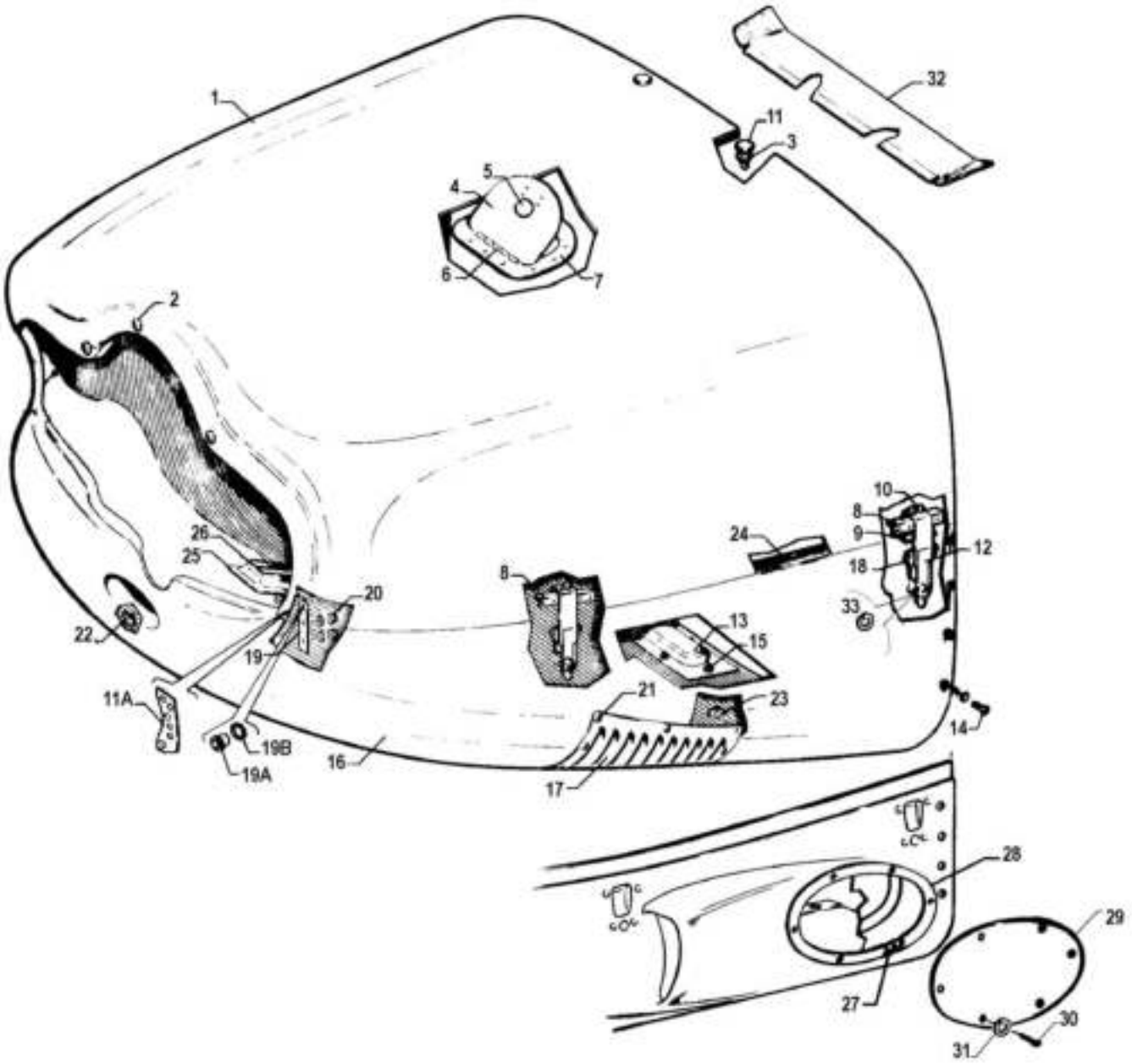

Figure 74. Engine Cowl Assembly

CODE EXPLANATIONS FOR FIGURE 74

A - Used on PA-32-260 only.
B - Used on PA-32-300 only.
C - Used on PA-32S-300 Seaplane Model only.
D - Used if existing oil filler door dimensions are 5 inches wide by 4 3/4 inches long.
E - Used if existing oil filler door dimensions are 5 3/4 inches wide by 5 inches long.
F - Used on PA-32-260 with serial numbers 32-824 to 32-7400026 inclusive, and PA-32-300 with serial numbers 32-40000 to 32-7440068 inclusive.
G - Used on PA-32-260 with serial numbers 32-7400027 and up, and PA-32-300 with serial numbers 32-7440069 and up.
H - Used on PA-32-260 with serial numbers 32-7300018 and up, and PA-32-300 with serial numbers 32-7340072 and up.
J - Used on PA-32-260 with serial numbers 32-1 and up, and PA-32-300 with serial numbers 32-40000 to 32-7540198 inclusive.

PIPER PARTS CATALOG

Figure and Index Number	Part Number	Code	NOMENCLATURE	No. Req.	SERIAL NUMBERS AFFECTED
74-	68700	A	DRAWING - Power Plant Installation		32-1 to 32-1110 inclusive
	69478	A	DRAWING - Power Plant Installation		32-1111 and up
	68383	B	DRAWING - Power Plant Installation		32-40000 to 32-40565 inclusive
	69479	B	DRAWING - Power Plant Installation		32-40566 and up
-1	68780-05	A	COWL ASSEMBLY - Engine top, less fasteners	1	
	68780-06	B	COWL ASSEMBLY - Engine top, less fasteners	1	
-2	581 025		* PLUG - (15-903)	5	
-3	494 060		* WASHER - (2600 LW)	2	
-4	65291-07	D	* DOOR ASSEMBLY - Oil filler	1	
	99096-03	E	* DOOR ASSEMBLY - Oil filler	1	
-5	472 017		** LATCH - Oil filler door (KM610-32)	1	
-6	65291-03		** HINGE - Oil filler door	1	
-7	68786-00	D	* PLATE - Reinforcement oil access	1	
	99094-02	E	* PLATE ASSEMBLY - Reinforcement, oil access	1	
-8	69809-00		* ANGLE - Cowl latch support, left	2	
	69809-01		* ANGLE - Cowl latch support, right	2	
-9	79469-00		* PLATE - Cowl	4	
-10	401 266		* BOLT - (AN3-5A)	8	
	407 564		* WASHER - (AN960-10)	32	
	404 835		* NUT - (MS20364-1032C)	8	
-11	26246-00		* FASTENER - Cowl top	2	
-11a	65148-00		* PLATE ASSEMBLY - Cowl pin, left	1	
	65148-01		* PLATE ASSEMBLY - Cowl pin, right	1	
-12	65202-00	A	FASTENER ASSEMBLY - Cowl	4	32-1 to 32-823 inclusive
	65202-05	F	FASTENER ASSEMBLY - Cowl	4	
	69917-00	G	FASTENER ASSEMBLY - Cowl	4	
-13	65178-02		STIFFENER ASSEMBLY - Lower cowl	1	
	65159-00	C	STIFFENER ASSEMBLY - Lower cowl	1	32S-40000 to 32S-7240055 incl.
	69159-02	C	STIFFENER ASSEMBLY - Lower cowl	1	32S-7240056 to 32S-7240147
-14	416 996		SCREW - (AN526-1032R10)	10	
	407 564		WASHER - (AN960-10)	10	
-15	416 995		SCREW - (AN526-1032R8)	15	
	407 564	C	WASHER - (AN960-10)	15	32S-40000 to 32S-7240147 incl.
	404 887	C	NUT - (MS20365-1032C)	15	32S-40000 to 32S-7240147 incl.
-16	68781-00	A	COWL ASSEMBLY - Engine bottom, complete	1	32-1 to 32-823 incl.
	68781-02	A	COWL ASSEMBLY - Engine bottom, complete	1	32-824 and up
	68819-02	B	COWL ASSEMBLY - Engine bottom, complete	1	32-40000 to 32-7240055 incl.
	68819-03	B	COWL ASSEMBLY - Engine bottom, complete	1	32-7240056 to 32-7540198 incl.
	38086-15	B	COWL ASSEMBLY - Engine bottom, complete	1	32-7640001 and up
	69130-00	C	COWL ASSEMBLY - Engine bottom, complete	1	32S-40000 to 32S-7240055 incl.
	69130-02	C	COWL ASSEMBLY - Engine bottom, complete	1	32S-7240056 to 32S-7240147
-17	65151-00	J	* LOUVER - Bottom cowl	2	
-18	65889-00		* CUP ASSEMBLY - Cowl fastener	4	
-19	69791-00		* PLATE ASSEMBLY - Bottom cowl	2	
-19a	69790-00		** BUSHING - Cowl plate assembly	1	
-19b	484 840		** RING - Retaining (5100-55)	1	

When ordering, always specify Part Number, Description, and Serial Number of Aircraft

PIPER PARTS CATALOG

Figure and Index Number	Part Number	Code	NOMENCLATURE	No. Req.	SERIAL NUMBERS AFFECTED
74-20	62833-28		* WASHER	4	
	404 836		* NUT - (MS20364-428C)	4	
-21	414 763	J	* SCREW - (AN507-832R8)	16	
-22	406 646		* NUT - Anchor (NAS 1068A06L)	1	
-23	404 834	J	* NUT - Anchor (NAS686A08)	16	
-24	65070-05		* WEBBING - Bottom cowl	2	
-25	68786-00	A	* RETAINER - Air filter seal	1	
	68143-00	B	* RETAINER - Air filter seal	1	32-40000 to 32-7540198 incl.
-26	63086-00	A	* SEAL - Air filter	1	
	68161-00	B	* SEAL - Air filter	1	32-40000 to 32-7540198 incl.
-27	484 305	B	* RECEPTACLE - “Camloc” (212-12)	6	32-7640001 and up
-28	38086-14	B	* SEAL - Air filter box	1	32-7640001 and up
-29	38019-08	B	COVER - Air filter	1	32-7640001 and up
-30	487 707	B	STUD - (2600-6)	6	32-7640001 and up
-31	494 060	B	WASHER - (2600-LW)	6	
-32	69119-00	C	FLANGE - Lower cowl	1	32S-40000 to 32S-7240147
-33	484 428	H	RETAINER - (85-34-101-20)	AR	

When ordering, always specify Part Number, Description, and Serial Number of Aircraft

2E24

INTENTIONALLY LEFT BLANK

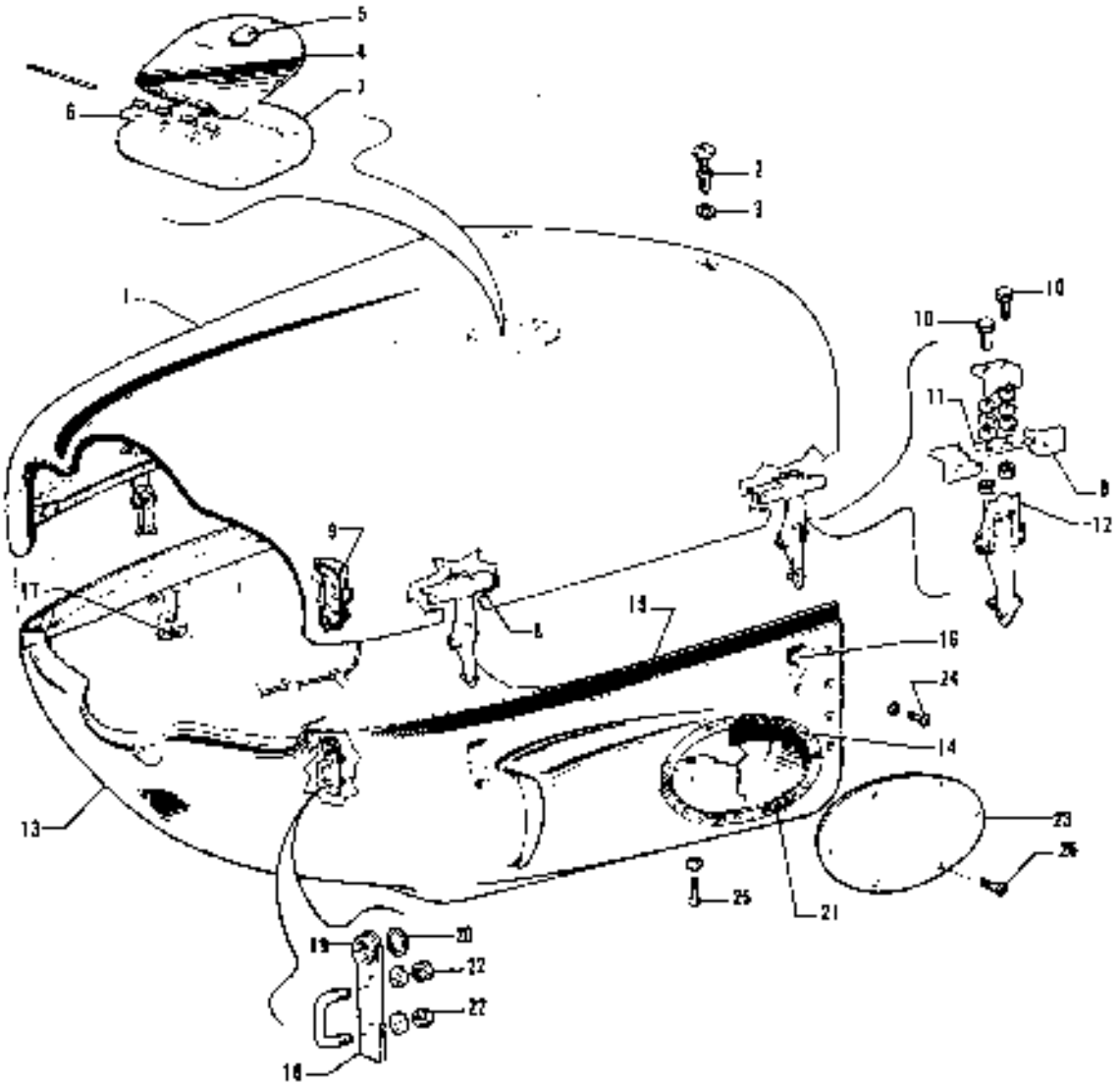

Figure 75 Engine Cowl Assembly

CODE EXPLANATIONS FOR FIGURE 76

W - These parts must be ordered from Service Spares Department, Piper Aircraft, Lock Haven, Penna.

PIPER PARTS CATALOG

Figure and Index Number	Part Number	Code	NOMENCLATURE	No Req	SERIAL NUMBERS AFFECTED
75-	36029		DRAWING - Engine Cowl Assembly and Installation		
-1	68760-04		COWL ASSEMBLY - Engine top	1	
2	26246-00	W	* STUD - Cowl top	2	
-3	494 060	W	* WASHER - (2600 LW)	2	
-4	99096-00		* DOOR ASSEMBLY - Oil filler	1	
-5	472 017	W	* * LATCH - Oil filler door (KM610-32)	1	
6	65291-03		* * HINGE ASSEMBLY - Oil filler door	1	
-7	99094-02		* PLATE ASSEMBLY - Reinforcement, oil access	1	
-8	69809-00		* ANGLE - Cowl latch support, left	2	
	69809-01		* ANGLE - Cowl latch support, right	2	
-9	65148-00		* PLATE ASSEMBLY - Cowl pin, left	1	
	65148-01		* PLATE ASSEMBLY - Cowl pin, right	1	
-10	401 288	W	* BOLT - (AN3-6A)	8	
	407 564	W	* WASHER (AN960-10)	32	
	404 835	W	* NUT (MS20364 1032C)	8	
-11	79469-00		* PLATE - Cowl	4	
-12	69917-00		* FASTENER ASSEMBLY - Cowl	1	
-13	38086-00		COWL ASSEMBLY - Bottom	1	
-14	38086-14		* SEAL - Air filter box	1	
15	65070-05		* WEBBING - Cowl bottom	2	
-16	65869-00		* CUP ASSEMBLY - Cowl fastener	4	
-17	484 483		* RECEPTACLE (PS10077-1 62)	4	
-18	69791-00		* PLATE ASSEMBLY - Cowl	2	
-19	69790-00		* * BUSHING - Cowl plate assembly	1	
-20	484 840		* * RING - Retaining (5100-55)	1	
-21	484 205		* RECEPTACLE - "Camloc" (212-12)	6	
-22	404 838	W	* NUT - (MS20364-428C)	4	
	62833-28		* WASHER	4	
23	38019-08		COVER - Air filter	1	
-24	411 632		SCREW - (MS35207-263)	10	
	407 564	W	WASHER - (AN960-10)	10	
-25	416 765		SCREW (MS24693 S272)	14	
	484 037	W	WASHER - (PS10092-1-3C)	14	
-26	487 707	W	STUD ASSEMBLY - "Camloc" (2600-6)	6	

When ordering, always specify Part Number, Description and Serial Number of Aircraft

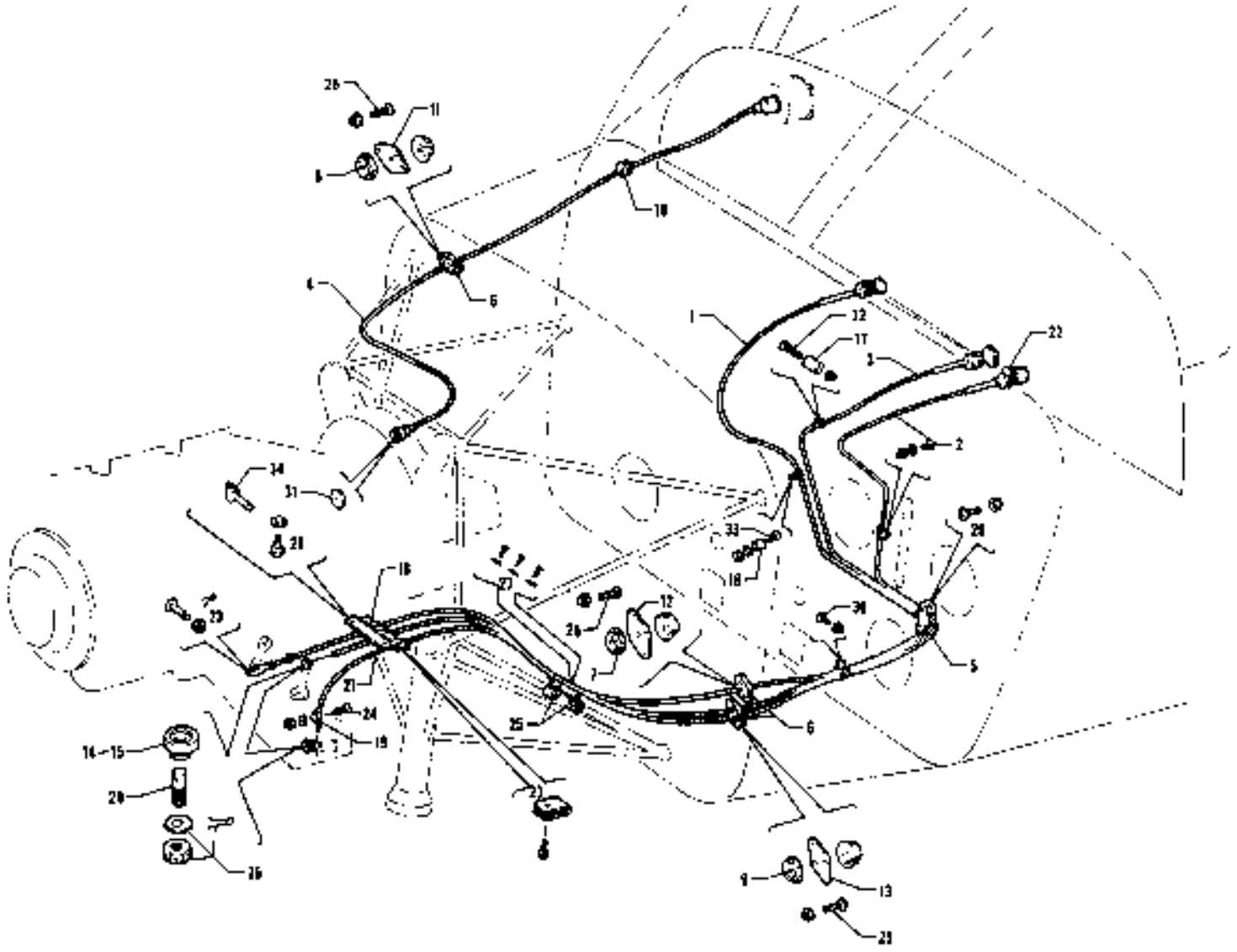

Figure 28. Engine Controls Installation
(Serial Nos. 32-1 to 32-1110 inclusive)

CODE EXPLANATIONS FOR FIGURE 78

W - These parts must be ordered from Service Spares Department, Piper Aircraft, Lock Haven, Penna.

PIPER PARTS CATALOG

Figure and Index Number	Part Number	Code	NOMENCLATURE	No. Req.	SERIAL NUMBERS AFFECTED
76-	68705		DRAWING - Engine Controls Installation		
-1	63902-12		CABLE ASSEMBLY - Mixture control	1	
	66616-00		KNOB - Mixture control	1	
-2	63902-13		CABLE ASSEMBLY - Carburetor heat control	1	32-1 to 32-450 inclusive
	63902-21		CABLE ASSEMBLY - Carburetor heat control	1	32-451 and up
	66617-00		KNOB - Heat control	1	
-3	63630-00		CABLE ASSEMBLY - Throttle control	1	
-4	488 688		SHAFT - Tachometer (446156) 60"	1	
-5	68706-00		BLOCK ASSEMBLY - Engine controls	1	
-6	68788-00		PLATE - Firewall seal grommet	6	
-7	22104-04		GROMMET - Firewall seal	2	
-8	68770-18		GROMMET - Firewall seal	2	
-9	68770-02		GROMMET - Firewall seal	2	
-10	434 160		GROMMET - (AN931-4S-16)	1	
-11	68771-06		GASKET - Firewall seal	1	
-12	22105-06		GASKET - Firewall seal	1	
-13	68771-02		GASKET - Firewall seal	1	
-14	70371-02	W	FITTING - Swivel, carburetor heat control	1	
-15	81193-00		FITTING - Swivel, mixture control	1	
-16	63900-36		BUSHING - Cable clamp	1	
-17	63900-25		BUSHING - Cable clamp	1	
-18	63916-02		CLAMP - Throttle control cable	2	
-19	554 690		CLAMP - Carburetor heat control cable (MS122901)	1	
-20	70371-03	W	STUD - Control cable	2	
-21	65210-00		BRACKET - Control cable	2	
-22	62987-00		CLIP - Carburetor heat control cable	1	
-23	400 674	W	BOLT - (AN23-12)	1	
	404 100	W	NUT - (AN310-3)	1	
	424 051	W	COTTER PIN - (AN380-2-2)	1	
-24	417 776	W	SCREW - (AN520-10R8)	2	
	407 584	W	WASHER - (AN960-10L)	2	
	404 835	W	NUT - (MS20364-1032C)	2	
-26	417 776	W	SCREW - (AN520-10R8)	8	
	404 835	W	NUT - (MS20364-1032C)	8	
-28	424 051	W	COTTER PIN - (AN380-2-2)	2	
	407 584	W	WASHER - (AN960-10L)	2	
	404 392	W	NUT - (AN320-3)	2	
-27	417 776	W	SCREW - (AN520-10R8)	6	
	477 671	W	NUT - (MU1032-45-.025/.050-L-F10)	6	
-28	419 420	W	SCREW - (1/4-20NC3 x 1/2)	2	
	408 811	W	WASHER - (1214-00-00-0511)	2	
-29	416 993	W	SCREW - (AN526-1032R14)	2	
	404 835	W	NUT - (MS20364-1032C)	2	
-30	417 776	W	SCREW - (AN520-10R10)	1	
	404 835	W	NUT - (MS20364-1032C)	1	
-31	85012-14		WASHER - Tachometer shaft	1	
-32	417 776	W	SCREW - (AN520-10R14)	1	
	404 835	W	NUT - (MS20364-1032C)	1	
-33	417 776	W	SCREW - (AN520-10R14)	1	
	407 584	W	WASHER - (AN960-10L)	1	
	404 835	W	NUT - (MS20364-1032C)	1	
-34	68740-00		SUPPORT ASSEMBLY - Mixture control	1	32-257 and up

When ordering, always specify Part Number, Description and Serial Number of Aircraft

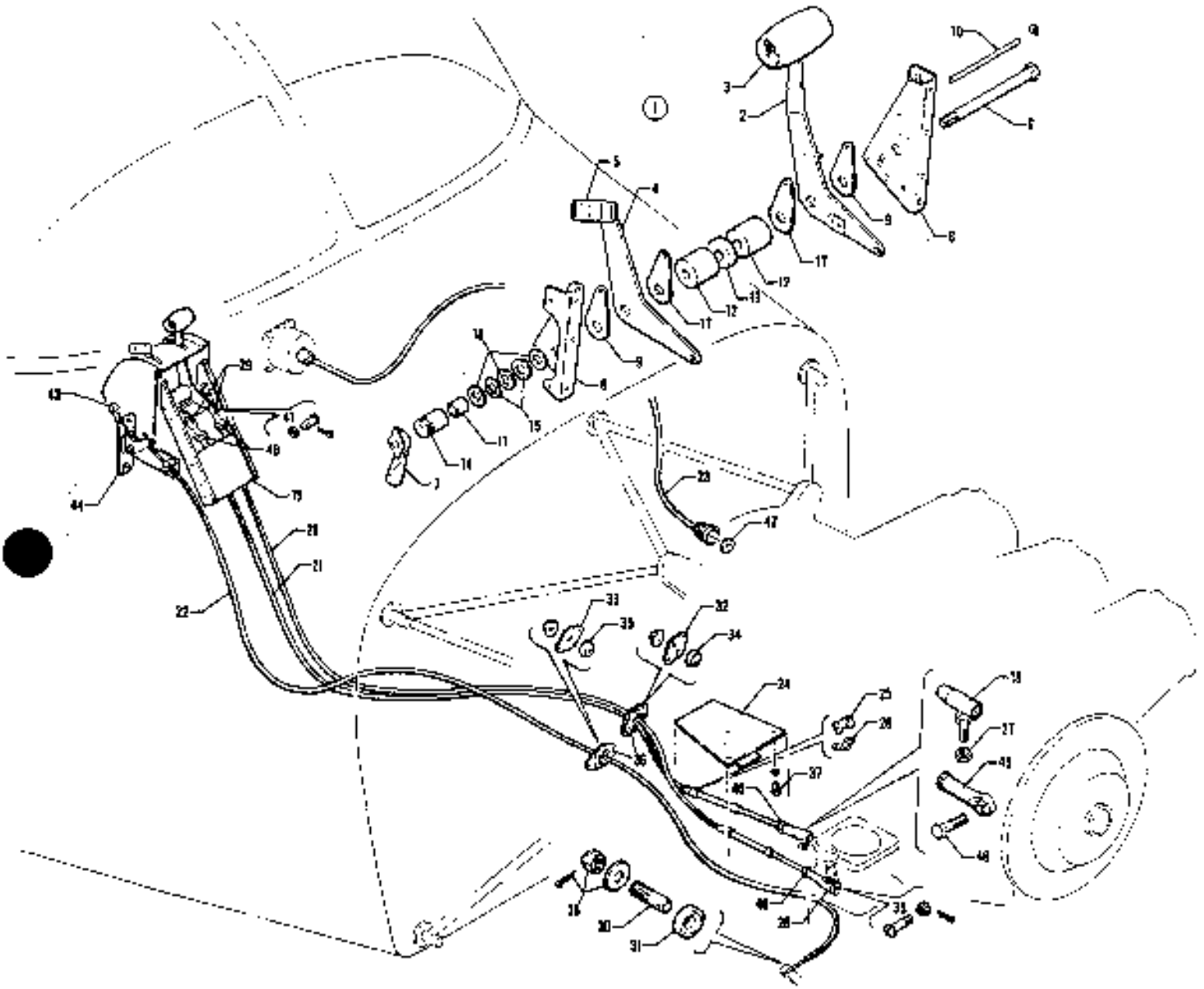

Figure 77. Engine Controls Installation
(Serial Nos. 32-111 to 32-7200085 Inclusive)

CODE EXPLANATIONS FOR FIGURE 77

A - See Figure 83 if constant speed propeller is installed.
B - If Engine Tach Cable Rerouting Kit 763 916 has previously been installed, order tachometer shaft P/N 454 312 only as a replacement.
C - Reference latest revision to Piper Service Letter 747. Inspect throttle and mixture control attachments and, if necessary, replace using Kit 760-891.

PIPER PARTS CATALOG

Figure and Index Number	Part Number	Code	NOMENCLATURE	No. Req.	SERIAL NUMBERS AFFECTED
77-	69468		DRAWING - Engine Controls Installation		
-1	69320-01	A	QUADRANT ASSEMBLY - Control	1	
-2	67223-00		* LEVER ASSEMBLY - Throttle	1	
-3	67212-00		* * KNOB - Throttle lever	1	
-4	67214-00		* LEVER - Mixture control	1	
-5	24048-00		* KNOB - Mixture control (571 044)	1	
-6	418 461		* SCREW - Cap (MS35291-46)	1	
-7	24358-00		* HANDLE ASSEMBLY - Quadrant adjusting	1	
-8	67215-00		* BRACKET ASSEMBLY - Quadrant, left	1	
	67216-00		* BRACKET ASSEMBLY - Quadrant, right	1	
-9	67218-00		* PLATE - Quadrant, friction	2	
-10	69319-00		* PIN - Friction plate	1	
-11	62714-04		* BEARING - Spacer	1	
-12	68699-08		* SPACER - Quadrant	2	32-1111 to 32-1116 inclusive
	68699-14		* SPACER - Quadrant	2	32-1117 to 32-7200055 incl.
-13	68699-09		* SPACER - Quadrant	1	
-14	24357-00		* NUT - Quadrant adjusting	1	
-15	408 815		* WASHER - (3502-18-04)	2	
-16	407 566		* WASHER - (AN960-516)	3	
-17	67218-00		* PLATE - Quadrant, friction	2	32-1111 to 32-1116 inclusive
	67218-02		* PLATE - Quadrant, friction	2	32-1117 to 32-7200055 incl.
-18	31747-00	C	JOINT ASSEMBLY - Ball, spring type (469 141)	1	
-19	69324-00		MOUNT ASSEMBLY - Cockpit engine controls	1	32-1111 to 32-1250 inclusive
	69324-02		MOUNT ASSEMBLY - Cockpit engine controls	1	32-1251 to 32-7200055 incl.
-20	455 360		CONTROL CABLE ASSEMBLY - Throttle (PS50146-13-9)	1	
-21	455 361		CONTROL CABLE ASSEMBLY - Mixture (PS50146-13-8)	1	
-22	66856-05		CONTROL CABLE ASSEMBLY - Carburetor heat	1	
-23	763 916	B	KIT - Engine tachometer shaft relocation	1	
-24	69461-00		BRACKET ASSEMBLY - Engine control	1	
-25	69011-00		BRACKET - Control cable support	2	
-26	69012-00		CLAMP - Control cable attachment	2	
-27	63020-02		BUSHING - Mixture control arm	1	
	404 887		NUT - (MS20365-1032C)	1	
-28	454 905		CLEVIS - Throttle control (RA-13-187-2C)	1	
-29	488 327		TERMINAL - Clevis (AN665-21R)	2	
-30	70371-03		STUD - Carburetor heat control	1	
-31	70371-02		FITTING - Swivel, carburetor heat control	1	
-32	68771-08		GASKET - Firewall seal	1	
-33	22105-03		GASKET - Firewall seal	1	
-34	68770-06		GROMMET - Firewall seal	2	
-35	68770-14		GROMMET - Firewall seal	2	
-36	66789-00		PLATE - Firewall grommet	4	
-37	418 420		SCREW - Cap (1/4-2ONC-3 x 1/2" L.)	2	
	407 136		WASHER - (AN936-A416)	2	
-38	404 100		NUT - (AN310-3)	1	
	407 584		WASHER - (AN960-10L)	1	
	424 051		COTTER PIN - (AN380-2-2)	1	
-39	400 674		BOLT - (AN23-12)	1	
	404 100		NUT - (AN310-3)	1	
	424 051		COTTER PIN - (AN380-2-2)	1	
-40	404 224		NUT - (AN315-3R)	4	
	407 104		WASHER - (AN935-10)	4	

When ordering, always specify Part Number, Description, and Serial Number of Aircraft

PIPER PARTS CATALOG

Figure and Index Number	Part Number	Code	NOMENCLATURE	No. Req.	SERIAL NUMBERS AFFECTED
77-41	524 145		PIN - Clevis (MS20392 2C11)	2	
	407 584	W	WASHER - (AN960-10L)	2	
	424 050	W	PIN - Cotter (AN380-2 1)	2	
-42	80612-14		WASHER - Tachometer shaft	1	
-43	22297-00	W	KNOB - Carburetor heat control	1	32-1111 to 32-1250 inclusive
	66980-00		KNOB - Carburetor heat control	1	32 1251 to 32-7200055 incl
-44	66865-00		CONTROL ASSEMBLY - Carburetor heat	1	
-45	452 606	W	BEARING Rod end, mixture control (PS10020-16-2)	1	
-46	400 055	W	BOLT - (AN3-10)	1	
	63900-78		BUSHING	1	
	62833-101		WASHER - (.562 O D)	1	
	62833-103		WASHER - (.312 O D)	1	
	404 100	W	NUT - (AN310-3)	1	
	424 051	W	PIN - Cotter (MS24665-132)	1	

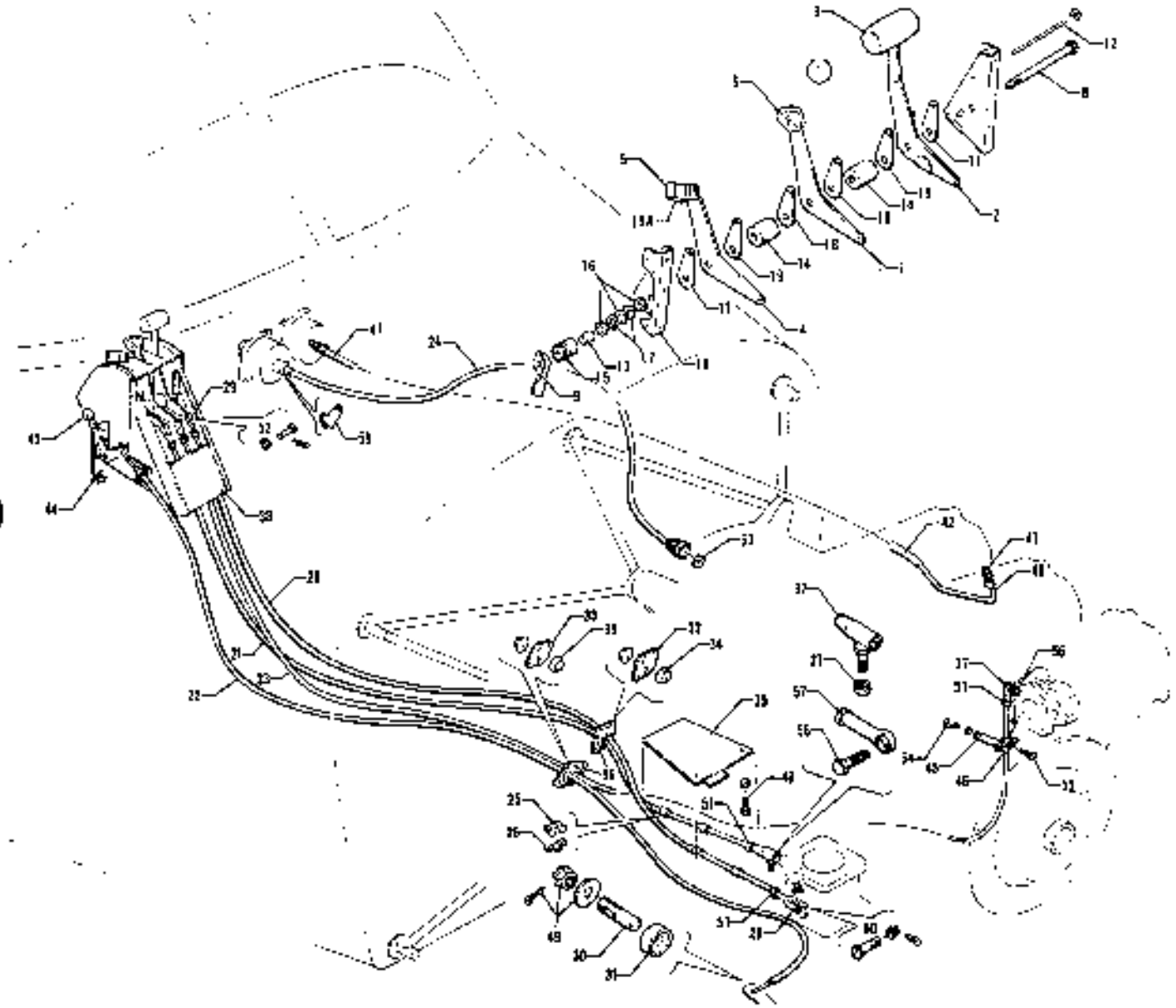

Figure 78. Engine Controls Installation
(Serial Nos. 32-7300001 and up)

CODE EXPLANATIONS FOR FIGURE 78

A - If Engine Tach Cable Rerouting Kit 763 916 has previously been installed, order tachometer shaft P/N 454 312 only as a replacement.
B - Angle drive not required if Engine Tach Cable Rerouting Kit 763 916 has been installed.
C - Reference latest revision to Piper Service Bulletin 538. Control cable assembly part numbers listed on Service Bulletin 538 are no longer available.
D - Reference latest revision to Piper Service Letter 747. Inspect throttle and mixture control attachments and, if necessary, replace using Kit 760-891.

PIPER PARTS CATALOG

Figure and Index Number	Part Number	Code	NOMENCLATURE	No. Req.	SERIAL NUMBERS AFFECTED
78-	69468		DRAWING - Engine Controls Installation		
	69480		DRAWING - Constant Speed Propeller Installation		
-1	69320-00		QUADRANT ASSEMBLY - Control	1	32-7300001 to 32-7400061 incl.
	69320-02		QUADRANT ASSEMBLY - Control	1	32-7500001 and up
-2	67223-00		* LEVER ASSEMBLY - Throttle	1	
-3	67212-00		* * KNOB - Throttle lever	1	
-4	67214-00		* LEVER - Mixture control	1	32-7300001 to 32-7400061 incl.
	79349-00		* LEVER - Mixture control	1	32-7500001 and up
-5	24048-00		* KNOB - Mixture control (571 044)	1	
-6	24047-00		* KNOB - Propeller control (571 043)	1	
-7	69485-00		* LEVER - Propeller control	1	
-8	418 461		* SCREW - Cap (MS35291-46)	1	
-9	24358-00		* HANDLE ASSEMBLY - Quadrant adjusting	1	
-10	67215-00		* BRACKET ASSEMBLY - Quadrant, left	1	
	67216-00		* BRACKET ASSEMBLY - Quadrant, right	1	
-11	67218-00		* PLATE - Quadrant, friction	2	
-12	69319-00		* PIN - Friction plate	1	
-13	62714-04		* BEARING - Spacer	1	
-14	68699-14		* SPACER - Quadrant	2	
-15	24357-00		* NUT - Quadrant adjusting	1	
-16	407 566		* WASHER - (AN960-516)	3	
-17	408 815		* WASHER - (3502-18-04)	2	
-18	62833-50		* WASHER	2	
-19	67218-02		* PLATE - Quadrant, friction	2	
-19a	79473-00		* PLATE - Mixture control	1	32-7500001 and up
-20	455 360		CONTROL CABLE ASSEMBLY - Throttle (PS50146-13-9)	1	
-21	455 361	C	CONTROL CABLE ASSEMBLY - Mixture (PS50146-13-8)	1	
-22	66856-05		CONTROL CABLE ASSEMBLY - Carburetor heat	1	
-23	455 359		CONTROL CABLE ASSEMBLY - Governor (PS50146-13-18)	1	
-24	763 916	A	KIT - Tachometer shaft relocation	1	
-25	69011-00		BRACKET - Control cable support	2	
-26	69012-00		CLAMP - Control cable attachment	2	
-27	63020-02		BUSHING - Mixture control arm	1	
	404 887		NUT - (MS20365-1032C)	1	
-28	554 757		CLEVIS - Throttle control (MS35812-1)	1	
-29	488 327		TERMINAL - Clevis (AN665-21R)	3	
-30	70371-03		STUD - Carburetor heat control	1	
-31	70371-02		FITTING - Swivel, carburetor heat control	1	
-32	68771-08		GASKET - Firewall seal	1	
-33	68771-10		GASKET - Firewall seal	1	
-34	68770-06		GROMMET - Firewall seal	2	
-35	68770-12		GROMMET - Firewall seal	2	
-36	66789-00		PLATE - Firewall grommet	4	
-37	31747-00	D	JOINT ASSEMBLY - Ball, sprint type (469 141)	2	
-38	69324-02		MOUNT ASSEMBLY - Cockpit engine controls	1	
-39	69461-00		BRACKET ASSEMBLY - Engine control	1	
-40	65438-00		TUBE ASSEMBLY - Manifold pressure gauge	1	
-41	67700-50		TUBE ASSEMBLY - Manifold pressure gauge	1	
-42	63913-49		HOSE - Manifold pressure gauge	1	
-43	66980-00		KNOB - Carburetor heat control	1	
-44	66855-00		CONTROL ASSEMBLY - Carburetor heat	1	
-45	69546-00		BRACKET ASSEMBLY - Propeller pitch control	1	
-46	18219-02		CLAMP - Control cable attachment	1	
-47	460 685		CONNECTOR - (W/H 200 x 4)	1	

When ordering, always specify Part Number, Description, and Serial Number of Aircraft

PIPER PARTS CATALOG

Figure and Index Number	Part Number	Code	NOMENCLATURE	No. Req.	SERIAL NUMBERS AFFECTED
76-48	401 818	W	SCREW - (MS20074-04-09)	2	
	408 832		WASHER - (1214-00-00-05661)	2	
-49	404 100	W	NUT - (AN310-3)	1	
	407 584	W	WASHER - (AN960-10L)	1	
	424 051	W	COTTER PIN - (MS24665-132)	1	
-50	400 674	W	BOLT - (AN23-12)	1	
	404 100	W	NUT - (AN310-3)	1	
	424 051	W	COTTER PIN - (MS24665-132)	1	
-51	404 224	W	NUT - (AN315-3R)	6	
	407 104	W	WASHER - (AN935-10)	6	
-52	524 145		PIN - Clevis (MS20392-2C11)	3	
	407 584	W	WASHER - (AN960-10L)	3	
	424 050	W	COTTER PIN - (AN380-2-1)	3	
-53	85012-14		WASHER - Tachometer shaft	1	
-54	418 420	W	SCREW - Cap (1/4-20 NC-3 x 1/2)	1	
	407 106	W	WASHER - (AN935-416)	1	
55	415 450	W	SCREW - (AN526-832R10)	2	
	407 563	W	WASHER - (AN960-8)	2	
	404 910	W	NUT - (MS20365-832C)	2	
-56	404 687	W	NUT - (MS20365-1032C)	1	
	407 584	W	WASHER - (AN960-10)	2	
-57	452 606	W	BEARING - Rod end, mixture control (PS10020-16-2)	1	
-58	400 055	W	BOLT - (AN3-10)	1	
	83800-78		BUSHING	1	
	62833-101		WASHER - (.08 Thick)	1	
	62833-103		WASHER - (.08 Thick)	1	
	404 100	W	NUT - (AN310-3)	1	
	424 051	W	COTTER PIN - (MS24665-132)	1	
59	551 986	B	ANGLE DRIVE - (ES407010)	1	32-7800018 and up

When ordering, always specify Part Number, Description and Serial Number of Aircraft

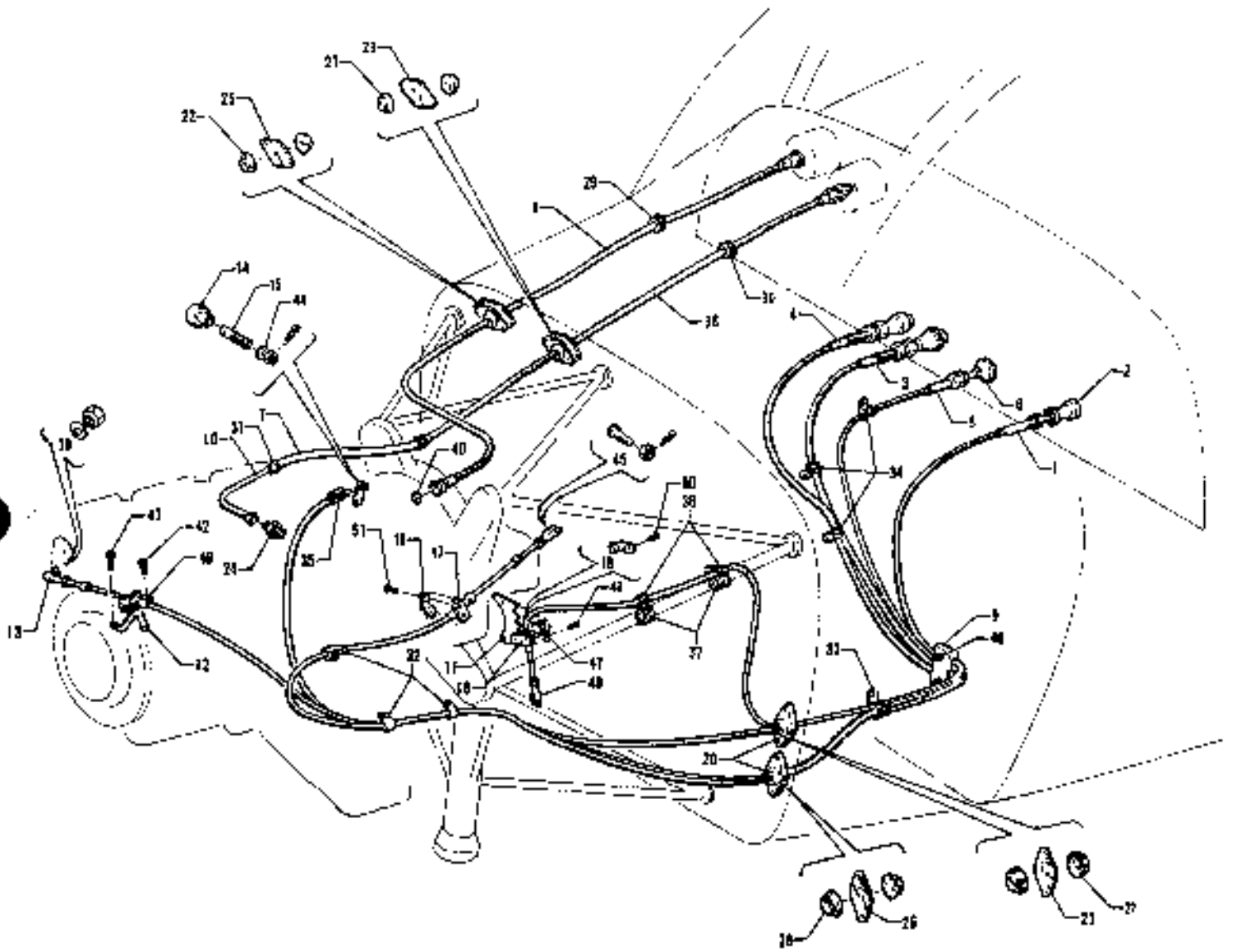

Figure 7B. Engine Controls Installation
(Serial Nos. 32-40000 to 32-40666 inclusive)

CODE EXPLANATIONS FOR FIGURE 79

A - Used if knob with retaining ring is installed.
B - Reference latest revision to Piper Service Bulletin 252.
C - Reference latest revision to Piper Service Letter 747.

PIPER PARTS CATALOG

Figure and Index Number	Part Number	Code	NOMENCLATURE	No. Req.	SERIAL NUMBERS AFFECTED
79-	68044		DRAWING - Engine Controls Installation		
-1	63902-22		CABLE ASSEMBLY - Alternate air control	1	
-2	65617-00		* KNOB - Alternate air control	1	
-3	65451-04		CABLE ASSEMBLY - Propeller control	1	
-4	65451-06	B	CABLE ASSEMBLY - Mixture control	1	
-5	69530-02		CABLE ASSEMBLY - Throttle control	1	
-6	756 044	A	RING - Retainer	1	
-7	69015-03		HOSE - Flexible, manifold pressure line	1	
-8	486 589		SHAFT - Tachometer (446156) 60”	1	
-9	69001-00		BLOCK ASSEMBLY - Engine controls	1	
-10	68005-00		TUBE ASSEMBLY - Manifold pressure	1	
-11	69452-00		BRACKET ASSEMBLY - Mixture control cable	1	
-12	69546-00		BRACKET ASSEMBLY - Propeller pitch control	1	
-13	31747-00	C	JOINT ASSEMBLY - Ball spring type	1	
-14	70371-02		FITTING - Swivel, alternate air control	1	
-15	70371-03		STUD - Alternate air control	1	
-16	69012-00		CLAMP - Throttle control cable attachment	1	
-17	69011-00		LUG - Throttle control cable support bracket	1	
-18	69011-02		LUG - Mixture control cable support bracket	1	
-19	69012-00		CLAMP - Control cable attachment	1	
-20	66789-00		PLATE - Firewall seal grommet	8	
-21	68770-07		GROMMET - Firewall seal	2	
-22	68770-18		GROMMET - Firewall seal	2	
-23	22105-04		GASKET - Firewall seal	2	
-24	460 685		CONNECTOR - (200 X 4), manifold pressure line	1	
-25	68771-06		GASKET - Firewall seal	1	
-26	68771-02		GASKET - Firewall seal	1	
-27	68770-06		GROMMET - Firewall seal	2	
-28	68770-02		GROMMET - Firewall seal	2	
-29	434 160		GROMMET - (AN931-4S-16)	1	
-30	434 124		GROMMET - (AN931-4-12)	1	
-31	454 983		CLAMP - (SAE 8) Type “E”	2	
-32	454 813		CLAMP - (TA724-S4)	4	
-33	454 988		CLAMP - (A3046S-7-91)	1	
-34	454 974		CLAMP - (A3O46S-4-91)	3	
-35	454 928		CLAMP - (PS10017-2-3)	1	
-36	454 929		CLAMP - (PS10017-2-4)	3	
-37	454 935		CLAMP - (A4980S-10-91)	2	
-38	65152-19		TUBE ASSEMBLY - Manifold pressure line	1	
-39	407 564		WASHER - (AN960-10)	2	
	404 887		NUT - (MS20365-1032C)	1	
-40	85012-14		WASHER	1	
-41	400 438		BOLT - (AN3-4A)	2	
	407 584		WASHER - (AN960-10L)	2	
-42	415 450		SCREW - (AN526-832R10)	2	
	407 563		WASHER - (AN960-8)	2	
	404 910		NUT - (MS20365-832C)	2	
-43	418 420		SCREW - Cap (1/4-20NC-3 x 1/2)	1	
	407 103		WASHER - (AN935-416)	1	

When ordering, always specify Part Number, Description, and Serial Number of Aircraft

PIPER PARTS CATALOG

Figure and Index Number	Part Number	Code	NOMENCLATURE	No. Req.	SERIAL NUMBERS AFFECTED
78-44	404 392	W	NUT - (AN320-3)	1	
	424 061	W	COTTER PIN - (AN380-2-2)	1	
	407 564	W	WASHER - (AN960-10L)	1	
	407 585	W	WASHER - (AN960-416)	1	
	407 585	W	WASHER - (AN960-416L)	1	
-45	400 674	W	BOLT - (AN23-12)	2	
	404 100	W	NUT - (AN310-3)	2	
	424 061	W	COTTER PIN - (AN380-2-2)	2	
-46	416 963	W	SCREW - (AN525-1032R14)	2	
	404 635	W	NUT - (MS20364-1032C)	2	
-47	454 929	W	CLAMP - (P610017-2-4)	1	
-48	18219-02	W	CLAMP - Control cable attachment	1	
-49	454 905	W	CLEVIS - Mixture control (RA13-187-2C)	1	
-50	418 649		SCREW - (MS24678-100	2	
	407 564	W	WASHER - (AN960-10L)	2	
	404 867	W	NUT - (MS20365-1032C)	2	
-51	418 600		SCREW - (MS24677-24)	2	

When ordering, always specify Part Number, Description and Serial Number of Aircraft

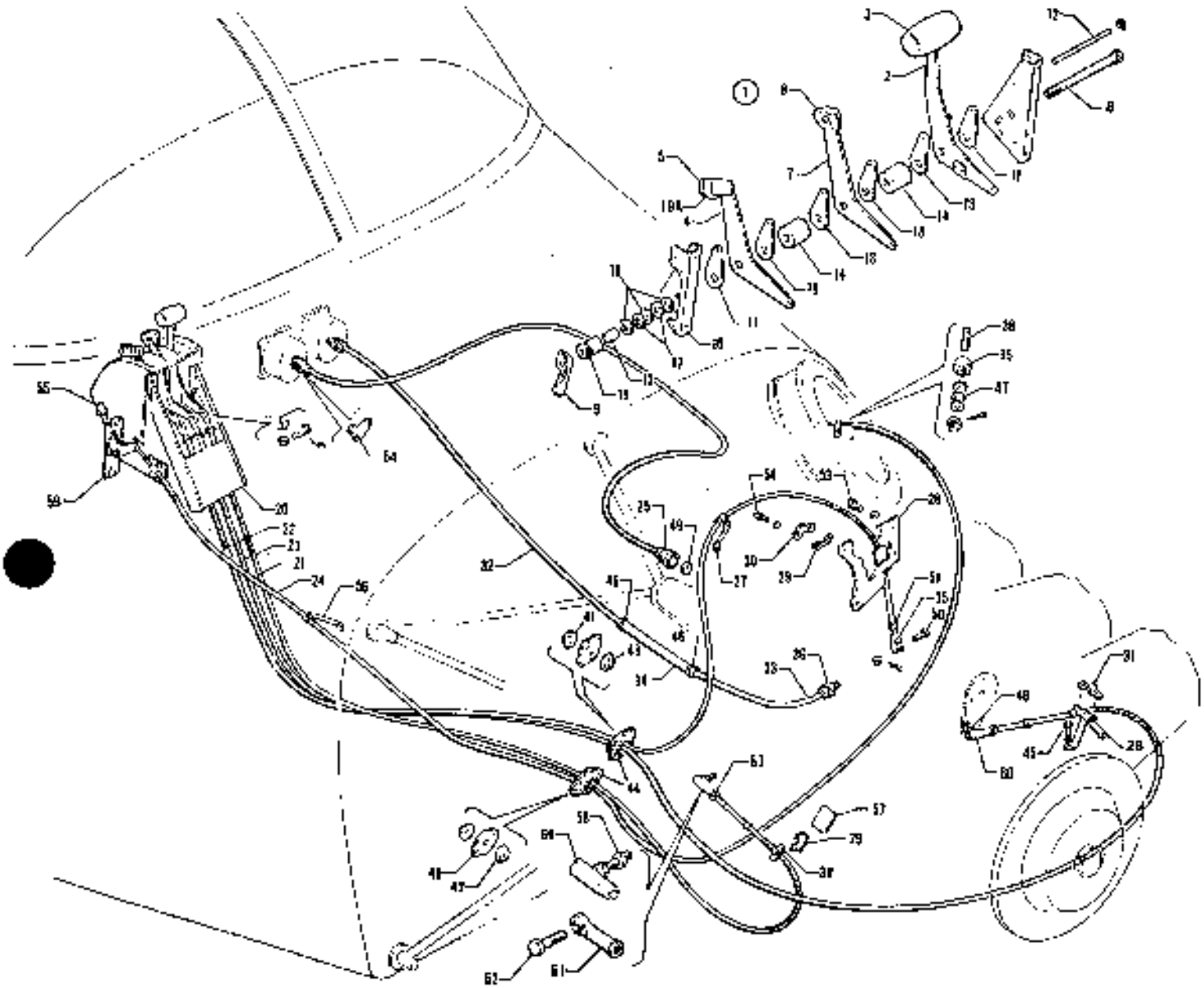

Figure 80 Engine Controls Installation
(Serial Nos. 32-40565 and up)

CODE EXPLANATIONS FOR FIGURE 80

A - Reference latest revision to Piper Service Letter 869, Part III. If Engine Tach Cable Rerouting Kit 763 916 has previously been installed, order tachometer shaft listed for serial Nos. 32-7940146, 32-7940280 and up.
B - Angle drive not required if Engine Tach Cable Rerouting Kit 763 916 has been installed.
C - Reference latest revision to Piper Service Bulletin 538. Control cable assembly part numbers listed on Service Bulletin 538 are no longer available.
D - Reference latest revision to Service Letter 747. Inspect throttle and mixture control attachments and, if necessary, replace using Kit No. 760 889.
E - Reference latest revision to Piper Service Bulletin 537. Reports from the field have been received regarding inadvertent disconnection of the throttle control cable from the throttle arm.

PIPER PARTS CATALOG

Figure and Index Number	Part Number	Code	NOMENCLATURE	No. Req.	SERIAL NUMBERS AFFECTED
80-	69469		DRAWING - Engine Controls Installation		
-1	69320-00		QUADRANT ASSEMBLY - Control	1	32-40566 to 32-7440182
	69320-02		QUADRANT ASSEMBLY - Control	1	32-7540001 and up
-2	67223-00		* LEVER ASSEMBLY - Throttle	1	
-3	67212-00		* * KNOB - Throttle lever	1	
-4	67214-00		* LEVER - Mixture control	1	32-40566 to 32-7440182 incl.
	79349-00		* LEVER - Mixture control	1	32-7540001 and up
-5	24048-00		* KNOB - Mixture control (571 044)	1	
-6	24047-00		* KNOB - Propeller control (571 043)	1	
-7	69485-00		* LEVER - Propeller control	1	
-8	418 461		* SCREW - Cap (MS35291-46)	1	
-9	24358-00		* HANDLE ASSEMBLY - Quadrant adjusting	1	
-10	67215-00		* BRACKET ASSEMBLY - Quadrant, left	1	
	67216-00		* BRACKET ASSEMBLY - Quadrant, right	1	
-11	67218-00		* PLATE - Quadrant, friction	2	
-12	69319-00		* PIN - Friction plate	1	
-13	62714-04		* BEARING - Spacer	1	
-14	68699-08		* SPACER - Quadrant	2	32-40566 to 32-40615 inclusive
	68699-14		* SPACER - Quadrant	2	32-40616 and up
-15	24357-00		* NUT - Quadrant adjusting	1	
-16	407 566		* WASHER - (AN960-516)	3	
-17	408 815		* WASHER - (3502-18-04)	2	
-18	67218-00		* PLATE - Quadrant, friction	2	32-40566 to 32-40615 inclusive
	62833-50		* WASHER	2	32-40616 and up
-19	67218-00		* PLATE - Quadrant, friction	2	32-40566 to 32-40615 inclusive
	67218-02		* PLATE - Quadrant, friction	2	32-40616 and up
-19a	79473-00		* PLATE - Mixture control	1	32-7540001 and up
-20	69324-00		MOUNT ASSEMBLY - Cockpit engine controls	1	32-40566 to 32-40850 inclusive
	69324-02		MOUNT ASSEMBLY - Cockpit engine controls	1	32-40851 and up
-21	455 358		CONTROL CABLE ASSEMBLY - Throttle (PS50146-13-13)	1	
-22	455 357	C	CONTROL CABLE ASSEMBLY - Mixture (PS50146-13-16)	1	
-23	455 356		CONTROL CABLE ASSEMBLY - Propeller pitch (PS50146-13-19)	1	
-24	554 051		CONTROL CABLE ASSEMBLY - Alternate air (PS50146-4-8)	1	
-25	763 916	A	KIT - Engine tachometer shaft relocation	1	32-40566 to 32-7940145, 32-7940147 to 32-7940279 incl.
	454 312		SHAFT - Tachometer (PS5044-28)	1	32-7940146, 32-7940280 - up
-26	69546-00		BRACKET ASSEMBLY - Propeller pitch control	1	
-27	63944-00		BRACKET - Mixture control	1	
-28	69452-00		BRACKET ASSEMBLY - Mixture control cable	1	
-29	69011-00		BRACKET - Control cable support	2	
-30	69012-00		CLAMP - Control cable attachment	2	
-31	18219-02		CLAMP - Propeller pitch cable	1	
-32	67700-48		TUBE ASSEMBLY - Manifold pressure	1	
-33	68005-00		TUBE ASSEMBLY - Manifold pressure	1	
-34	69015-08		HOSE - Manifold pressure	1	
-35	554 757		CLEVIS - Control cable (MS35812-1)	1	
-36	460 685		CONNECTOR - (W/H 200 x 4)	1	
-37	488 327		TERMINAL - Clevis (AN665-21R)	3	
-38	70371-03		STUD - Alternate air	1	
-39	70371-02		FITTING - Swivel, alternate air	1	
-40	68771-08		GASKET - Firewall seal, engine side	1	
-41	68771-10		GASKET - Firewall seal, engine side	1	
-42	68770-06		GROMMET - Firewall seal	2	
-43	68770-12		GROMMET - Firewall seal	2	
-44	66789-00		PLATE - Firewall seal	4	
-45	418 420		SCREW - Cap (1/4-20NC3 x 1/2" L)	1	
	407 044		WASHER - Lock (MS35338-44)	1	

When ordering, always specify Part Number, Description, and Serial Number of Aircraft

PIPER PARTS CATALOG

Figure and Index Number	Part Number	Code	NOMENCLATURE	No. Req.	SERIAL NUMBERS AFFECTED
80-46	454 983		CLAMP - (SAE 8) Type “E”	2	
-47	404 100		NUT - (AN310-3)	1	
	424 051		COTTER PIN - (MS24665-132)	1	
	407 584		WASHER - (AN960-10L) Under nut	1	
	407 565		WASHER - (AN960-416) Under nut	1	
	407 585		WASHER - (AN960-416L) Under nut	1	
-48	404 887		NUT - (MS20365-1032C)	1	
	407 564		WASHER - (AN960-10)	2	
-49	85012-14		WASHER - Tachometer shaft	1	
-50	400 674		BOLT - (AN23-12)	1	
	404 100		NUT - (AN310-3)	1	
	424 051		COTTER PIN - (MS24665-132)	1	
-51	404 224		NUT - (AN315-3R)	5	
	407 043		WASHER - (MS35338-43)	5	
-52	524 145		PIN - (MS20392-2C11)	3	
	407 584		WASHER - (AN960-10L)	3	
	424 050		COTTER PIN - (AN380-2-1)	3	
-53	400 438		BOLT - (AN3-4A)	2	
	407 584		WASHER - (AN960-10L)	2	
-54	418 650		SCREW - Cap (MS24678-11)	2	
	407 564		WASHER - (AN960-10)	2	
	404 887		NUT - (MS20365-1032C)	2	
-55	22287-00		KNOB - Alternate air control	1	32-40566 to 32-40850 inclusive
	66980-00		KNOB - Alternate air control	1	32-40851 and up
-56	69308-00		ARM - Alternate air cable	1	
-57	69434-00		BRACKET - Adapter, control cable	1	
-58	404 887		NUT - (MS20365-1032C)	1	
-59	66855-00		CONTROL ASSEMBLY - Alternate air	1	32-40566 to 32-7540198 incl.
	66855-04		CONTROL ASSEMBLY - Alternate air	1	32-76400001 and up
-60	31747-00	D	JOINT ASSEMBLY - Ball, spring type (469-141)	2	
-61	452 606	E	BEARING - Rod end, throttle control (PS10020-16-2)	1	
-62	400 055	E	BOLT - (AN3-10)	1	32-40566 to 32-7440122 incl.
	400 056		BOLT - (AN3-11)	1	32-7440123 to 32-7540198 incl.
	401 269		BOLT - (AN3-10A)	1	32-7640001 and up
	63900-78		BUSHING	1	32-40566 to 32-7540198 incl.
	62833-101		WASHER	1	
	407 584		WASHER - (AN960-10)	1	32-40566 to 32-7540198 incl.
	407 584	E	WASHER - (AN960-10)	3	32-7640001 and up
	404 100		NUT - (AN310-3)	1	32-40566 to 32-7540198 incl.
	404 887	E	NUT - (MS20365-1032C)	1	32-7640001 and up
	424 051		COTTER PIN - (MS24665-132)	1	32-40566 to 32-7540198 incl.
-63	404 224		NUT - (AN315-3R)	1	
	407 044		WASHER - (MS35338-44)	1	
-64	551 986	B	ANGLE DRIVE - (ES407010)	1	32-7640098 to 32-7940145 incl. 32-7940147 to 32-7940279 incl.

When ordering, always specify Part Number, Description, and Serial Number of Aircraft

2F23 THRU 2F24

INTENTIONALLY LEFT BLANK

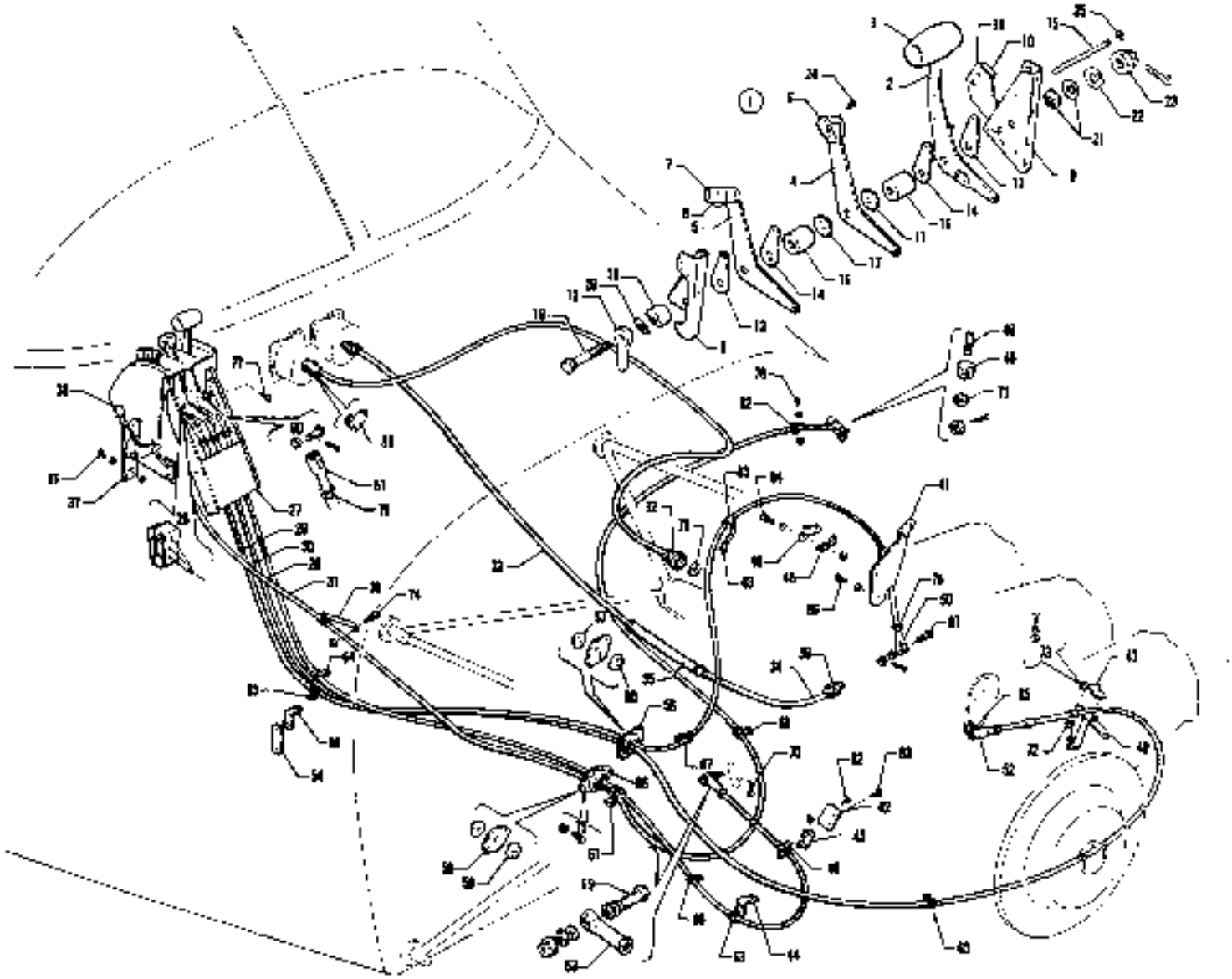

Figure 8 Engine Controls Installation

CODE EXPLANATIONS FOR FIGURE 81

A - Reference latest revision to Piper Service Letter 869, Part III. If Engine Tach Cable Rerouting Kit 763 916 has previously been installed, order tachometer shaft P/N 454 312 only as a replacement.
B - Angle drive not required if Engine Tach Cable Rerouting Kit 763 916 has been installed.
C - Reference latest revision to Piper Service Bulletin 537. Reports from the field have been received regarding inadvertent disconnection of the throttle control cable from the throttle arm.
D - Reference latest revision to Piper Service Bulletin 538. Control cable assembly part numbers listed on Service Bulletin 538 are no longer available.

PIPER PARTS CATALOG

Figure and Index Number	Part Number	Code	NOMENCLATURE	No. Req.	SERIAL NUMBERS AFFECTED
81-	38090		DRAWING - Engine Controls Installation		
-1	38091-00		QUADRANT ASSEMBLY - Control	1	
-2	67223-04		* LEVER ASSEMBLY - Throttle	1	
-3	66979-00		** KNOB - Throttle lever	1	
-4	69485-00		* LEVER - Propeller control	1	
-5	67214-00		* LEVER - Mixture control	1	
-6	24047-00		* KNOB - Propeller control	1	
-7	24048-00		* KNOB - Mixture control	1	
-8	79473-00		* PLATE - Mixture control	1	
-9	67215-03		* BRACKET ASSEMBLY - Quadrant, left	1	
	67216-00		* BRACKET ASSEMBLY - Quadrant, right	1	
-10	38200-00		* SWITCH - Quadrant	1	
-11	38202-00		* BRACKET - Switch	1	
	486 195		* SCREW (FPI 2-56 x 5/8 long RD, HD, SS)	2	
	690 621		* WASHER (NAS1149FN416P)	2	
	477 710		* NUT (FPI 67212)	2	
-12	66773-00		* HANDLE - Quadrant adjusting	1	
-13	67218-00		* PLATE - Quadrant control, friction	2	
-14	67218-02		* PLATE - Quadrant control, friction	2	
-15	69319-00		* PIN - Quadrant friction plate	1	
-16	68699-14		* SPACER - Quadrant control	2	
-17	62833-50		* WASHER	2	
-18	66774-00		* CAM - Quadrant control	1	
-19	400 185		* BOLT - (AN5-43)	1	
-20	62833-46		* WASHER	1	
-21	408 815		* WASHER - (3502-18-04)	2	
-22	407 566		* WASHER - (AN960-516)	AR	
-23	404 394		* NUT - (AN320-5)	1	
	424 051		* COTTER PIN - (MS24665-132)	1	
-24	415 533		* SCREW - (MS35206-243)	2	
-25	406 345		* NUT - (A109-014-1)	2	
-26	38094-00		SWITCH ASSEMBLY - Throttle lever (with actuator)	1	
-27	69324-03		MOUNT ASSEMBLY - Cockpit engine controls	1	
-28	555 815	D	CONTROL CABLE ASSEMBLY - Throttle (PS50146-13-20)	1	
-29	455 357	D	CONTROL CABLE ASSEMBLY - Mixture (PS50146-13-16)	1	
-30	554 350		CONTROL CABLE ASSEMBLY - Propeller (PS50146-13-14)	1	
-31	554 051		CONTROL CABLE ASSEMBLY - Alternate air (PS50146-4-8)	1	
-32	763 916	A	KIT - Tachometer shaft relocation	1	
-33	67700-48		TUBE ASSEMBLY - Manifold pressure	1	
-34	68005-00		TUBE ASSEMBLY - Manifold pressure	1	
-35	69015-08		HOSE - Manifold pressure	1	
-36	460 685		CONNECTOR - (W/H 200x4)	1	
-37	66855-04		CONTROL ASSEMBLY - Alternate air	1	
-38	66980-00		KNOB - Alternate air	1	
-39	69308-00		ARM - Alternate air cable	1	
-40	69546-00		BRACKET - Propeller pitch control	1	
-41	38084-00		BRACKET ASSEMBLY - Mixture control	1	
-42	69434-00		BRACKET - Adapter control cable	1	
-43	63944-00		BRACKET - Mixture control	1	
-44	68911-00		CLIP - Control cable	2	
-45	69011-00		LUG - Control cable support bracket	2	
-46	69012-00		CLAMP - Control cable attachment	2	
-47	18219-02		CLAMP - Propeller control cable	1	
-48	70371-03		STUD - Alternate air	1	
-49	70371-02		FITTING - Swivel, alternate air	1	
-50	554 757		CLEVIS - Control (MS35812-1)	1	
-51	488 327		TERMINAL - Clevis (AN665-21R)	3	

When ordering, always specify Part Number, Description, and Serial Number of Aircraft

PIPER PARTS CATALOG

Figure and Index Number	Part Number	Code	NOMENCLATURE	No. Req.	SERIAL NUMBERS AFFECTED
81-52	31747-00		JOINT ASSEMBLY - Ball, spring type (469 141)	1	
-53	452 606	C	BEARING - Rod end, throttle control (PS10020-16-2)	1	
-54	38090-02		LINK - Clamp attachment	1	
-55	38090-03		ANGLE - Clip, clamp attachment	1	
-56	66789-00		PLATE - Firewall seal	4	
-57	68771-10		GASKET - Firewall seal, engine side	1	
-58	68770-06		GROMMET - Firewall seal	2	
-59	68771-08		GASKET - Firewall seal, engine side	1	
-60	68770-12		GROMMET - Firewall seal	2	
-61	454 932		CLAMP - (PS10017-2-7)	2	
-62	454 887		CLAMP - (PS10017-1-3)	1	
-63	454 929		CLAMP - (PS10017-2-4)	11	
-64	454 930		CLAMP - (PS10017-2-6)	2	
-65	454 813		CLAMP - (PS10017-4-4)	3	
-66	454 935		CLAMP - (PS10017-2-10)	1	
-67	454 977		CLAMP - (PS10017-2-16)	1	
-68	454 868		CLAMP - (PS10017-2-12)	1	
-69	401 269	C	BOLT - (AN3-10A)	1	
	407 584	C	WASHER - (AN960-10)	3	
	62833-101		WASHER	1	
	404 887	C	NUT - (MS20365-1032C)	1	
-70	424 051		COTTER PIN - (MS24665-132)	1	
-71	407 584		WASHER - (AN960-10L)	1	
	404 100		NUT - (AN310-3)	1	
	424 051		COTTER PIN - (MS24665-132)	1	
-72	418 420		CAP SCREW - (1/4-2ONC-3 x 1/2)	1	
	407 044		WASHER - (MS35338-44)	1	
-73	415 536		SCREW - (MS35206-246)	2	
	407 563		WASHER - (AN960-8)	2	
	404 910		NUT - (MS20365-832C)	2	
-74	411 533		SCREW - (MS35207-264)	1	
	404 887		NUT - (MS20365-1032C)	1	
-75	415 535		SCREW - (MS35206-245)	4	
	404 910		NUT - (MS20365-832C)	4	
-76	415 535		SCREW - (MS35206-245)	1	
	407 563		WASHER - (AN960-8)	1	
	404 910		NUT - (MS20365-832C)	1	
-77	415 535		SCREW - (MS35206-245)	7	
-78	85012-14		WASHER - Tachometer shaft	1	
-79	404 224		NUT - (AN315-3R)	4	
	407 043		WASHER - Lock (MS35338-43)	4	
-80	407 584		WASHER - (AN960-10L)	3	
	524 145		PIN - (MS20392-2C11)	3	
	424 050		COTTER PIN - (AN380-3-1)	3	
-81	415 533		SCREW - (MS35206-243)	2	
	407 584		WASHER - (AN960-10L)	2	
	404 833		NUT - (MS20364-832C)	2	
-82	404 887		NUT - (MS20365-1032C)	2	
	411 534		SCREW - (MS35207-265)	2	
-83	418 600		SCREW - (MS24677-24)	2	
-84	418 650		SCREW - (MS24678-11)	2	
	407 564		WASHER - (AN960-10)	2	
	404 887		NUT - (MS20365-1032C)	2	
-85	404 887		NUT - (MS20365-1032C)	1	
	407 564		WASHER - (AN960-10)	2	
-86	400 438		BOLT - (AN3-4A)	2	
	407 584		WASHER - (AN960-10L)	2	

When ordering, always specify Part Number, Description, and Serial Number of Aircraft

PIPER PARTS CATALOG

Figure and Index Number	Part Number	Code	NOMENCLATURE	No Req	SERIAL NUMBERS AFFECTED
91-87	400 674	W	SCREW - (AN23 12)	1	
	407 564	W	WASHER - (AN960-10L)	1	
	404 100	W	NUT - (AN310-3)	1	
	424 051	W	COTTER PIN (MS24665-132)	1	
-88	551 966	B	ANGLE DRIVE - (ES407010)	1	32R-7680002, 32R-7680331 and up

When ordering, always specify Part Number, Description and Serial Number of Aircraft

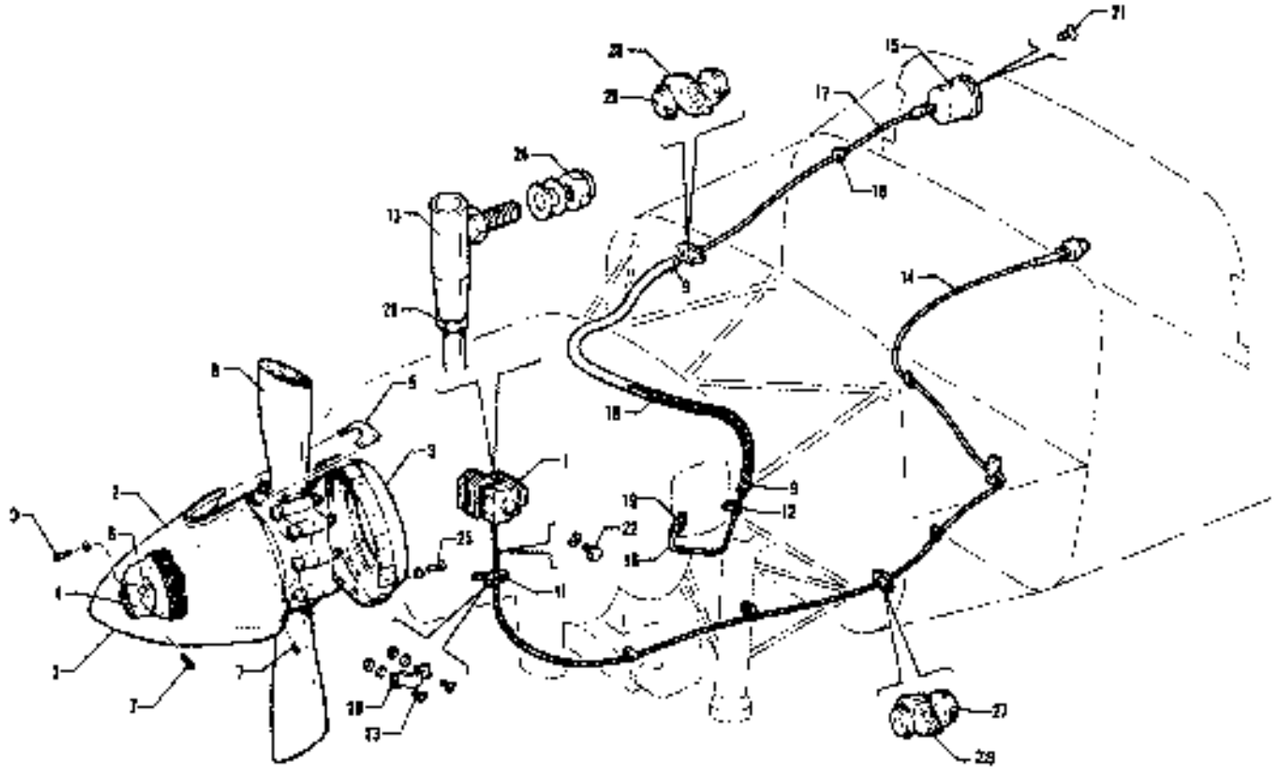

Figure 82. Constant Speed Propeller Installation
(Serial Nos. 32-1 to 32-1110 inclusive)

CODE EXPLANATIONS FOR FIGURE 82

A - If existing spinner is constructed of fiberglass, order Spinner Replacement Kit 760 452.
B - See Figure 84 for component parts.
C - Reference latest revision to Piper Service Letter 707, which calls for replacement of the governor flyweight assembly on Hartzell propeller governor equipped Piper airplanes.
D - Reference latest revision to Piper Service Letter 495.

PIPER PARTS CATALOG

Figure and Index Number	Part Number	Code	NOMENCLATURE	No. Req.	SERIAL NUMBERS AFFECTED
82-	68712		DRAWING - Constant Speed Propeller Installation		
	68705		DRAWING - Engine Controls Installation		
	68239		DRAWING - Instruments Installation		
-1	66634-03	C	GOVERNOR - Propeller	1	
-2	67790-00	A	SPINNER SHELL - Propeller	1	
-3	67791-00	A	BULKHEAD ASSEMBLY - Spinner, aft	1	
-4	67793-00	A	BULKHEAD ASSEMBLY - Spinner, forward	1	
	67793-03	A	BULKHEAD ASSEMBLY - Spinner, forward	1	32-01 thru 32-7800008
-5	67794-00	A	CUFF - Spinner	2	
-6	99499-00	A	PLATE - Spinner	1	
-7	415 379	A	SCREW - (MS51958-63)	28	
	494 227	A	WASHER - Fiber (PS10063-2)	28	
-8	550 936	B	PROPELLER ASSEMBLY - Hartzell (HC-C2YK-1BF/F8477-2)	1	
-9	454 983		CLAMP - (SAE8)	2	
-10	434 128		GROMMET - (MS35489-6)	1	
-11	69546-00		BRACKET ASSEMBLY - Propeller pitch control	1	
-12	454 929		CLAMP - (PS10017-2-4)	1	
-13	31747-00		JOINT - Ball	1	
-14	65451-03	D	CABLE ASSEMBLY - Governor control (57-3251-2133)	1	
-15	751 118		GAUGE - Manifold pressure	1	
-16	65438-00		TUBE ASSEMBLY - Manifold pressure gauge	1	
-17	65152-19		TUBE ASSEMBLY - Manifold pressure gauge	1	32-1 to 32-300 inclusive
	68023-00		TUBE ASSEMBLY - Manifold pressure gauge	1	32-301 and up
-18	63913-48		HOSE - Flexible, manifold pressure gauge	1	
-19	460 685		CONNECTOR - (W/H 200 x 4)	1	
-20	18219-02		CLAMP - Control cable attachment	1	
-21	415 151		SCREW - (AN536-632R12)	4	
-22	418 420		SCREW - Cap (1/4-20NC3 x 1/2)	1	
-23	415 450		SCREW - AN526-832R10)	2	
	407 563		WASHER - (AN960-8)	2	
	404 910		NUT - (MS20365-832C)	2	
-24	404 887		NUT - (MS20365-1032C)	1	
	407 564		WASHER - (AN960-10)	2	
-25	401 310		BOLT - (AN4-10A)	12	
	407 585		WASHER - (AN960-416L)	12	
	404 888		NUT - (MS20365-428C)	12	
-26	404 224		NUT - (AN315-3R)	1	
-27	68770-07		GROMMET - Firewall seal	2	
-28	22105-04		GASKET - Firewall seal	2	
-29	68770-06		GROMMET - Firewall seal	2	
-30	401 301	A	BOLT - (AN4H3A)	4	
	407 565	A	WASHER - (AN960-416)	8	

When ordering, always specify Part Number, Description, and Serial Number of Aircraft

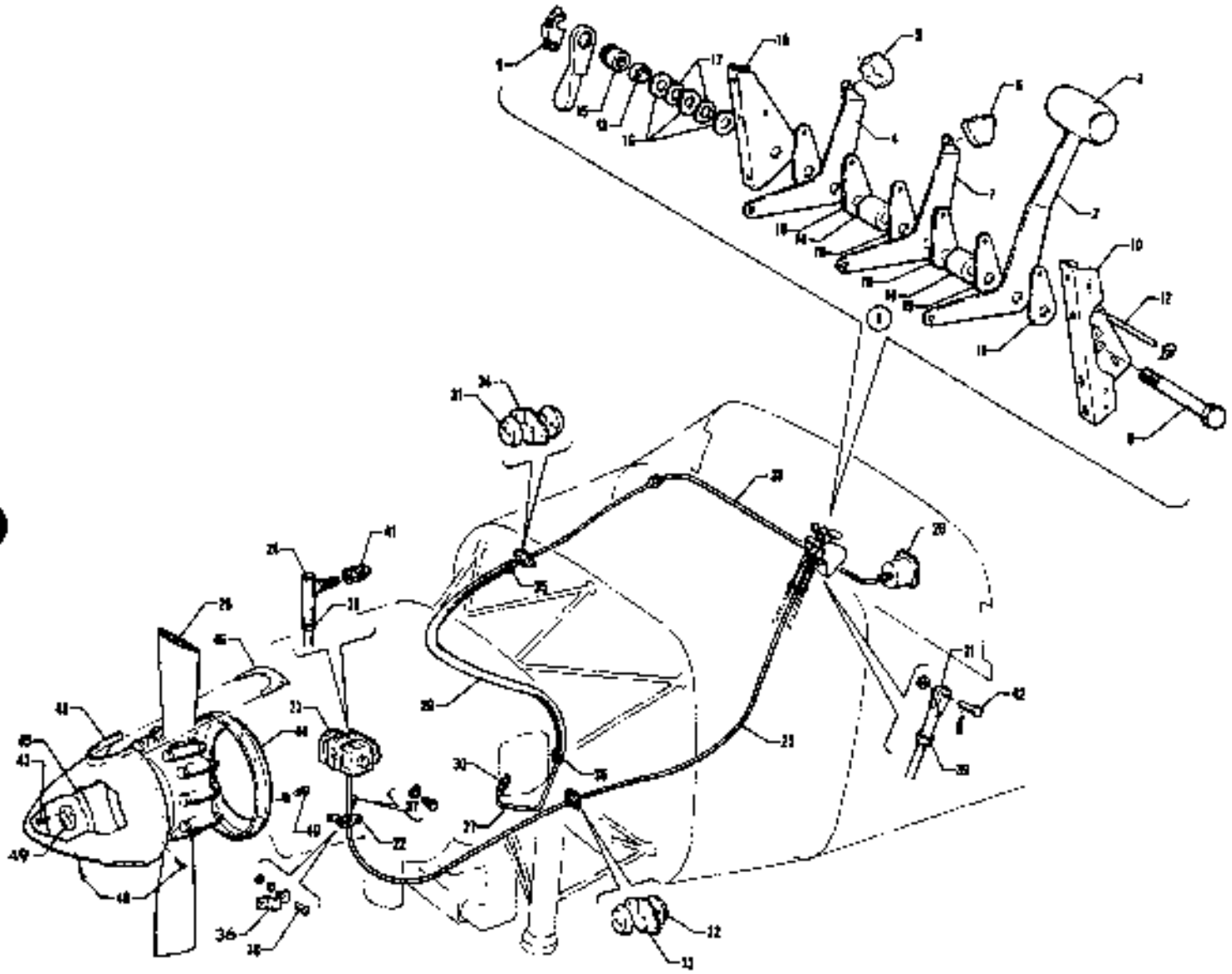

Figure 83. Constant Speed Propeller Installation
(Serial Nos. 32-1111 to 32-7200055 inclusive)

CODE EXPLANATIONS FOR FIGURE 83

A - See Figure 84 for component parts.
B - If existing spinner is constructed of fiberglass, order Spinner Replacement Kit 760 452.
C - Reference latest revision to Piper Service Letter 707, which calls for replacement of the governor flyweight assembly on Hartzell propeller governor equipped Piper airplanes.

PIPER PARTS CATALOG

Figure and Index Number	Part Number	Code	NOMENCLATURE	No. Req.	SERIAL NUMBERS AFFECTED
83-	69480		DRAWING - Constant Speed Propeller Installation		
-1	69320-00		QUADRANT ASSEMBLY - Control	1	
-2	67223-00		* LEVER ASSEMBLY - Throttle	1	
-3	67212-00		* * KNOB - Throttle lever	1	
-4	67214-00		* LEVER - Mixture control	1	
-5	24048-00		* KNOB - Mixture control (571 044)	1	
-6	24047-00		* KNOB - Propeller control (571 043)	1	
-7	69485-00		* LEVER - Propeller control	1	
-8	418 461		* SCREW - Cap (MS35291-46)	1	
-9	24358-00		* HANDLE ASSEMBLY - Quadrant adjusting	1	
-10	67215-00		* BRACKET ASSEMBLY - Quadrant, left	1	
	67216-00		* BRACKET ASSEMBLY - Quadrant, right	1	
-11	67218-00		* PLATE - Quadrant, friction	2	
-12	69319-00		* PIN - Friction plate	1	
-13	62714-04		* BEARING - Spacer	1	
-14	68699-08		* SPACER - Quadrant	2	32-1111 to 32-1116 inclusive
	68699-14		* SPACER - Quadrant	2	32-1117 to 32-7200055 incl.
-15	24357-00		* NUT - Quadrant adjusting	1	
-16	407 566		* WASHER - (AN960-516)	3	
-17	408 815		* WASHER - (3502-18-04)	2	
-18	67218-00		* PLATE - Quadrant, friction	2	32-1111 to 32-1116 inclusive
	62833-50		* WASHER	2	32-1117 to 32-7200055 incl.
-19	67218-00		* PLATE - Quadrant, friction	2	32-1111 to 32-1116 inclusive
	67218-02		* PLATE - Quadrant, friction	2	32-1117 to 32-7200055 incl.
-20	550 936	A	PROPELLER ASSEMBLY - Hartzell (HC-C2YK-1BF/F8477-2)	1	
-21	554 757		TERMINAL - Clevis (MS35812-1)	1	
-22	69546-00		BRACKET ASSEMBLY - Propeller pitch control	1	
-23	66634-03	C	GOVERNOR - Propeller	1	
-24	31747-00		JOINT ASSEMBLY - Ball	1	
-25	67639-12		CABLE ASSEMBLY - Governor control	1	
-26	751 118		GAUGE - Manifold pressure	1	
-27	65438-00		TUBE ASSEMBLY - Manifold pressure gauge	1	
-28	67700-50		TUBE ASSEMBLY - Manifold pressure gauge	1	
-29	63913-49		HOSE - Manifold pressure gauge	1	
-30	460 685		CONNECTOR - (W/H 200 x 4)	1	
-31	68770-06		GROMMET - Firewall seal	2	
-32	68770-12		GROMMET - Firewall seal	2	
-33	68771-10		GASKET - Firewall seal	1	
-34	68771-08		GASKET - Firewall seal	1	
-35	454 983		CLAMP - (SAE 8)	2	
-36	18219-02		CLAMP - Control cable attachment	1	
-37	418 420		SCREW - Cap (1/4-2ONC-3 x 1/2)	1	
	407 044		WASHER - (MS35338-44)	1	
-38	415 536		SCREW - (MS35206-246)	2	
	407 563		WASHER - (AN960-8)	2	
	404 910		NUT - (MS20365-832C)	2	
-39	404 224		NUT - (AN315-3R)	2	
	407 043		WASHER - (MS35338-43)	2	
-40	401 310		BOLT - (AN4-10A)	12	
	407 585		WASHER - (AN960-416L)	12	
	404 888		NUT - (MS20365-428C)	12	
-41	404 887		NUT - (MS20365-1032C)	1	
	407 564		WASHER - (AN960-10)	2	
-42	524 145		PIN - Clevis (MS20392-2C11)	1	
	407 584		WASHER - (AN960-10L)	1	
	424 051		COTTER PIN - (MS24665-132)	1	

When ordering, always specify Part Number, Description, and Serial Number of Aircraft

PIPER PARTS CATALOG

Figure and Index Number	Part Number	Code	NOMENCLATURE	No. Req.	SERIAL NUMBERS AFFECTED
83-43	67790-00	B	SPINNER SHELL - Propeller	1	
-44	67791-00	B	BULKHEAD ASSEMBLY - Spinner, aft	1	
-45	67793-00	B	BULKHEAD ASSEMBLY - Spinner, forward	1	
	67793-03	B	BULKHEAD ASSEMBLY - Spinner, forward	1	
-46	67794-00	B	CUFF - Spinner	2	
-47	401 301	B	BOLT - (AN4H3A)	4	
	407 565	B	WASHER - (AN960-416)	8	
-48	415 379	B	SCREW - (MS51958-63)	28	
	494 227	B	WASHER - Fiber (PS10063-2)	28	
-49	99499-00	B	PLATE - Spinner	1	

When ordering, always specify Part Number, Description, and Serial Number of Aircraft

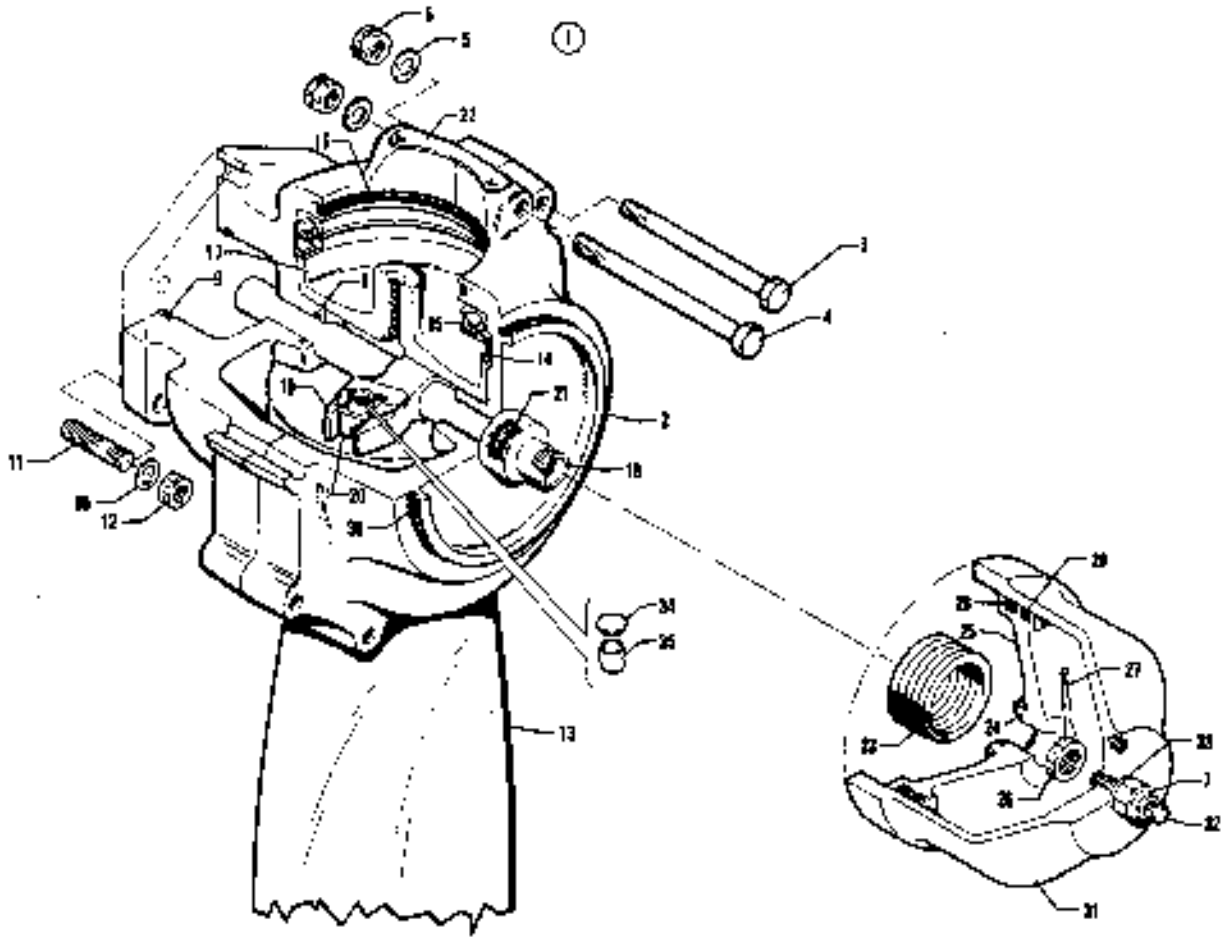

Figure 84. Propeller Assembly

CODE EXPLANATIONS FOR FIGURE 84

A - Used on PA-32-260 only.
B - Used on PA-32-300 only.
C - Used with Hartzell Propeller Assemblies HC-C2YK-1A/8477-2 and HC-C2YK-1B/8477-2.
D - Used with Hartzell Propeller Assembly HC-C2YK-1B/8475D-4.
E - Used with Hartzell Propeller Assembly HC-C2YK-1B/8475R-0.
F - Used with Hartzell Propeller Assembly HC-C2YK-1BF/F8475D-4.
G - Used with Hartzell Propeller Assembly HC-C2YK-1BF/F8475R-0.
H - Propeller assembly not available. Order Part No. 550 936.
J - Propeller assembly not available. Order Part No. 550 937.
K - Propeller assembly not available. Order Part No. 550 941.
L - Used with Hartzell Propeller Assemblies HC-C2YK-1A/8477-2, HC-C2YK-1B/8477-2, HC-C2YK-1B/8475D-4 and HC-C2YK-1B/8475R-0.
M - Used with Hartzell Propeller Assembly HC-C2YK-1BF/8475D-4, HC-C2YK-1BF/F8477-2 and HC-C2YK-1BF/F8475R-0.
N - Used with Hartzell Propeller Assembly HC-C2YK-1BF/F8477-2.
O - Used on PA-32-300 and PA-32R-300 only.
P - Used with Hartzell Propeller Assembly HC-C2YK-1A/8477-2.
Q - Used with Hartzell Propeller Assemblies HC-C2YK-1B/8477-2, HC-C2YK-1B/8475D-4, HC-C2YK-1BF/F8477-2, HC-C2YK-1BF/F8475D-4 and HC-C2YK-1BF/F8475R-0.
R - Used with Hartzell Propeller Assembly HC-C2YK-1/8475R-0.
S - Used with Hartzell Propeller Assembly HC-C2YK-1B/8477-2 and HC-C2YK-1B/8475D-4.
T - No longer available. Order fork unit, P/N 754 826 (B-2457-3), and two (2) blocks, P/N 758 422 (A-2217-4), for replacement.
U - Used with Hartzell Propeller Assemblies HC-C2YK-1B/8477-2, HC-C2YK-1B/8475D-4 and HC-C2YK-1B/8475R-0 if fork unit B-2457-2 has been replaced with fork unit B-2457-3.
V - Used with fork units B-2410, B-2410-1 and B-2457-2 only.
X - Reference latest revision to Piper Service Bulletin 927. Hartzell two blade “compact” aluminum hub propellers need to be inspected for cracks, which typically initiate at the same point on the hub. Also reference latest revision to Piper Service Bulletin 805. Use of multigrade oil is prohibited.

PIPER PARTS CATALOG

Figure and Index Number	Part Number	Code	NOMENCLATURE	No. Req.	SERIAL NUMBERS AFFECTED
84-1	450 936	A,H,X	PROPELLER ASSEMBLY - Hartzell (HC-C2YK-1A/8477-2)	1	32-1 to 32-143 inclusive
	450 937	A,H,X	PROPELLER ASSEMBLY - Hartzell (HC-C2YK-1B/8477-2)	1	32-144 and up
	550 936	A,X	PROPELLER ASSEMBLY - Hartzell (HC-C2YK-1BF/F8477-2	1	
	450 909	B,J,X	PROPELLER ASSEMBLY - Hartzell (HC-C2YK-1B/8475D-4)	1	
	550 937	O,X	PROPELLER ASSEMBLY - Hartzell (HC-C2YK-1BF/F8475D-4)	1	
	550 904	B,K,X	PROPELLER ASSEMBLY - Hartzell (HC-C2YK-1B/8475R-0)	1	
	550 941	B,X	PROPELLER ASSEMBLY - Hartzell (HC-C2YK-1BF/F8475R-0)	1	
-2	752 020	L,X	* HUB ASSEMBLY - Propeller (D-2201-3)	1	
	755 222	M,X	* HUB ASSEMBLY - Propeller (D-2201-17)	1	
-3	753 461		* BOLT - Hex head (A-2431)	6	
-4	758 111		* BOLT - Hex head (A-2432)	4	
-5	407 587		* WASHER - (AN960-616)	10	
-6	752 511		* NUT - Elastic (A20343)	10	
-7	752 534		* NUT - (52NTE-064)	1	
-8	762 678		* “O” RING - Rod (PRP-902-13)	1	
-9	755 800		* “O” RING - Rod (PRP-909-6)	1	
-10	407 569		* WASHER - (AN960-816)	6	
-11	756 295		* STUD - Flange (A-2247-2)	6	
-12	752 533		* NUT - Castle (A-2069)	6	
-13	758 144	C	* BLADE - Propeller (8477-2)	2	
	758 145	D	* BLADE - Propeller (8475D-4)	2	
	758 146	B	* BLADE - Propeller (8475R-0)	2	
	758 218	N	* BLADE - Propeller (F8477-2)	2	
	758 219	F	* BLADE - Propeller (F8475D-4)	2	
	758 220	G	* BLADE - Propeller (F8475R-0)	2	
-14	755 968		* RING - Bearing guide (A-2204)	2	
-15	753 463		* BEARING - Blade, split (A-2202)	2	
-16	755 934		* “O” RING - Blade (PRP-902-42)	2	
-17	757 249		* PRELOAD PLATE UNIT - (B-2256)	2	
-18	757 336	R	* ROD - Piston (A-2418)	1	
	755 992	P	* ROD - Piston (A-2418-1)	1	
	755 993	M	* ROD - Piston (A-2418-2)	1	
-19	754 814	R	* FORK UNIT - Pitch change (B-2410)	1	
	754 815	P	* FORK UNIT - Pitch change (B-2410-1)	1	
	751 820	S,T	* FORK UNIT - Pitch change (B-2457-2)	1	
	754 826	M	* FORK UNIT - Pitch change (B-2457-3)	1	
-20	753 464	V	* BLOCK - Pitch change (A-2217-1)	2	
	753 465	V	* BLOCK - Pitch change (A-2217-2)	2	
	758 204	M	* BLOCK - Pitch change (A-2217-3)	2	
	758 422	U	* BLOCK - Pitch change (A-2217-4)	2	
-21	755 972		* SPLIT - Retainer (A-2430)	1	
-22	756 607		* WEIGHTS - Balance (A-2424)	AR	
-23	757 555	E,P	* SPRING - (A-2213)	1	
	757 556	Q	* SPRING - (A-2213-1)	1	
-24	757 995		* “O” RING - Piston seal (PRP-914-6)	1	
-25	757 302		* PISTON - (B-2418)	1	
-26	752 513		* NUT - Rod (A-2211)	1	
-27	424 061		* COTTER PIN - (AN380-3-5)	1	
-28	755 994		* “O” RING - Piston (PRP-902-51)	1	
-29	757 557		* SEAL - Felt (B-1843)	1	
-30	755 935		* “O” RING (PRP-909-25)	1	

When ordering, always specify Part Number, Description, and Serial Number of Aircraft

Figure and Index Number	Part Number	Code	NOMENCLATURE	No. Req.	SERIAL NUMBERS AFFECTED
64-31	757 827	E,P,W	CYLINDER - (B-2428)	1	
	757 828	Q,W	CYLINDER - (B-2428-1)	1	
-32	757 668	W	SCREW - Low stop (A-2421)	1	
-33	757 559	W	SEAL - Parker (7000-8/8)	1	
-34	768 282	M	BUTTON - Propeller (A-3212-1)	1	
-35	768 280	M	BUSHING - Propeller (A-2413-2)	1	

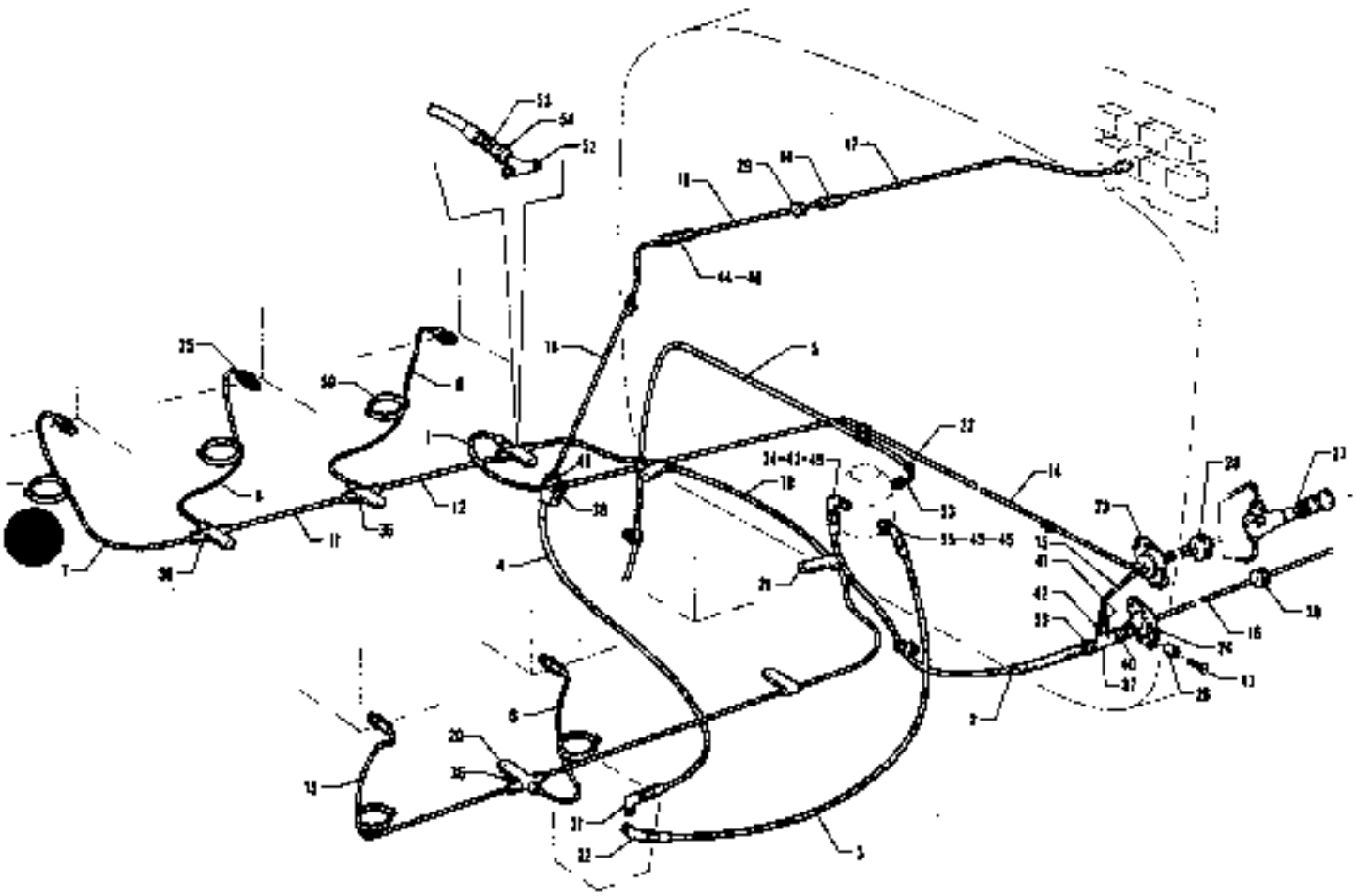

Figure 86. Forward Fuel System Installation
(PA-32-260)

CODE EXPLANATIONS FOR FIGURE 65

A - Used with 1/8" I.D. hose.
B - Used with 3/16" I.D. hose.
W - These parts must be ordered from Service Spares Department, Piper Aircraft, Lock Haven, Penna.

PIPER PARTS CATALOG

Figure and Index Number	Part Number	Code	NOMENCLATURE	No. Req.	SERIAL NUMBERS AFFECTED
85-	88760		DRAWING - Fuel System Installation		32-1 to 32-376 inclusive
	88795		DRAWING - Fuel System Installation		32-376 to 32-853 inclusive
	89170		DRAWING - Fuel System Installation		32-854 to 32-1110 inclusive
	89476		DRAWING - Fuel System Installation		32-1111 and up
-1	17768-08	W	HOSE ASSEMBLY - Primer line connector, 1/8" I.D.	1	
	63801-77		HOSE ASSEMBLY - Primer line connector, 3/16" I.D.	1	
-2	63801-23		HOSE ASSEMBLY - Engine fuel pump	1	
-3	63801-24		HOSE ASSEMBLY - Engine fuel pump	1	
-4	63801-25		HOSE ASSEMBLY - Carburetor to pressure gauge	1	
-5	63813-26		HOSE - Engine fuel pump vent	1	
-6	65364-04		LINE ASSEMBLY - Engine primer, left, center	1	
-7	65364-03		LINE ASSEMBLY - Engine primer, right, front	1	
-8	65364-04		LINE ASSEMBLY - Engine primer, right, center	1	
-9	65364-05		LINE ASSEMBLY - Engine primer, right, rear	1	
-10	65365-02		LINE ASSEMBLY - Engine primer, left	1	
-11	65365-03		LINE ASSEMBLY - Engine primer, right, center	1	
-12	65365-04		LINE ASSEMBLY - Engine primer, right, rear	1	
-13	65366-00		LINE ASSEMBLY - Engine primer, left, front	1	
-14	63824-06		LINE ASSEMBLY - Primer (72")	1	32-1 to 32-1110 inclusive
	63824-12		LINE ASSEMBLY - Primer (100")	1	32-1111 and up
-15	63825-05		LINE ASSEMBLY - Primer (40")	1	32-1 to 32-1110 inclusive
	63825-10		LINE ASSEMBLY - Primer (65")	1	32-1111 and up
-16	65152-16		LINE ASSEMBLY - Engine pump to electric pump	1	32-1 to 32-375 inclusive
	65578-02		LINE ASSEMBLY - Engine pump to electric pump	1	32-376 and up
-17	68773-00		LINE ASSEMBLY - Fuel pressure (35.70")	1	32-1 to 32-1110 inclusive
	67700-51		LINE ASSEMBLY - Fuel pressure (43.35")	1	32-1111 and up
-18	68774-00		LINE ASSEMBLY - Fuel pressure	1	
-19	67700-52		LINE ASSEMBLY - Fuel pressure (21.80")	1	32-1111 and up
-20	65429-00		CLAMP	4	
-21	80032-68	W	CLAMP	3	
-22	454 906	W	CLAMP - (SAE 7)	1	
-23	68769-00		PLATE - Firewall seal	2	
	68770-00		GROMMET - Firewall seal	2	
	68771-00		GASKET - Firewall seal	1	
-24	68769-00		PLATE - Firewall seal	2	
	68770-12		GROMMET - Firewall seal	2	
	22106-07	W	GASKET - Firewall seal	1	
-25	31167-00	W	JET ASSEMBLY - Primer	6	
-26	62732-13		BUSHING - Fitting spacer	1	
-27	461 103		PRIMER ASSEMBLY - (K-2408 SAE 2)	1	
-28	434 129	W	GROMMET - (AN931-6-9)	1	
-29	434 124	W	GROMMET - (AN931-4-12)	1	
-30	434 136	W	GROMMET - (AN931-6-13)	1	
-31	69604-00		ELBOW - Carburetor to pressure gauge (restricted)	1	
-32	458 871	W	ELBOW - (AN823-6)	1	
-33	458 948	W	ELBOW - (1K1-2-4)	1	
-34	458 936	W	ELBOW - (AN833-6)	1	32-1 to 32-7500040 inclusive
	558 830		ELBOW - (RAC 2000-6)	1	32-7500041 and up
-35	458 864		ELBOW - (AN837-6)	1	32-1 to 32-7500040 inclusive
	558 831		ELBOW - (RAC 4500-6)	1	32-7500041 and up

When ordering, always specify Part Number, Description and Serial Number of Aircraft

PIPER PARTS CATALOG

Figure and Index Number	Part Number	Code	NOMENCLATURE	No. Req.	SERIAL NUMBERS AFFECTED
65-36	488 318	W	TEE - Primer lines (AN824-2D)	3	
-37	596 391		TEE - Fuel pump (C3709 x 4)	1	
-38	491 048	A,W	UNION - (AN815-2D)	1	
	484 348	B,W	REDUCER - (AN919-0D)	1	
-39	476 678	W	NIPPLE - (AN816-6)	1	
-40	476 699		NIPPLE - (AN816-7)	1	
-41	490 651	W	CONNECTOR - (NH 200 x 2)	1	
-42	483 680	W	ADAPTER - (AN912-1C)	1	
-43	482 080	W	GASKET - (MS29512-6)	2	32-1 to 32-7600040 Incl.
-44	481 053	W	UNION - (AN832-4)	1	
-45	477 631	W	NUT - (AN924-6)	2	32-1 to 32-7600040 Incl.
-46	477 628	W	NUT - (AN924-4)	1	
-47	416 795	W	SCREW - (AN507-10032R16)	1	
	407 664	W	WASHER - (AN960-10)	1	
	404 887	W	NUT - (MS20365-1032C)	1	
-48	484 307		REDUCER - (AN919-2)	1	
-49	69473-00		CLAMP - Tube	4	32-1111 and up
-50	21230-00	W	CLAMP	5	
-51	491 050	W	UNION - (AN816-4D)	1	32-1111 and up
-52	488 318	A,W	TEE - Primer lines (AN824-2D)	1	
	596 436	B	TEE - Primer lines (MS20825-2D)	1	
-53	476 647	B,W	NIPPLE - (AN816-3D)	1	
-54	466 173	B,W	COUPLING - (AN910-1D)	1	

When ordering, always specify Part Number, Description and Serial Number of Aircraft

2G21 THRU 2G24

INTENTIONALLY LEFT BLANK

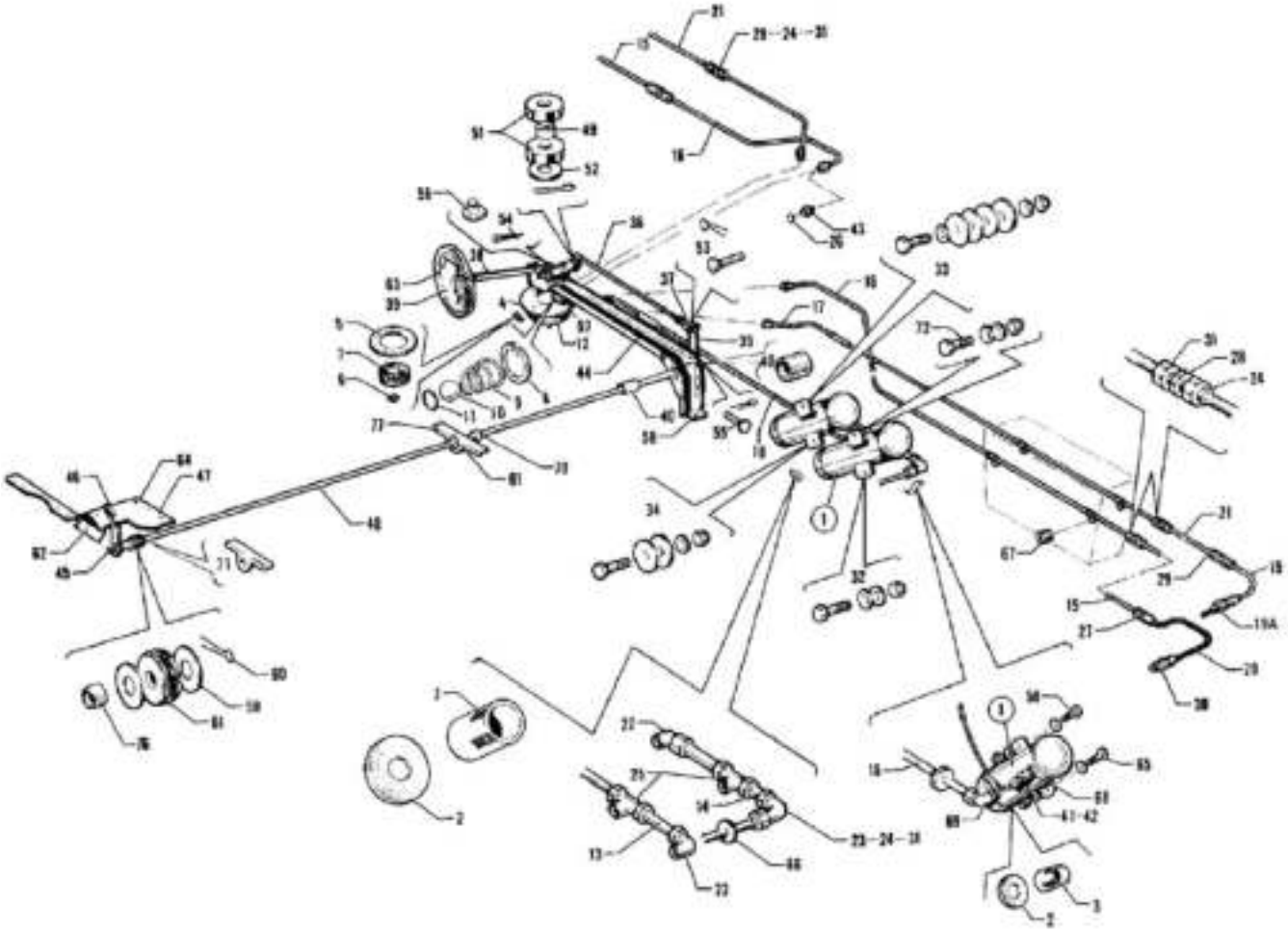

Figure 86. Aft Fuel System Installation
(PA-32-260)

CODE EXPLANATIONS FOR FIGURE 86

A - When ordering, ascertain that Wing Tip Tank Modification Kit 757 152 has been installed per Service Bulletin 253.
B - When ordering, specify color red, blue/green, gold, black, green or “bark II.”
C - Used with Fuel Selector Valve 1H65-2 and 1H65-4 only.
D - Order Part No. 462 061 if Fuel Selector Valve 492 104 (1H26-2) is installed.
E - No longer available. Order part for Serial Nos. 32-876 and up if Fuel Selector Control Modification Kit has been installed per Service Bulletin 376. If Fuel Selector Control Modification Kit has not been installed per Service Bulletin 376, order Kit 760 685.
F - No longer available. Order part for Serial Nos. 32-1251 and up if Fuel Selector Control Modification Kit has been installed per Service Bulletin 376. If Fuel Selector Control Modification Kit has not been installed per Service Bulletin 376, order Kit 760 685 for Serial Nos. 32-1 to 32-875 incl., Kit 760 686 for Serial Nos. 32-876 to 32-1110 incl. or Kit 760 687 for serial Nos.32-1111 to 32-1250 incl.
G - Order Part No. 491 053 if Fuel Selector Valve 492 104 (1H-26-2) is installed.
H - No longer available. Order part for Serial Nos. 32-1111 and up if Fuel Selector Control Modification Kit has been installed per Service Bulletin 376. If Fuel Selector Control Modification Kit has not been installed per Service Bulletin 376, order kit 760 685 for serial Nos. 32-1 to 32-875 incl. or kit 760 685 for serial Nos. 32-876 to 32-1110 incl.
J - Ascertain Fuel Selector Valve Model No. before ordering.
K - Used if Fuel Selector Valve 1H16-1, 1H26-2 or 1H26-3 is installed.
L - Used if Fuel Selector Valve 1H26-4 or 1H26-3 is installed.
M - Ascertain Service Bulletin 376 has been complied with. Appropriate kit must be installed prior to installation of Fuel Valve Kit 760 895 on aircraft serial Nos. 32-1 to 32-7300036 inclusive.
N - Used if Fuel Selector Valve 1H65-2 is installed.
O - Reference latest revision to Piper Service Bulletin 519 for serial numbers 32-7400050 to 32-7600020 inclusive, regardless of whether or not the fuel valve selector has been replaced. There exists a possibility of inter port leakage in the fuel selector valve. P/N 492 262 has been replaced by 492 291.
P - Reference latest revision to Piper Service Bulletin 557. If the line shows evidence of chafing or corrosion from the fuel pump ground strap, replace the line If no chafing or corrosion is present, cover fuel line with plastic tubing and secure with ties.
Q - Must be procured from Parker Hannifin.
R - Refer to the latest Revision to Piper Service Bulletin No. 1198.

PIPER PARTS CATALOG

Figure and Index Number	Part Number	Code	NOMENCLATURE	No. Req.	SERIAL NUMBERS AFFECTED
86-	68760		DRAWING - Fuel System Installation		32-1 to 32-375 inclusive
	68795		DRAWING - Fuel System Installation		32-376 to 32-853 inclusive
	69170		DRAWING - Fuel System Installation		32-854 to 32-1110 inclusive
	69476		DRAWING - Fuel System Installation		32-1111 and up
	68772		DRAWING - Fuel Selector Valve Installation		32-1 to 32-875 inclusive
	69100		DRAWING - Fuel Selector Valve Installation		32-876 to 32-1250
	68084		DRAWING - Fuel Selector Valve Installation		32-1251 and up
-1	481 701		PUMP - Electric, fuel (480 543)	2	32-1 to 32-375 inclusive
	481 701		PUMP - Electric, fuel (480 543)	1	32-376 and up
-2	751 872		* GASKET - Cover (479 136)	1	
-3	751 799		* SCREEN - Filter (479 135)	1	
-4	757 158	M	FUEL VALVE KIT	1	32-1 to 32-150 inclusive
	760 895	M	FUEL VALVE KIT	1	32-151 to 32-7400049 inclusive
	492 290	Q	FUEL VALVE - (1H65-4)	1	32-7400050 and up
	492-291	O	FUEL SELECTOR VALVE - (69735-005)	1	32-7400050 and up
-5	751 871	K,L	* GASKET - Filter	1	
	485 330	N, R	* “O” RING - (MS29513-043)	1	
-6	485 331	R	* “O” RING - (MS29513-009)	1	
-7	751 796	J,K	* FILTER ASSEMBLY - Fuel selector valve	1	
	754 816	J,L,N	* FILTER ASSEMBLY - Fuel selector valve	1	
-8	756 036	L	* RING - Snap, inlet port (N5000-68)	4	
-9	757 632	L	* SPRING - Inlet port	4	
-10	758 176	L	* BALL - Inlet port	4	
-11	756 035	L	* “O” RING - Inlet port	4	
-12	758 534	C	* BOWL - Fuel filter (AI-90-1)	1	
-13	65152-15	P	LINE ASSEMBLY - Fuel, electric pump	2	32-1 to 32-375 inclusive
-14	65152-16	P	LINE ASSEMBLY - Fuel, electric pump	1	32-376 and up
	63882-17	P	SLEEVING	1	32-1 to 32-7700013 inclusive
-15	65152-17		LINE ASSEMBLY - Valve to main tank, left	1	
	65152-21		LINE ASSEMBLY - Valve to main tank, right	1	
-16	68769-00		LINE ASSEMBLY - Valve to main tank, left	1	32-1 to 32-450 inclusive
	69038-00		LINE ASSEMBLY - Valve to main tank, left	1	32-451 and up
	68764-00		LINE ASSEMBLY - Valve to main tank, right	1	
-17	68768-00		LINE ASSEMBLY - Valve to tip tank, left	1	32-1 to 32-450 inclusive
	69039-00`		LINE ASSEMBLY - Valve to tip tank, left	1	32-451 and up
	68765-00		LINE ASSEMBLY - Valve to tip tank, right	1	32-1 to 32-853 inclusive
	68765-02		LINE ASSEMBLY - Valve to tip tank, right	1	32-854 and up
-18	68766-00		LINE ASSEMBLY - Valve to electric pump	1	32-1 to 32-150 inclusive
	68789-00		LINE ASSEMBLY - Valve to electric pump	1	32-151 to 32-375 inclusive
	65577-02		LINE ASSEMBLY - Valve to electric pump	1	32-376 to 32-450 inclusive
	69037-00		LINE ASSEMBLY - Valve to electric pump	1	32-451 and up
-19	69184-00	A	LINE ASSEMBLY - Tip tank	2	32-1 to 32-853 inclusive
-19a	65816-00	A	FITTING - Tip tank line assembly	2	32-1 to 32-853 inclusive
-20	63901-15		HOSE ASSEMBLY - Fuel tank to fuel line	2	
-21	65152-14		LINE ASSEMBLY - Valve to tip tank, left	1	32-1 to 32-853 inclusive
	69166-00		LINE ASSEMBLY - Valve to tip tank, left	1	32-854 and up
	65152-20		LINE ASSEMBLY - Valve to tip tank, right	1	32-1 to 32-853 inclusive
	69166-01		LINE ASSEMBLY - Valve to tip tank, right	1	32-854 and up
-22	68762-00		ELBOW - Electric fuel pump	2	32-1 to 32-375 inclusive
-23	558 916		ELBOW - (8E12-D)	1	32-1 to 32-375 inclusive
-24	460 463		FERRULE - (8T12-D)	9	
-25	68761-00		TEE - Electric fuel pump	2	32-1 to 32-375 inclusive

When ordering, always specify Part Number, Description, and Serial Number of Aircraft

PIPER PARTS CATALOG

Figure and Index Number	Part Number	Code	NOMENCLATURE	No Req	SERIAL NUMBERS AFFECTED
56-26	462 060	D W	GASKET - (MS29512-6)	4	32-1 to 32-150 inclusive
	462 061	W	GASKET - (MS29512-8)	4	32 151 and up
-27	484 359	W	UNION - (AN919-12D)	2	
28	491 084		UNION - (8H12 D)	4	
-29	491 053	W	UNION - (AN815-8D)	2	32-1 to 32-953 inclusive
-30	478 662	W	NIPPLE (ANB16 6D)	2	
31	477 680		NUT - (8B12-D)	9	
-32	400 901	W	BOLT (AN24-11A)	1	32-1 to 32-375 inclusive
	407 566	W	WASHER (AN960-416)	2	32-1 to 32-375 inclusive
	404 888	W	NUT - (MS20365-428C)	1	32-1 to 32-375 inclusive
33	400 441	W	BOLT - (AN3-7A)	1	32-1 to 32-375 inclusive
	407 564	W	WASHER - (AN960-10)	2	32-1 to 32-375 inclusive
	407 560	W	WASHER - (AN970 3)	4	32-1 to 32 375 inclusive
	404 987	W	NUT - (MS20365-1032C)	1	32-1 to 32 375 inclusive
34	400 862		BOLT - (AN23-12A)	1	32-1 to 32-375 inclusive
	407 564	W	WASHER - (AN960-10)	1	32-1 to 32-375 inclusive
	407 560	W	WASHER (AN970-3)	2	32 1 to 32-375 inclusive
	404 987	W	NUT - (MS20365 1032C)	1	32-1 to 32 375 inclusive
35	65392-00	F	ARM ASSEMBLY - Fuel selector control	1	32-1 to 32 875 inclusive
	69092-00	F	ARM ASSEMBLY - Fuel selector control	1	32-876 to 32-1250 inclusive
	69092 02		ARM ASSEMBLY - Fuel selector control	1	32-1251 and up
-36	65407-00	E	ROD ASSEMBLY - Fuel selector control	1	32-1 to 32-875 inclusive
	65407-07		ROD ASSEMBLY - Fuel selector control	1	32-876 and up
-37	464 905	W	* CLEVIS - (RA13-167-2C)	1	
-38	65289-00		HANDLE Quick drain	1	
-39	65461 19	B	COVER ASSEMBLY - Quick drain	1	32 1 and up
	65461-06		COVER ASSEMBLY - Quick drain, blue	1	32-1 to 32 1320 inclusive
	65461-07		COVER ASSEMBLY - Quick drain, brown	1	32-1 to 32-1250 inclusive
	65461 16		COVER ASSEMBLY - Quick drain, white	1	32-1251 to 7600003 inclusive
-40	63904-30		HOSE - Plastic	2	32 876 and up
41	460 463		FERRULE - (8T12-D)	1	32-376 and up
-42	477 680		NUT - (8B12-D)	1	32-376 and up
-43	491 083	G	UNION (8-8HTX D)	4	32-1 to 32-150 inclusive
	491 053	W	UNION - (AN815-8D)	4	32-151 and up
-44	65389-02	F	BRACE ASSEMBLY Fuel selector control	1	32 1 to 32-875 inclusive
	69094-03	F	BRACE ASSEMBLY - Fuel selector control	1	32-876 to 32-1250 inclusive
	69094-04		BRACE ASSEMBLY - Fuel selector control	1	32-1251 and up
-45	65401-00	F	INDICATOR ASSEMBLY - Fuel selector control	1	32 1 to 32-875 inclusive
	69088-00	F	INDICATOR ASSEMBLY - Fuel selector control	1	32-876 to 32-1250 inclusive
	69088-06		INDICATOR ASSEMBLY - Fuel selector control	1	32-1251 and up
-46	571 056		* KNOB - (214)	1	32-1 to 32-879 inclusive
	69181-00		* KNOB	1	32-880 and up
47	65409-00	H	PLATE - Tunnel	1	32 1 to 32-875 inclusive
	69085-00	H	PLATE - Tunnel	1	32 876 to 32-1110 inclusive
	69489-00		PLATE - Tunnel	1	32-1111 and up
-48	65396-00	F	TORQUE TUBE - Fuel selector control	1	32-1 to 32-875 inclusive
	69093-00	F	TORQUE TUBE Fuel selector control	1	32-876 to 32-1250 inclusive
	69093-02		TORQUE TUBE - Fuel selector control	1	32 1251 and up
49	63900-133		BUSHING - Rod assembly	1	
-50	400 002	W	BOLT (AN4-5A)	1	
	407 565	W	WASHER - (AN960-416)	2	
	404 936	W	NUT - (MS20364-428C)	1	
51	62633-11		WASHER - Rod assembly	2	
-52	407 564	W	WASHER - (NA960-10L)	1	
	424 051	W	COTTER PIN - (AN380-2-2)	1	

When ordering, always specify Part Number, Description and Serial Number of Aircraft

PIPER PARTS CATALOG

Figure and Index Number	Part Number	Code	NOMENCLATURE	No. Req.	SERIAL NUMBERS AFFECTED
86-53	424 175		PIN - (AN393-13)	1	
	424 051		COTTER PIN - (AN380-2-2)	1	
-54	424 058		COTTER PIN - (MS24665-281)	1	
-55	424 145		PIN - (AN392-17)	2	32-1 to 32-875 inclusive
	424 147		PIN - (AN392-21)	2	32-876 to 32-1250 inclusive
	410 046		SCREW - (MS24694-S59)	2	32-1251 and up
	407 564		WASHER - (AN960-10)	2	32-1251 and up
	404 887		NUT - (MS20365-1032C)	2	32-1251 and up
-56	62833-63		WASHER - Fuel selector valve stem	1	
-57	415 754		SCREW - (AN515-8R8)	4	
	407 563		WASHER - (AN960-8)	4	
-58	411 532		SCREW - (MS35207-263)	1	
	407 564		WASHER - (AN960-10)	1	
-59	407 567		WASHER - (AN960-616)	2	32-1 to 32-875 inclusive
	407 570		WASHER - (AN960-916)	2	32-876 and up
-60	424 052		COTTER PIN - (AN380-2-3)	1	32-1 to 32-875 inclusive
	424 053		COTTER PIN - (AN380-2-4)	1	32-876 and up
-61	434 130		GROMMET - (AN931-7-11)	2	32-1 to 32-875 inclusive
	63976-23		GROMMET - Caterpillar	2	32-876 and up
-62	415 261		SCREW - (8-32 x 3/4") Oval, chrome	6	
-63	415 264		SCREW - (8-32 x 1 1/8") Oval, chrome	2	
	494 004		WASHER - (8) Chrome	2	
-64	419 920		SCREW - (8 x 1/2") Chrome	7	
	406 382		NUT - (A1789-8-3)	7	
-65	400 002		BOLT - (AN4-5A)	1	32-376 and up
	407 565		WASHER - (AN960-416)	2	32-376 and up
	404 836		NUT - (MS20364-428C)	1	32-376 and up
-66	463 401		GROMMET - (2426)	2	
-67	63900-39		BUSHING - Fuel line spacer	4	
-68	476 690		NIPPLE - (8-4G12-D)	1	32-376 and up
-69	558-917		ELBOW - (8-4D12-D)	1	32-376 and up
-70	63904-22		HOSE - Plastic	2	32-876 and up
-71	65400-00	E	ANGLE - Fuel selector control	2	32-1 to 32-875 inclusive
	65400-02		ANGLE - Fuel selector control	2	32-876 and up

When ordering, always specify Part Number, Description, and Serial Number of Aircraft

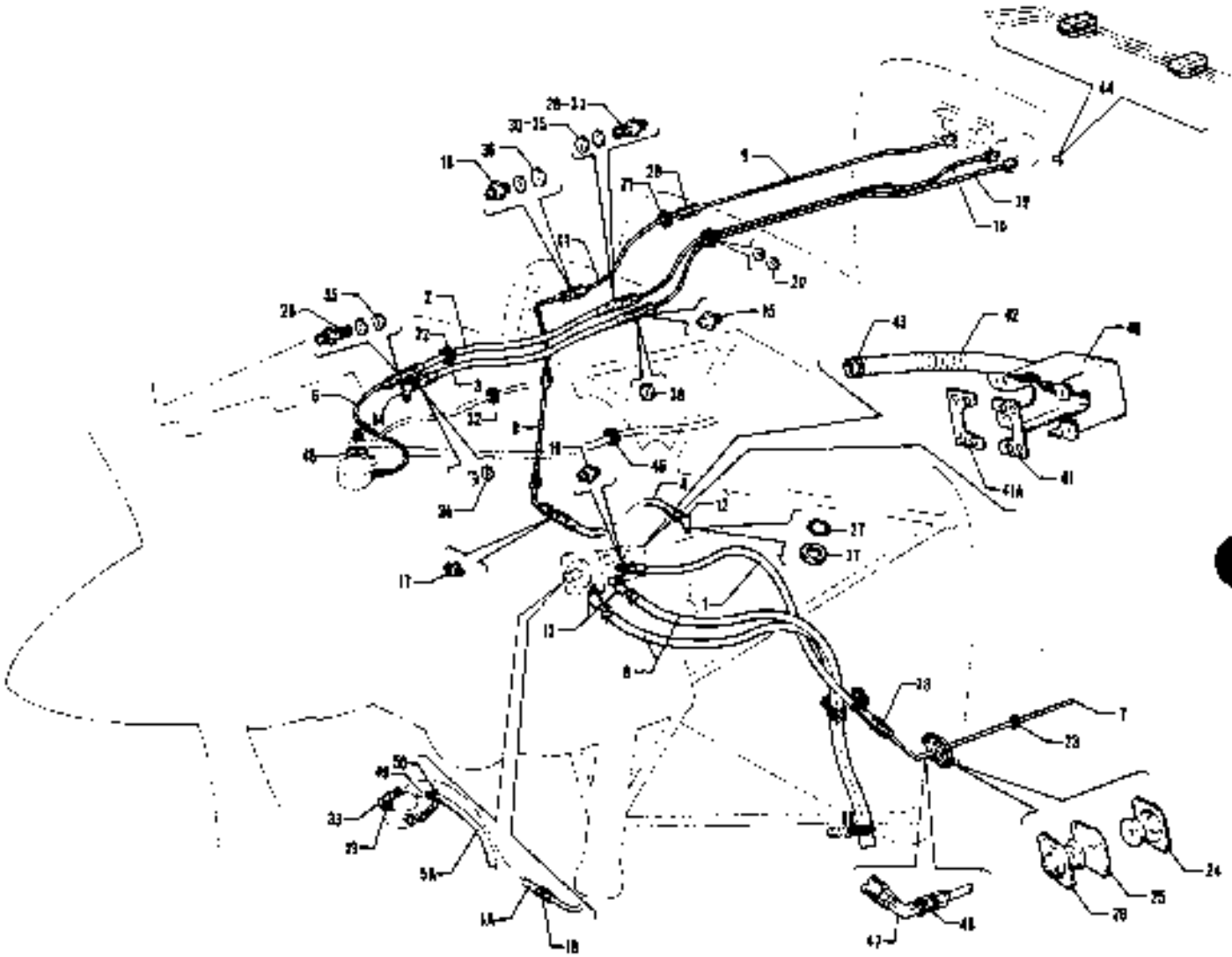

Figure 87 Forward Fuel System Installation
(PA-32-300 and PA-32R-300)

CODE EXPLANATIONS FOR FIGURE 87

A - Used on PA-32-300 only
B - Used on PA-32R-300 only
C - Used on PA-32-300 with serial numbers 32-40000 to 32-7640065 incl., 32-7640067 to 32-7640071 incl., and PA-32R-300 with serial numbers 32R-7680001 to 32R-7680140 incl
D - Used on PA-32-300 with serial numbers 32-7640066, 32-7640072 and up, and PA-32R-300 with serial numbers 32-7680141 and up
E - Used on PA-32-300 with serial numbers 32-40348 to 32-7640066 incl., 32-7640067 to 32-32-7640071 incl., and PA-32R-300 with serial numbers 32R-7680001 to 32R-7680140 incl
F - Used on PA-32-300 with serial numbers 32-7640001 and up, and PA-32R-300 with serial numbers 32R-7680001 and up
G - Used on PA-32-300 with serial numbers 32-40566 and up, and PA-32R-300 with serial numbers 32R-7680001 and up
H - Used on PA-32-300 with serial numbers 32-40616 and up, and PA-32R-300 with serial numbers 32R-7680001 and up
J - Used on PA-32-300 with serial numbers 32-40000 to 32-7940146 inclusive, and PA-32R-300 with serial numbers 32R-7650001 and up
K - Used on PA-32-300 with serial numbers 32-40566 to 32-7940146 inclusive, and PA-32R-300 with serial numbers 32R-7690001 and up
W - These parts must be ordered from Service Spares Department, Piper Aircraft, Lock Haven, Penna

PIPER PARTS CATALOG

Figure and Index Number	Part Number	Code	NOMENCLATURE	No. Req.	SERIAL NUMBERS AFFECTED
87-	88058	A	DRAWING - Fuel System Installation		32-40000 to 32-40153 inclusive
	89171	A	DRAWING - Fuel System Installation		32-40154 to 32-40565 inclusive
	89477	A	DRAWING - Fuel System Installation		32-40566 to 32-7840222 incl
	38117	B	DRAWING - Fuel System Installation		
	38478	A	DRAWING - Fuel System Installation		32-7940001 and up
-1	63901-42	C	HOSE ASSEMBLY - Engine fuel pump	1	
-1a	63901-24	D	HOSE ASSEMBLY - Engine fuel pump	1	
-2	63901-32	A	HOSE ASSEMBLY - Fuel flow gauge (11 1/2")	1	32-40000 to 32-40515 inclusive
	63901-40	H	HOSE ASSEMBLY - Fuel flow gauge (24 1/2")	1	
-3	63901-33		HOSE ASSEMBLY - Vent,fuel flow gauge	1	
-4	63901-38	J	HOSE ASSEMBLY - Fuel pressure gauge	1	
-5	69015-04	C	HOSE - Engine fuel pump	2	
-5a	69015-04	D	HOSE - Engine fuel pump	1	
-6	68036-00	A	LINE ASSEMBLY - Fuel flow divider	1	32-40000 to 32-40515 inclusive
-7	69013-00	A	LINE ASSEMBLY - Engine pump to electric pump (84 25")	1	32-40000 to 32-7540198 incl
	69013-09	A	LINE ASSEMBLY - Engine pump to electric pump (84 25")	1	32-7640001 to 32-7840222 incl
	67700-120	F	LINE ASSEMBLY - Engine pump to electric pump (48 50")	1	
-8	68044-00	J	TUBE ASSEMBLY - Fuel pressure gauge	1	
-9	68773-00	A	TUBE ASSEMBLY - Fuel pressure gauge (35 70")	1	32-40000 to 32-40565 inclusive
	67700-51	K	TUBE ASSEMBLY - Fuel pressure gauge (43 35")	1	
-10	65152-22	A	TUBE ASSEMBLY - Fuel flow pressure	1	32-40000 to 32-40565 inclusive
	67700-46	G	TUBE ASSEMBLY - Fuel flow pressure	1	
-11	67700-52	K	TUBE ASSEMBLY - Fuel pressure gauge (21 60")	1	
-12	69033-00	J	ELBOW - Restricted, 90 degrees	1	
	583 228	A	PLUG - (MS9123123)	1	32-7940147 and up
-13	458 940	C,W	ELBOW - (AN844-4D)	2	
-14	458 678	W	ELBOW - (AN833-2D)	1	
-15	491 084	W	UNION - (AN832-2)	1	
-16	491 083	J,W	UNION - (AN832-4)	1	
-17	491 055	J,W	UNION - (AN815-4)	1	
-18	491 056	A,W	UNION - (AN815-6)	1	32-40000 to 32-7840222 incl
-19	478 678	W	NIPPLE - (AN818-8)	1	
-20	69021-00	A	GROMMET	1	32-40000 to 32-40565 inclusive
	434 119	G	GROMMET - (MS35489-25)	2	
-21	434 124	A,W	GROMMET - (MS35489-7)	1	32-40000 to 32-40565 inclusive
	434 155	K,W	GROMMET - (MS35489-7S)	1	
-22	434 172	W	GROMMET - (MS35489-19S)	1	
-23	434 156	W	GROMMET - (MS35489-14S)	1	
-24	68770-04	A	GROMMET - Firewall seal	2	32-40000 to 32-7840222 incl
-25	68771-04	A	GASKET - Firewall seal	1	32-40000 to 32-7840222 incl
-26	66789-00	A	PLATE - Firewall seal grommet	2	32-40000 to 32-7840222 incl
-27	462 058	W	"O" RING - (MS29512-4)	1	32-40000 to 32-7840222 incl
-28	23319-00	W	UNION	2	32-40000 to 32-40515 inclusive
-29	491 050	A,W	UNION - (AN815-4D)	1	32-40566 to 32-7940146 incl
-30	477 628	W	NUT - (AN924-3)	1	32-40516 and up
	407 567	W	WASHER - (AN960-616)	1	32-40516 and up
-31	23319-00	W	UNION	1	32-40516 and up
-32	434 169	W	GROMMET - (MS35489-15S)	1	
-33	568 930	D	ELBOW - (RA-2000C-5)	1	
-34	477 619	W	NUT - (AN924-2D)	1	
	407 566	W	WASHER - (AN960-516)	1	
-35	477 628	W	NUT - (AN924-3)	2	32-40000 to 32-40515 inclusive
	407 567	W	WASHER - (AN960-616)	2	32-40000 to 32-40515 inclusive
-36	477 629	J,W	NUT - (AN924-4)	1	
	407 567	J,W	WASHER - (AN960-616)	1	

When ordering, always specify Part Number, Description and Serial Number of Aircraft

PIPER PARTS CATALOG

Figure and Index Number	Part Number	Code	NOMENCLATURE	No. Req.	SERIAL NUMBERS AFFECTED
B7-37	477 629	J,W	NUT - (AN924-4)	1	
38	477 627	W	NUT - (AN924-2)	1	
-39	65152-23	A	TUBE ASSEMBLY - Fuel flow vent	1	32-40000 to 32-40565 inclusive
	67700-47	G	TUBE ASSEMBLY - Fuel flow vent	1	
-40	69201-00	A	SHROUD ASSEMBLY - Fuel pump	1	32-40348 to 32-7640065 incl, 32-7640067 to 32-7640071 incl
	38171-06	B	SHROUD ASSEMBLY - Fuel pump	1	32-7680001 to 32-7680140 incl
-41	69198-00	E	SUPPORT - Fuel pump shroud, left	1	
-41a	69196-00	A	SUPPORT - Fuel pump shroud, right	1	32-40348 to 32-7640065 incl, 32-7640067 to 32-7640071 incl
	69198-02	B	SUPPORT - Fuel pump shroud, right	1	32-7680001 to 32-7680140 incl
-42	63633-53	E	HOSE - Fuel pump shroud to baffle	1	
-43	454 837	E	CLAMP - Fuel pump shroud hose (H-78000)	2	
-44	69473-00	A	CLAMP - Tube	4	32-40586 and up
-45	69464-00	A	ELBOW - Restricted, 90 degrees	1	32-40566 and up
-46	434 172	A,W	GROMMET - (M535469-19S)	1	32-40566 and up
-47	458 936	W	ELBOW - (AN833-6)	1	
48	477 631	B,W	NUT - (AN924-6)	1	
	407 570	B,W	WASHER - (AN960-916)	1	
-49	458 940	A,W	ELBOW - (AN844-4D)	1	32-7940001 and up
-50	464 983	A,W	CLAMP - (SAE TYPE-8)	1	32-7940001 and up

When ordering, always specify Part Number, Description and Serial Number of Aircraft

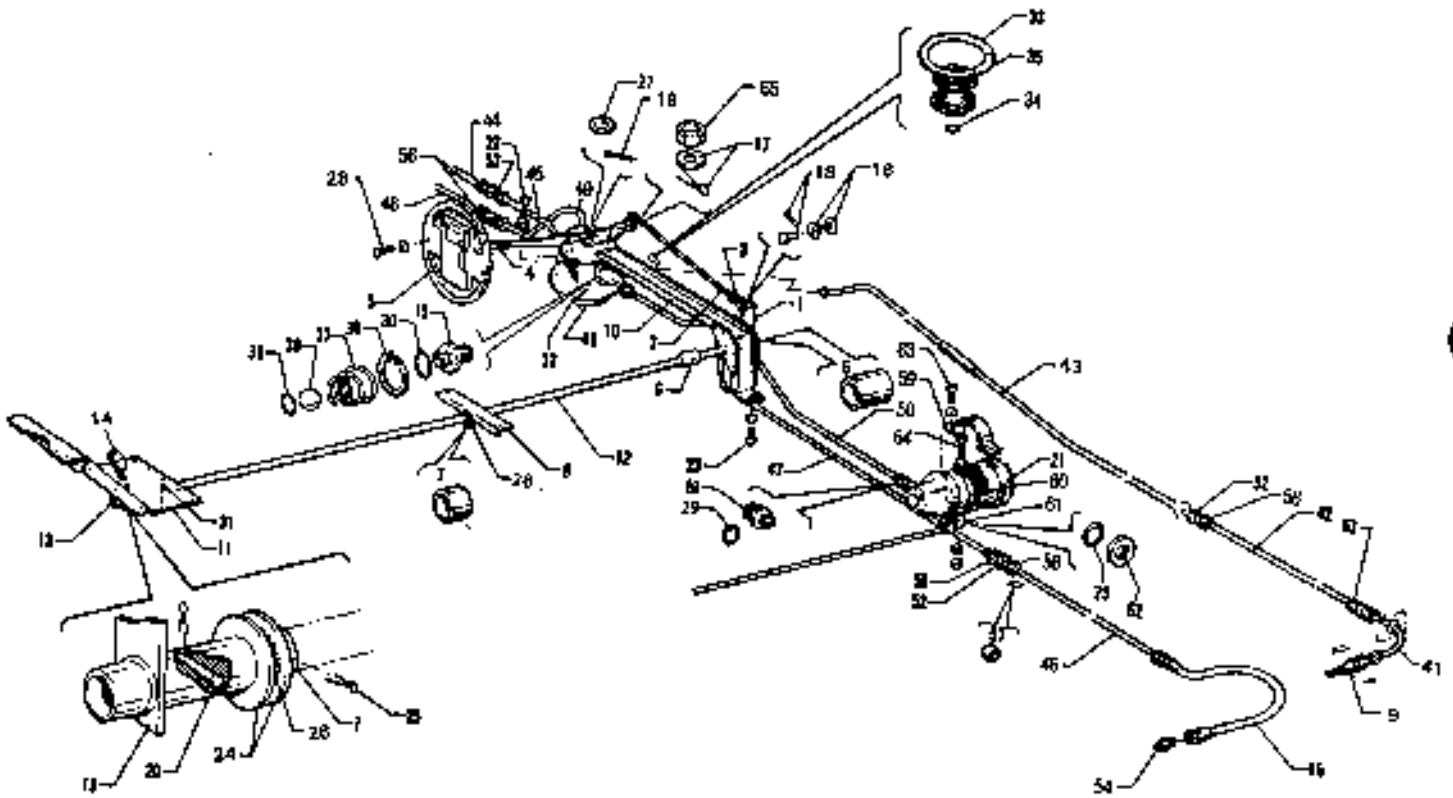

Figure 88 Aft Fuel System Installation
(PA-32-300 - Serial Nos 32-40000 to 32-7840222 inclusive)

CODE EXPLANATIONS FOR FIGURE 88

A - No longer available. Order part for Serial Nos. 32-40851 and up if Fuel Selector Control Modification Kit has been installed per Service Bulletin 376. If Fuel Selector Control Modification Kit has not been installed per Service Bulletin 376, order Kit 760 686 for Serial Nos. 32-1 to 32-40565 incl. or kit 760 687 for Serial Nos. 32-40566 to 32-40850 incl.
B - No longer available. Order part for Serial Nos. 32-40566 and up if Fuel Selector Control Modification Kit has been installed per Service Bulletin 376. If Fuel Selector Control Modification Kit has not been installed per Service Bulletin 376 order Kit 760 686.
C - When ordering, ascertain that Wing Tip Tank Modification Kit 757 152 has been installed per Service Bulletin 253.
D - Used if Fuel Selector Valve 1H26-2 or 1H26-3 is installed.
E - Used if Fuel Selector Valve 1H26-4 or 1H26-5 is installed.
F - Used if Fuel Selector Valve 1H65-2 or 1H65-4 is installed.
G - Ascertain Service Bulletin 376 has been compiled with. Appropriate kit must be installed prior to installation of Fuel Valve Kit 760 895 on aircraft with serial numbers 32-40000 to 32-7340081 inclusive.
H - When ordering, specify color red, blue/green, gold, black, green or “bark II.”
J - Reference latest revision to Piper Service Bulletin 519 for serial numbers 32-7440161 to 32-7640109 inclusive, regardless of whether or not the fuel valve selector has been replaced. There exists a possibility of inter port leakage in the fuel selector valve. P/N 492 262 has been replaced by P/N 492-291.
K - Must be procured from Parker Hannifin.
L - Refer to the latest revision of Piper Service Bulletin No. 1198.

PIPER PARTS CATALOG

Figure and Index Number	Part Number	Code	NOMENCLATURE	No Req	SERIAL NUMBERS AFFECTED
88-	68056		DRAWING - Fuel System Installation		32-40000 to 32-40153 inclusive
	68171		DRAWING - Fuel System Installation		32-40154 to 32-40565 inclusive
	69477		DRAWING - Fuel System Installation		32-40566 and up
	69100		DRAWING - Fuel Selector Valve Installation		32-40000 to 32-40850 inclusive
	68084		DRAWING - Fuel Selector Valve Installation		32-40851 and up
-1	69092-00	A	ARM ASSEMBLY - Fuel selector control	1	32-40000 to 32-40850 inclusive
	69092-02		ARM ASSEMBLY - Fuel selector control	1	32-40851 and up
-2	65407-07		ROD ASSEMBLY - Fuel selector control	1	
-3	454 905	W	* CLEVIS (RA13-167-2C)	1	
-4	66289-00		HANDLE - Quick drain	1	
-5	65461-19	H	COVER ASSEMBLY - Quick drain	1	32-40000 and up
	65461-06		COVER ASSEMBLY - Quick drain, blue	1	32-40000 to 32-41018 inclusive
	65461-07		COVER ASSEMBLY - Quick drain, brown	1	32-40000 to 32-40850 inclusive
	65461-15		COVER ASSEMBLY - Quick drain, white	1	32-40851 to 32-7640142 inclusive
-6	63904-30		HOSE - Plastic	2	
-7	63904-22		HOSE - Plastic	2	
-8	65400-02		ANGLE - Fuel selector control	1	
-9	65816-00	C	FITTING - Tip tank tube assembly	2	32-40000 to 32-40153 inclusive
-10	69094-03	A	BRACE ASSEMBLY - Fuel selector control	1	32-40000 to 32-40850 inclusive
	69094-04		BRACE ASSEMBLY - Fuel selector control	1	32-40851 and up
-11	69095-00	B	PLATE - Tunnel	1	32-40000 to 32-40565 inclusive
	69489-00		PLATE - Tunnel	1	32-40566 and up
-12	68093-00	A	TUBE - Torque fuel selector control	1	32-40000 to 32-40850 inclusive
	69093-02		TUBE - Torque fuel selector control	1	32-40851 and up
13	69088-00	A	LEVER ASSEMBLY - Fuel selector control	1	32-40000 to 32-40850 inclusive
	69088-05		LEVER ASSEMBLY - Fuel selector control	1	32-40851 and up
-14	69181-00		* KNOB	1	
15	491 053	W	UNION (AN815-8D)	4	
-16	62833-11		WASHER - Rod assembly	2	
-17	407 584	W	WASHER - (AN960-10L)	1	
	424 051	W	COTTER PIN - (AN380-2-2)	1	
-18	424 175	W	PIN - (AN393-13)	1	
	424 051	W	COTTER PIN (AN380-2-2)	1	
-19	424 158		COTTER PIN - (MS24665-281)	1	
-20	424 147	A W	PIN (AN392-21)	2	32-40000 to 32-40850 inclusive
	424 051	A W	COTTER PIN - (AN380-2-2)	2	32-40000 to 32-40850 inclusive
	410 048	W	SCREW - (MS24694-S59)	2	32-40851 and up
	407 564	W	WASHER (AN960-10)	2	32-40851 and up
	404 887	W	NUT - (MS20365-1032C)	2	32-40851 and up
-21	481 708		PUMP - Electric fuel (185-6)	1	
-22	415 974	W	SCREW - (AN515-8R6)	4	
	407 563	W	WASHER - (AN960-8)	4	
23	411 632		SCREW (MS35207-263)	1	
	407 564	W	WASHER - (AN960-10)	1	
24	407 570	W	WASHER - (AN960-916)	2	
25	424 053	W	COTTER PIN - (AN380-2-4)	1	
-26	63976-23		GROMMET	2	
27	62833-36		WASHER - Fuel selector valve stem	1	
28	415 265		SCREW - (8-32 x 1 1/8 L)	2	
	494 004	W	WASHER - (8 Finish) Nickel finish	2	
-29	462 060	W	"O" RING (MS29512-6)	2	
-30	462 061	W	"O" RING - (MS29512-8)	4	
31	419 923		SCREW - (8 x 1/2 LI Type "B"	2	

When ordering always specify Part Number, Description and Serial Number of Aircraft

PIPER PARTS CATALOG

Figure and Index Number	Part Number	Code	NOMENCLATURE	No. Req.	SERIAL NUMBERS AFFECTED
88-32	760 895	G	FUEL VALVE KIT	1	32-40000 to 32-7440160 incl.
	492-290	K	FUEL VALVE KIT - (1-H65-4) (69735-04)	1	32-7440161 and up
	492-291	J	FUEL SELECTOR VALVE	1	32-7440161 and up
-33	751 871	D,E	* GASKET - Filter	1	
	485 330	F,L	* "O" RING - (MS29513-043)	1	
-34	485 331	L	* "O" RING - (MS29513-009)	1	
-35	751 796	D	* FILTER ASSEMBLY - Fuel selector valve	1	
	754 816	E,F	* FILTER ASSEMBLY - Fuel selector valve	1	
-36	756 036	E	* RING - Snap, inlet port (N-5000-68)	4	
-37	757 632	E	* SPRING - Inlet port	4	
-38	758 176	E	* BALL - Inlet port	4	
-39	756 035	E	* "O" RING - Inlet port	4	
-40	565 146		HOSE ASSEMBLY - Main tank to fuel line (63901-15)	2	
-41	69184-00	C	TUBE ASSEMBLY - Tip tank	2	32-40000 to 32-40153 inclusive
-42	65152-14		TUBE ASSEMBLY - Left tip tank fuel line	1	32-40000 to 32-40153 inclusive
	69166-00		TUBE ASSEMBLY - Left tip tank fuel line	1	32-40154 and up
-43	69039-00		TUBE ASSEMBLY - Fuel selector, left tip tank line	1	
-44	65152-20		TUBE ASSEMBLY - Right tip tank fuel line	1	32-40000 to 32-40153 inclusive
	69166-01		TUBE ASSEMBLY - Right tip tank fuel line	1	32-40154 and up
-45	68765-00		TUBE ASSEMBLY - Fuel selector, right tip tank line	1	32-40000 to 32-40153 inclusive
	68765-02		TUBE ASSEMBLY - Fuel selector, right tip tank line	1	32-40154 and up
-46	68152-17		TUBE ASSEMBLY - Left main tank fuel line	1	
-47	69038-00		TUBE ASSEMBLY - Fuel selector, left main tank line	1	
-48	65152-21		TUBE ASSEMBLY - Right main tank fuel line	1	
-49	68764-00		TUBE ASSEMBLY - Fuel selector, right main tank line	1	
-50	69049-00		TUBE ASSEMBLY - Fuel selector to electric fuel pump	1	
-51	484 359		REDUCER - (AN919-12D)	3	
-52	491 084		UNION - (8H12-D)	4	
-53	491 053		UNION - (AN815-8D)	2	32-40000 to 32-40153 inclusive
-54	476 662		NIPPLE - (AN816-6D)	2	
-55	463 403		GROMMET - (SB-687-9)	23	
-56	463 401		GROMMET - (2426)	3	
-57	460 463		FERRULE - (8T12-D)	8	
-58	477 680		NUT - (8B12-D)	8	
-59	69032-00		STRAP - Electric fuel pump	2	
-60	63078-11		DISC - 1/16 Sheet neoprene	1	
-61	458 901		ELBOW - (AN833-6D)	1	
-62	477 620		NUT - (AN924-6D)	1	
-63	416 995		SCREW - (AN526-1032R8)	2	
	407 564		WASHER - (AN960-10)	4	
	404 887		NUT - (MS20365-1032C)	2	
-64	416 997		SCREW - (AN526-1032R12)	2	
	407 564		WASHER - (AN960-10)	4	
	404 887		NUT - (MS20365-1032C)	2	
-65	63900-133		BUSHING - Rod assembly	1	
-66	63901-15		HOSE ASSEMBLY - Main tank to fuel line	2	

When ordering, always specify Part Number, Description, and Serial Number of Aircraft

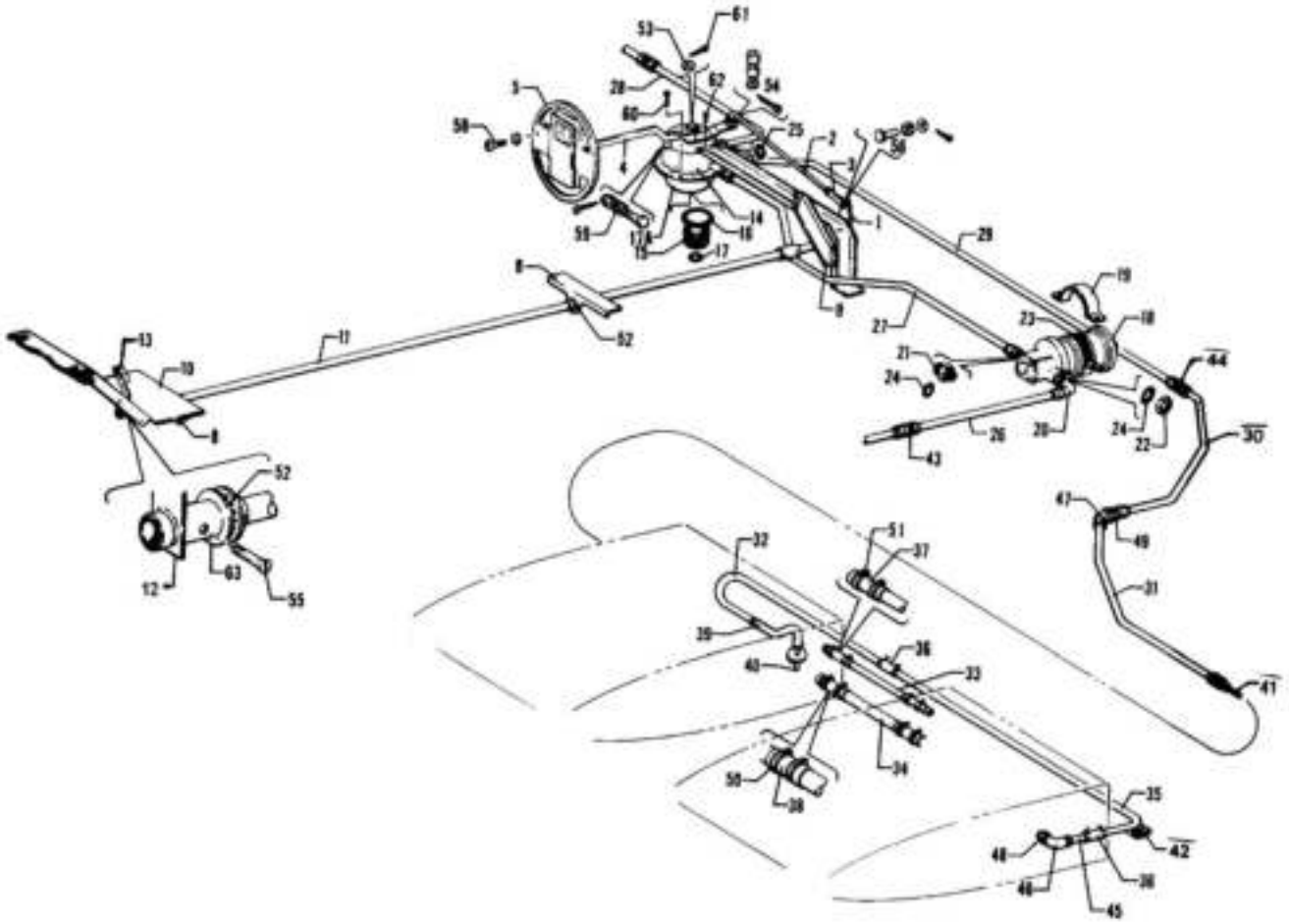

Figure 89. Aft Fuel System Installation
(PA-32-300 - Serial Nos. 32-7940001 and up)
(PA-32R-300 - Serial Nos. 32R-7680001 and up)

CODE EXPLANATIONS FOR FIGURE 89

A - Used on PA-32-300 with serial numbers 32-7940001 and up, and PA-32R-300 with serial numbers 32R-7680001 and up.
B - Used on PA-32-300 only.
C - Used on PA-32R-300 only.
D - When ordering, specify color “bark II” or black.
E - Used on PA-32-300 with serial numbers 32-7940001 to 32-7940157 incl., and PA-32R-300.
F - Reference latest revision to Piper Service Bulletin 503. Inspect P/N 67700-96 for damage.The possibility exists of screws penetrating the fuel lines and causing fuel leakage.
G - Reference latest revision to Piper Service Bulletin 772. Cameron 1-H65-3 Fuel Selector Valves (Piper Part No. 69735-05) may exhibit excessive freeplay between the valve shaft and arm. If the part’s identification tag shows a manufactured date code of 4J, 5J, 6J, or 7J, the valve must be replaced.
H - Refer to the Latest Revision of Piper Service Bulletin No. 1198.

PIPER PARTS CATALOG

Figure and Index Number	Part Number	Code	NOMENCLATURE	No. Req.	SERIAL NUMBERS AFFECTED
89-	38478	B	DRAWING - Fuel System Installation		
	38177	C	DRAWING - Fuel System Installation		
	38142		DRAWING - Fuel Selector Valve Installation		
-1	69092-02		ARM ASSEMBLY - Fuel selector control	1	
-2	65407-07		ROD ASSEMBLY - Fuel selector control	1	
-3	454 905		* CLEVIS - (RA12-187-2C)	1	
-4	38154-00		HANDLE - Quick drain	1	
-5	65461-19	D	COVER ASSEMBLY - Quick drain	1	
-6	--- ---		DELETED		
-7	--- ---		DELETED		
-8	65400-02		ANGLE - Fuel selector control	2	
-9	69094-04		BRACE ASSEMBLY - Fuel selector control	1	
-10	69489-02	B	PLATE - Tunnel	1	
	69489-00	C	PLATE - Tunnel	1	
-11	69093-03		TUBE - Torque, fuel selector control	1	
-12	69088-05		LEVER ASSEMBLY - Fuel selector control	1	
-13	69181-00		* KNOB	1	
-14	69735-05	G	VALVE ASSEMBLY - Fuel selector (492 291) (Shaw Aero Devices)	1	
-15	754 816		* FILTER ASSEMBLY - Fuel selector valve	1	
-16	485 330	H	* RING - “O” (MS29513-043)	1	
-17	485 331	H	* RING - “O” (MS29513-009)	1	
-17a	758 534		* BOWL - Fuel filter (A1-90-1)	1	
-18	481 708		PUMP - Electric fuel (1B5-6)	1	
-19	69032-00		STRAP - Electric fuel pump	2	
-20	458 901		ELBOW - (AN833-6D)	1	
-21	484 359		REDUCER - (AN919-12D)	1	
-22	477 620		NUT - (AN924-6D)	1	
-23	189 732		TAPE - (1/8 x 1) 9”	1	
-24	462 060		RING - “O” (MS29512-06)	2	
-25	462 061		RING - “O” (MS29512-08)	2	
-26	67700-121		TUBE ASSEMBLY - Electric fuel pump	1	
-27	67700-101		TUBE ASSEMBLY - Pump to fuel valve	1	
-28	67700-100		TUBE ASSEMBLY - Fuel selector valve	1	
-29	67700-98	E	TUBE ASSEMBLY - Fuel selector valve	1	
	67700-339	B	TUBE ASSEMBLY - Fuel selector valve	1	32-7940158 and up
-30	6770-96	F	TUBE ASSEMBLY - Fuel selector to inboard fuel tank	2	
-31	67700-104		TUBE ASSEMBLY - Inboard fuel tank	2	
-32	67700-122		TUBE ASSEMBLY - Fuel vent	2	
-33	38123-00		TUBE ASSEMBLY - Interconnect ground (3/4” diameter)	2	
-34	38123-02		TUBE ASSEMBLY - Interconnect ground (2” diameter)	2	
-35	95153-29		TUBE - Outboard fuel tank	2	
-36	69015-41		HOSE - Connector	4	
-37	63913-93		HOSE - Connector	4	
-38	63913-92		HOSE - Connector	4	
-39	69015-42		HOSE - Fuel vent	2	
-40	38128-00		VENT ASSEMBLY - Fuel	2	
-41	68763-00		STRAINER ASSEMBLY - Fuel	2	
-42	63186-03		MOULDING - Extruded	4	
-43	491 052		UNION - (AN815-6D)	1	
-44	491 053		UNION - (AN815-8D)	4	
-45	451 857		ADAPTER - (AN840-4D)	2	
-46	458 904		ELBOW - (AN914-1D)	2	
-47	458 914		ELBOW - (AN837-8D)	2	
-48	453 616		REDUCER - (AN912-1D)	2	
-49	477 621		NUT - (AN924-8D)	2	
	407 573		WASHER - (AN960-1216)	2	

When ordering, always specify Part Number, Description, and Serial Number of Aircraft

PIPER PARTS CATALOG

Figure and Index Number	Part Number	Code	NOMENCLATURE	No. Req.	SERIAL NUMBERS AFFECTED
89-50	554 984		CLAMP - (SAE TY F-36)	8	
-51	554 797		CLAMP - (SAE TY F-12)	8	
-52	63976-23		GROMMET	2	
-53	62833-36		WASHER - Fuel selector valve stem	1	
-54	62833-11		WASHER - Rod assembly	2	
	407 584		WASHER - (AN960-10L)	1	
	424 051		COTTER PIN - (MS24665-132)	1	
-55	410 046		SCREW - (MS24694-S59)	2	
	407 564		WASHER - (AN960-10)	2	
	404 887		NUT - (MS20365-1032C)	2	
-56	424 175		PIN - (MS20392-2C13)	1	
	424 051		COTTER PIN - (MS24665-132)	1	
-58	415 267		SCREW - (8-32 x 1 1/2L)	2	
	494 004		WASHER - (PS10016-8)	2	
-59	400 053		BOLT - (AN3-6)	1	
	407 584		WASHER - (AN960-10L)	2	
	404 392		NUT - (AN320-3)	1	
	424 050		COTTER PIN - (MS24665-134)	1	
-60	416 098		SCREW - (MS35265-45)	4	
-61	424 058		COTTER PIN - (MS24665-281)	1	
-62	416 098		SCREW - (MS35265-45)	2	
	407 563		WASHER - (AN960-8)	2	
	404 910		NUT - (MS20365-832C)	2	
-63	407 570		WASHER - (AN960-916)	2	

When ordering, always specify Part Number, Description, and Serial Number of Aircraft

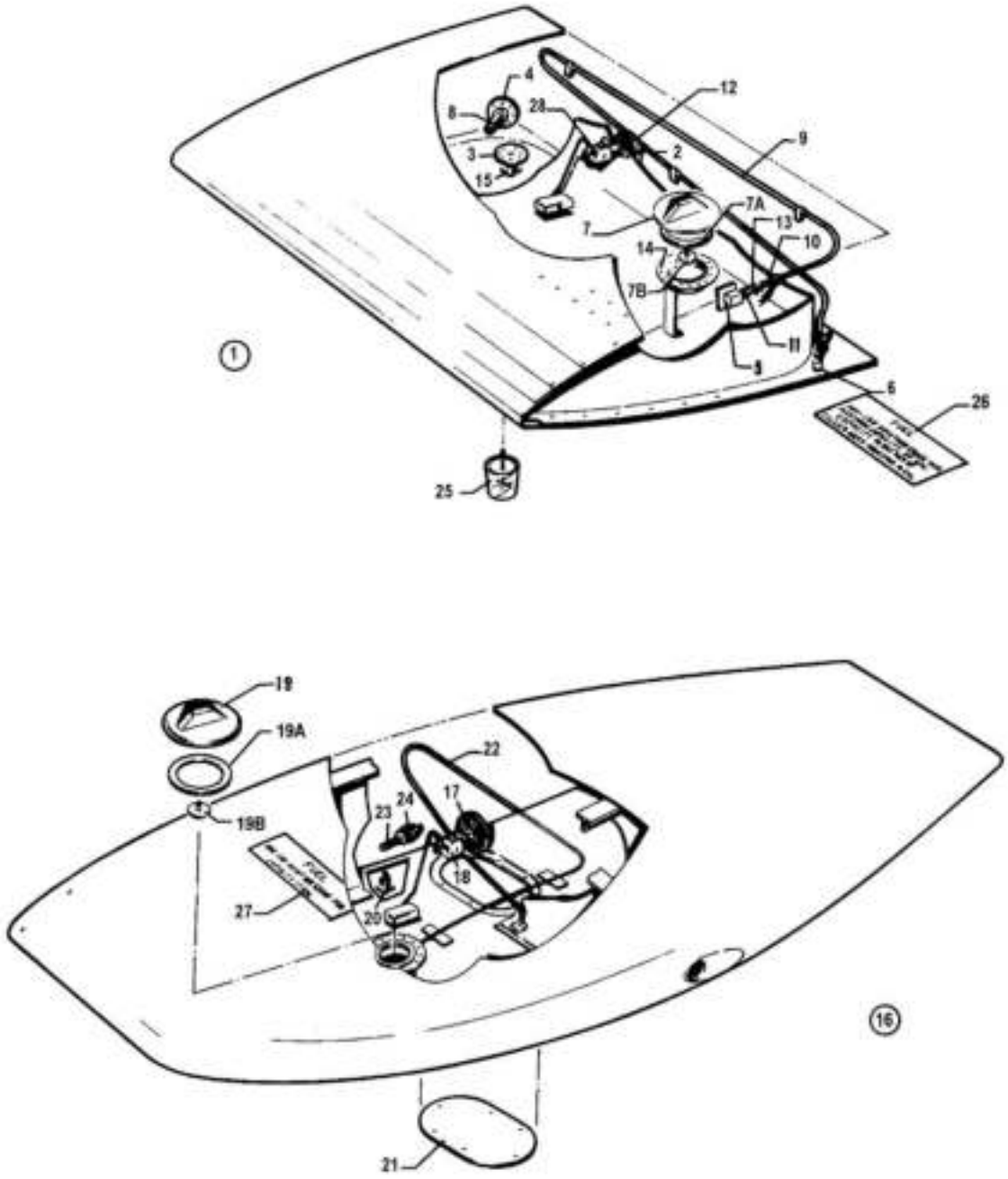

Figure 91. Fuel Tank Assemblies
(PA-32-260 - Serial Nos. 32-1 and up)
(PA-32-300 S/N 32-40000 to 32-7840222 incl.)

CODE EXPLANATIONS FOR FIGURE 90

A - Used on PA-32-260 with serial numbers 32-1 and up, and PA-32-300 with serial numbers 32-40000 to 32-784022 incl.
B - Reference latest revision to Piper Service Bulletin 646. Fuel leaks at the lower surface of the wing in the area of the main spar and wing root may be the result of cracked or broken hoses due to vent line fitting misalignment and hose deterioration. Based on aircraft serial number, install either Fuel Tank Vent Modification and Vent Hose Replacement Kit 763-934 or 764-011.
Also reference Part “C” of Piper Service Bulletin 571 and/or latest revision. Fuel tank vents that have been modified per Piper Service Bulletin 342 may not conform to Piper’s specifications. Vents also may have been bent or misaligned in service.
C - Reference latest revision to Piper Service Spares Letter 406, which provides replacement part numbers for most all of the out of production Stewart Warner and A.C. Spark Plug Company indicating systems with Rochester gauges.
D - Reference latest revision to Piper Service Bulletin 251. Randolph Sloshing Sealer 802 is no longer recommended for aircraft application.

PIPER PARTS CATALOG

Figure and Index Number	Part Number	Code	NOMENCLATURE	No. Req.	SERIAL NUMBERS AFFECTED
90-	65042		DRAWING - Wing Assembly (Complete)		
-1	63998-16	D	TANK ASSEMBLY - Fuel, wing, left	1	
	63998-17	D	TANK ASSEMBLY - Fuel, wing, right	1	
-2	462 019		* GASKET - Fuel gauge	1	
-3	62033-00		* PLATE - Drain	1	
-4	63954-00		* OUTLET ASSEMBLY - Fuel tank	1	
-5	62059-00		* FITTING - Fuel line	1	
-6	36625-02	B	* VENT ASSEMBLY - Fuel tank, left	1	
	36625-03	B	* VENT ASSEMBLY - Fuel tank, right	1	
-7	66817-00		* CAP ASSEMBLY - Fuel tank	1	
-7a	66815-00		* * GASKET - Fuel cap	1	
-7b	492 153		* * VALVE - Fuel cap vent (VA3123)	1	
-8	72091-00		* STRAINER - Fuel tank finger	1	
-9	62060-00		* VENT TUBE - Left (with bead)	1	
	62060-01		* VENT TUBE - Right (with bead)	1	
	62060-04		* VENT TUBE - Left (without bead)	1	
	62060-05		* VENT TUBE - Right (without bead)	1	
-10	63913-193		* HOSE - Connector	1	
-10a	63913-194		* HOSE - Connector	1	
-11	451 857		* ADAPTER - (AN840-4D) With bead	1	
	560 951		* ADAPTER - (1068 x 6 x 2) Without bead	1	
-12	62044-00		* PLATE - Fuel tank	1	
-13	554 861		* CLAMP - (SAE TY F-4)	4	
-14	69785-01		* FILLER NECK ASSEMBLY	1	
-15	492 022		DRAIN - Fuel (CCA-1550) Pet Cock Type)	2	
	491 806		DRAIN - Fuel (F391-187B) (Flush type)	2	
-16	65815-04	D	TANK ASSEMBLY - Fuel, wing tip, left	1	
	65815-05	D	TANK ASSEMBLY - Fuel, wing tip, right	1	
-17	462 019		* GASKET - Fuel gauge	1	
-18	766 240	C	* SENDER - Fuel - (68101-002) (Part of 88171-000 Fuel Quantity. Sender Instructions Kit)	1	
-19	66817-00		* CAP ASSEMBLY - Fuel tank	1	
-19a	66815-00		* * GASKET - Fuel cap	1	
-19b	492 153		* * VALVE - Fuel cap vent (VA3123)	1	
-20	492 022		* DRAIN - (CCA-1550)	1	
-21	65107-00		* COVER - Access	1	
-22	65108-04		* TUBE ASSEMBLY - Vent, left	1	
	65108-05		* TUBE ASSEMBLY - Vent, right	1	
-23	68763-00		* STRAINER - Fuel tank	1	
-24	453 656		* BUSHING - (AN912-4D)	1	
-25	67728-00		SAMPLER - Fuel	1	
-26	581 704		PLACARD - Main fuel tank (99367-00)	2	
-27	581 705		PLACARD - Tip fuel tank (99368-00)	2	
-28	766 240	C	SENDER - Fuel - (68101-002) (Part of 88171-000 Fuel Quantity Sender Instructions Kit)	2	

When ordering, always specify Part Number, Description, and Serial Number of Aircraft

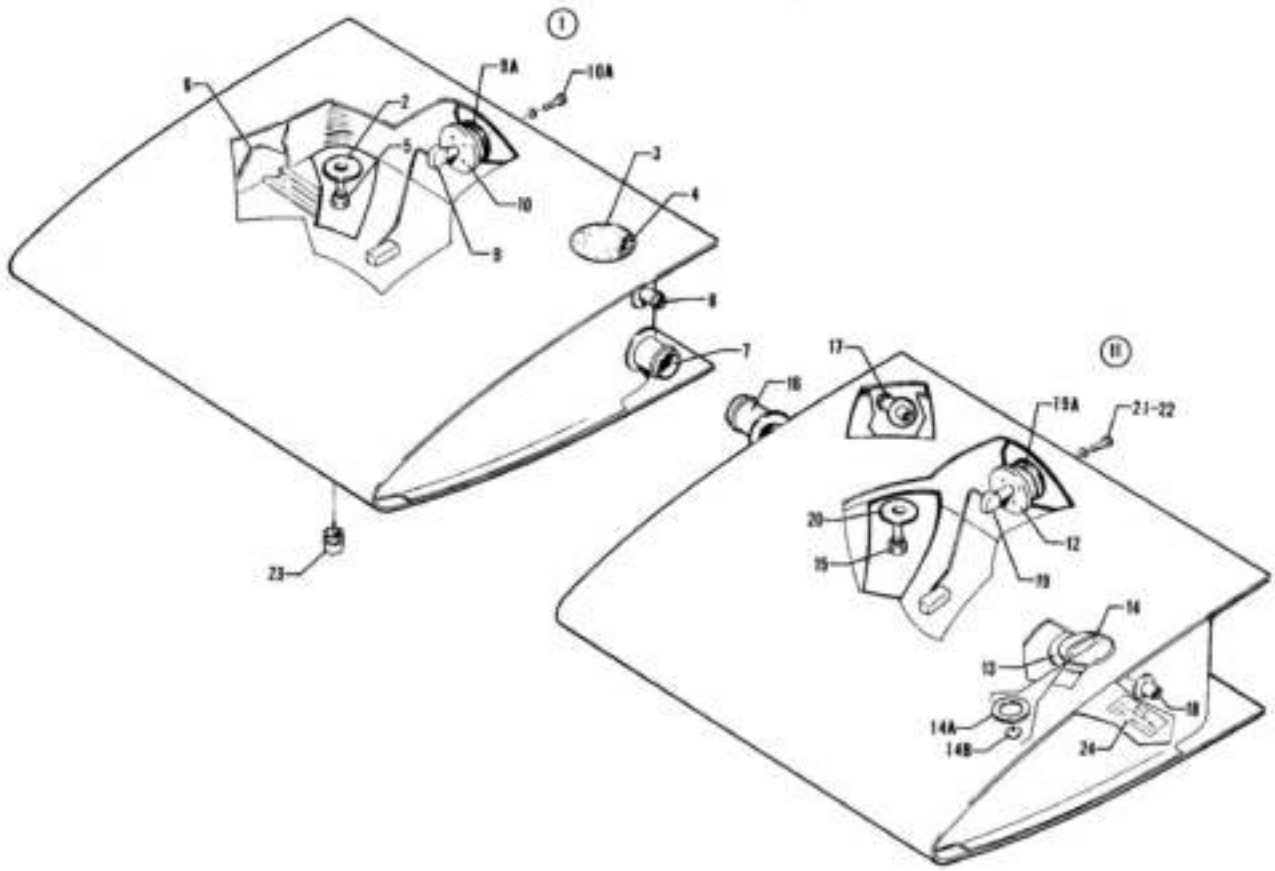

Figure 91. Fuel Tank Assemblies
(PA-32-300 - Serial Nos. 32-7940001 and up)
(PA-32R-300 - Serial Nos. 32R-7680001 and up)

CODE EXPLANATIONS FOR FIGURE 91

A - Used on PA-32-300 with serial numbers 32-7940001 and up, and PA-32R-300 with serial numbers 32R-7680001 and up.
B - Reference latest revision to Service Bulletin 251. Randolph Sloshing Sealer is no longer recommended for aircraft application per the manufacturer.
C - Reference latest revision to Piper Service Bulletin 646, applicable to PA32-300 with serial numbers 32-7740109 to 32-7940290 and PA-32R-300 with serial numbers 32R-7780215 to 32R-7880068. Fuel leaks at the lower surface of the wing in the area of the main spar and wing root may be the result of cracked or broken hoses due to vent line fitting misalignment and hose deterioration. Based on aircraft serial number, install either Fuel Tank Vent Modification and Vent Hose Replacement Kit 763-934 or 764-011.

PIPER PARTS CATALOG

Figure and Index Number	Part Number	Code	NOMENCLATURE	No. Req.	SERIAL NUMBERS AFFECTED
91-	38121		DRAWING - Wing Installation		
-1	95071-04	B	TANK ASSEMBLY - Fuel, inboard, left	1	
	95071-05	B	TANK ASSEMBLY - Fuel, inboard, right	1	
-2	62033-00		* PLATE - Drain	1	
			DELEATED		
-5	492 278		* DRAIN - Fuel (F391-187)	1	
-6	96871-00		* OUTLET ASSEMBLY - Fuel tank, left	1	
	96871-01		* OUTLET ASSEMBLY - Fuel tank, right	1	
-7	95067-00		* FITTING ASSEMBLY - Tank interconnect	1	
-8	96288-00	C	* TUBE ASSEMBLY - Fuel tank vent	1	
-9	550 503		* SENDER - Fuel (PS10013-5)	1	
-9a	755 049		* * GASKET - Fuel sender (15-716)	1	
-10	62044-00		* PLATE - Fuel tank	1	
-10a	401 266		* BOLT - (AN3-5A)	5	
	407 043		* WASHER - Spring (MS35338-43)	5	
	407 564		* WASHER - (AN960-10)	5	
-11	95070-04	B	TANK ASSEMBLY - Fuel, outboard, left	1	
	95070-05	B	TANK ASSEMBLY - Fuel, outboard, right	1	
-12	62044-00		* PLATE - Fuel tank	1	
-13	69785-00		* NECK ASSEMBLY - Filler	1	
-14	66817-00		* CAP ASSEMBLY - Fuel tank	1	
-14a	66815-00		* * GASKET - Fuel cap	1	
-14b	492 153		* * VALVE - Fuel cap vent (VA3123)	1	
-15	492 278		* DRAIN - Fuel (F391-187)	1	
-16	95067-00		* FITTING ASSEMBLY - Tank interconnect	1	
-17	96288-00	C	* TUBE ASSEMBLY - Fuel tank vent	1	
-18	95068-00		* FITTING - Tank vent	1	
-19	550 504		* SENDER - Fuel (PS10013-6)	1	
-19a	755 049		* * GASKET - Fuel sender (15-716)	1	
-20	62033-00		* PLATE - Drain	1	
-21	401 266		* BOLT - (AN3-5A)	5	
	407 043		* WASHER - Spring (MS35338-43)	5	
	407 564		* WASHER - (AN960-10)	5	
-22	494 191		* WASHER - Fiber (PS10063-4)	5	
-23	67728-00		SAMPLER - Fuel	1	
-24	582 536		PLACARD - Fuel capacity (69669-82)	2	

When ordering, always specify Part Number, Description, and Serial Number of Aircraft

2H24
INTENTIONALLY LEFT BLANK

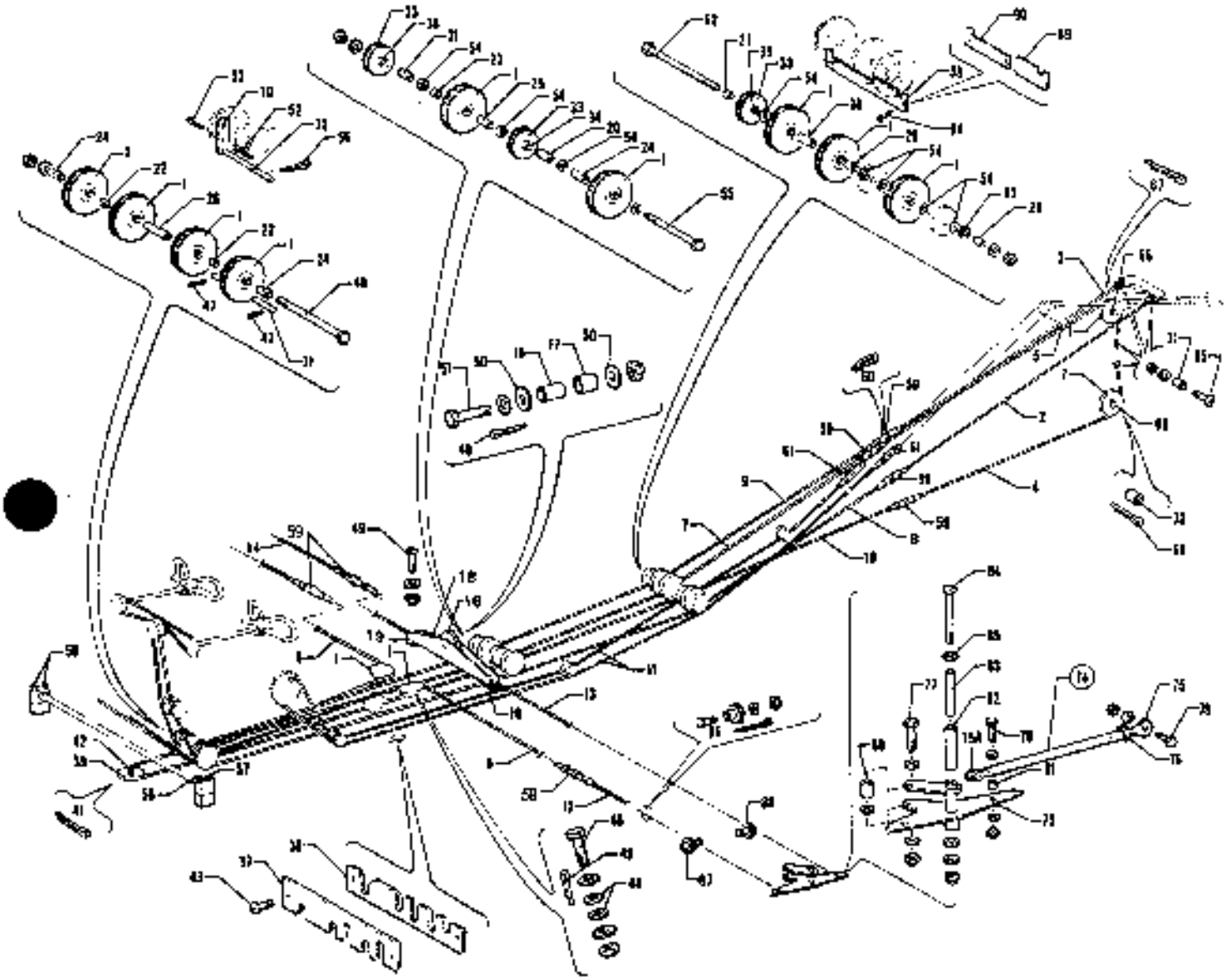

Figure 92 Control System Installation

CODE EXPLANATIONS FOR FIGURE 92

A - Used on PA-32S-300 Seaplane Model only.
B - Used on PA-32-260 with serial numbers 32-1 to 32-1110 inclusive, and PA-32-300 with serial numbers 32-40000 to 32-40565 incl.
C - Used on PA-32-260 with serial numbers 32-1111 and up, and PA-32-300 with serial numbers 32-40566 to 32-7840222 incl.
D - See Figure 46 if electric trim is installed.
E - Used on PA-32-260 with serial numbers 32-1 to 32-7300076 incl., 32-7500001 and up, PA-32-300 with serial numbers 32-40000 to 32-730201 incl., 32-7540001 and up, and PA-32R-300.
F - Used on PA-32-260 with serial numbers 32-7400001 to 32-7400061 incl., and PA-32-300 with serial numbers 32-7440001 to 32-7440182 incl.
G - Used on PA-32-260 with serial numbers 32-1 to 32-7400061 incl., and PA-32-300 with serial numbers 32-40000 to 32-7440182 incl.
H - Used on PA-32-260 with serial numbers 32-7500001 and up, PA-32-300 with serial numbers 32-7540001 and up, and PA-32R-300.
J - Used on PA-32R-300 only.
K - Used on PA-32-260 with serial numbers 32-1 to 32-1320 incl., and PA-32-300 with serial numbers 32-40000 to 32-41018 incl.
L - Used on PA-32-260 and PA-32-300 only.
M - Used on PA-32-260 with serial numbers 32-7100001 and up, and PA-32-300 with serial numbers 32-7140001 and up.
N - Used on PA-32-300 only.
O - Used on PA-32-260 with serial numbers 32-1 and up, PA-32-300 with serial numbers 32-40000 to 32-7840222 incl., and PA-32R-300 with serial numbers 32R-7680001 and up.
P - Reference latest revision to Piper Service Letter 768, applicable to PA-32R-300. The aileron balance cable may contact the adjacent roll servo cable guard. Modification of the routing of the aileron balance cable can be accomplished using Kit 761 042.

PIPER PARTS CATALOG

Figure and Index Number	Part Number	Code	NOMENCLATURE	No. Req.	SERIAL NUMBERS AFFECTED
92-	68450	B	DRAWING - Control System Installation		
	69372	C	DRAWING - Control System Installation		
	38411	N	DRAWING - Control System Installation		32-7940001 and up
	38003	J	DRAWING - Control System Installation		32R-7680001 to 7880068
-1	41001-10		PULLEY - Fiber, 2-3/4”	13	
-2	62701-08	E	CABLE ASSEMBLY - Aft rudder, left	1	
	62701-134	F	CABLE ASSEMBLY - Aft rudder, left	1	
	62701-23	A	CABLE ASSEMBLY - Aft rudder, left	1	
-3	62701-08		CABLE ASSEMBLY - Aft rudder, right	1	
	62701-23	A	CABLE ASSEMBLY - Aft rudder, right	1	32-40000 to 32-7240147 incl.
-4	62701-12		CABLE ASSEMBLY - Aft stabilator, left	1	
	62701-27	A	CABLE ASSEMBLY - Aft stabilator, left	1	32-40000 to 32-7240147 incl.
-5	62701-13		CABLE ASSEMBLY - Aft stabilator, right	1	
	62701-28	A	CABLE ASSEMBLY - Aft stabilator, right	1	32-40000 to 32-7240147 incl.
-6	62701-36		CABLE ASSEMBLY - Wing aileron	2	
	62701-50	A	CABLE ASSEMBLY - Wing aileron	2	32-40000 to 32-7240147 incl.
-7	62701-37		CABLE ASSEMBLY - Forward rudder, right	1	
	62701-51	A	CABLE ASSEMBLY - Forward rudder, right	1	32-40000 to 32-7240147 incl.
-8	62701-38	G	CABLE ASSEMBLY - Forward rudder, left	1	
	62701-37	H	CABLE ASSEMBLY - Forward rudder, left	1	
-9	62701-37		CABLE ASSEMBLY - Forward stabilator, right	1	
	62701-51	A	CABLE ASSEMBLY - Forward stabilator, right	1	32-40000 to 32-7240147 incl.
-10	62701-40		CABLE ASSEMBLY - Forward stabilator, left	1	
	62701-53	A	CABLE ASSEMBLY - Forward stabilator, left	1	32-40000 to 32-7240147 incl.
-11	62701-41	D	CABLE ASSEMBLY - Forward stabilator trim	2	
	62701-54	A,D	CABLE ASSEMBLY - Forward stabilator trim	2	32-40000 to 32-7240147 incl.
-12	62701-03		CABLE ASSEMBLY - Aileron, wing	2	
	62701-18	A	CABLE ASSEMBLY - Aileron, wing	2	32-40000 to 32-7240147 incl.
-13	62701-48		CABLE ASSEMBLY - Aileron balance, left	1	
	62701-55	A	CABLE ASSEMBLY - Aileron balance, left	1	32-40000 to 32-7240147 incl.
	62701-36	J,P	CABLE ASSEMBLY - Aileron balance, left	1	32R-7680001 to 7880068
-14	62701-05		CABLE ASSEMBLY - Aileron balance, right	1	
	62701-20	A	CABLE ASSEMBLY - Aileron balance, right	1	32-40000 to 32-7240147 incl.
	62701-36	J,P	CABLE ASSEMBLY - Aileron balance, right	1	32R-7680001 to 7880068
-15	62712-03		BEARING - Inner	1	
-16	62711-02		PULLEY	1	
-17	62713-03		BUSHING - Outer	1	
-18	68470-00		BRACKET - Pulley	1	
-19	95061-152	O	FILLER BLOCK	2	
	62762-00	N	FILLER BLOCK	2	32-7940001 and up
-20	62714-02		BEARING - Inner	1	
-21	62714-03		BEARING	4	
-22	62743-02		SPACER - Bushing	2	
-23	62743-03		SPACER - Bushing	1	
-24	62743-04		SPACER - Bushing	3	
-25	62743-05		SPACER - Bushing	1	
-26	62743-06		SPACER - Bushing	1	
-27	62743-08		SPACER - Bushing	1	
-28	62743-09		SPACER - Bushing	1	
-29	62743-10		SPACER - Bushing	1	
-30	62743-11		SPACER - Bushing	1	
-31	63900-31		BUSHING	4	
	63900-73	A	BUSHING	4	32-40000 to 32-7240147 incl.
-32	63900-32	L	BUSHING - Stabilator pulley	2	
	63900-74	A	BUSHING - Stabilator pulley	2	32-4000 to 32-7240147 incl.
	63900-37	J	BUSHING - Stabilator pulley	2	
-33	62711-03		PULLEY	3	
-34	62715-03		BEARING - Outer	1	
-35	62715-02		BEARING	2	

When ordering, always specify Part Number, Description, and Serial Number of Aircraft

PIPER PARTS CATALOG

Figure and Index Number	Part Number	Code	NOMENCLATURE	No. Req.	SERIAL NUMBERS AFFECTED
92-36	68453-00		FAIRLEAD - Spar box	1	
-37	68454-00		FAIRLEAD - Spar box	1	
-38	68455-00	K	FAIRLEAD - Controls	1	
-39	481 625		PULLEY - (MS20220-2)	1	
-40	401 385		BOLT - (AN5-64A)	1	
	407 566		WASHER - (AN960-516)	2	
	404 889		NUT - (MS20365-524C)	1	
-41	424 054		COTTER PIN - (MS24665-140)	2	
-42	401 353		BOLT - (AN5-12A)	1	
	407 566		WASHER - (AN960-516)	1	
	404 889		NUT - (MS20365-524C)	1	
-43	415 150	L	SCREW - (AN526-632R10)	2	
	415 521	J	SCREW - (MS35206-231)	2	
-44	407 586		WASHER - (AN960-516L)	4	
-45	424 052		COTTER PIN - (MS24665-134)	4	
-46	401 188		BOLT - (AN5-10A)	2	
	407 566		WASHER - (AN960-516)	2	
	404 889		NUT - (MS20365-524C)	2	
-47	424 051		COTTER PIN - (MS24665-132)	2	
-48	424 055		COTTER PIN - (MS24665-138)	1	
-49	401 269		BOLT - (AN3-10A)	2	
	404 564		WASHER - (AN960-10)	2	
	404 887		NUT - (MS20365-1032C)	2	
-50	407 566		WASHER - (AN960-516)	2	
-51	400 008		BOLT - (AN4- 13A)	1	
	407 565		WASHER - (AN960-416)	2	
	404 888		NUT - (MS20365-428C)	1	
-52	424 054		COTTER PIN - (MS24665-140)	1	
-53	424 053		COTTER PIN - (MS24665-136)	1	
-54	407 567		WASHER - (AN960-616)	10	
-55	401 378		BOLT - (AN5-53A)	1	
	407 566		WASHER - (AN960-516)	4	
	404 889		NUT - (MS20365-524C)	1	
-56	424 051		COTTER PIN - (MS24665-132)	2	
-57	400 457	L	BOLT - (AN3-32A)	1	
	400 456	J	BOLT - (AN3-31A)	1	
	400 887		NUT - (MS20365-1032C)	1	
58	400 456		BOLT - (AN3-31A)	3	
	404 887		NUT - (MS20365-1032C)	3	
-59	489 910		BARREL - Turnbuckle (MS21251-B5S)	8	
-60	554 979		CLIP - (MS21256-1)	20	
-61	452 015		BARREL - (NAS649B8S)	2	
-62	401 387		BOLT - (AN5-70A)	1	
	404 889		NUT - (MS20365-524C)	1	
-63	407 566		WASHER - (AN960-516)	6	
-64	415 449	L	SCREW - (AN526-832R8)	3	
	415 535	J	SCREW - (MS35206-245)	4	
-65	400 674		BOLT - Clevis (AN23-12)	4	
	407 564		WASHER - (AN960-10)	4	
	404 392		NUT - (AN320-3)	4	
	424 051		COTTER PIN - (MS24665-132)	4	
-66	401 188		BOLT - (AN4-10A)	1	
	407 566		WASHER - (AN960-516)	1	
	404 889		NUT - (MS20365-524C)	1	
-67	424 053		COTTER PIN - (MS24665-136)	1	
-68	401 354		BOLT - (AN5-13A)	1	
	407 566		WASHER - (AN960-516)	1	
	404 889		NUT - (MS20365-524C)	1	
-69	424 054		COTTER PIN - (MS24665-140)	1	

When ordering, always specify Part Number, Description, and Serial Number of Aircraft

PIPER PARTS CATALOG

Figure and Index Number	Part Number	Code	NOMENCLATURE	No. Req.	SERIAL NUMBERS AFFECTED
92-70	62709-00		GUARD - Pin holder	1	
-71	62710-02		PIN - Cable guard	1	
-72	62710-03		PIN - Cable guard	1	
-73	62771-00	L	BELLCRANK ASSEMBLY - Aileron, left	1	
	62771-01	L	BELLCRANK ASSEMBLY - Aileron, right	1	
	95680-00	J	BELLCRANK ASSEMBLY - Aileron, left	1	
	95680-01	J	BELLCRANK ASSEMBLY - Aileron, right	1	
-74	62766-00		ROD ASSEMBLY - Aileron	2	
	62766-03	A	ROD ASSEMBLY - Aileron	2	32-40000 to 32-7240147 incl.
-75	452 334		* BEARING - Rod end (PS10020-1-6RX)	1	
	452 459	A	* BEARING - Rod end (MV34-14)	1	
-75a	452 383	L	* BEARING - Rod end	1	
	452 461	J	*BEARING - Rod end (HMV-4)	1	
-76	404 322		*NUT - Lock (AN316-4R)	1	
-77	401 318	L	BOLT - (AN4-20A)	2	
	402 679	J	BOLT - (NAS1104-13)	2	
	407 565		WASHER - (AN960-416)	6	
	404 888	L	NUT - (MS20365-428C)	2	
	406 974	J	NUT - (NAS1022-C4)	2	
-78	400 674		BOLT - (AN23-12)	4	
	404 564		WASHER - (AN960-10)	8	
	404 392		NUT - (AN320-3)	4	
	424 051		COTTER PIN - (MS24665-132)	4	
-79	400 443		BOLT - (AN3-12A)	2	
	404 564		WASHER - (AN960-10)	6	
	404 887		NUT - (MS20365-1032C)	2	
-80	63900-26	L	SPACER - Aileron push rod	2	
	63900-71	A	SPACER - Aileron push rod	1	32-40000 to 32-7240147 incl.
-81	63900-31		BUSHING - Bellcrank	4	
	63900-73	A	BUSHING - Bellcrank	4	32-40000 to 32-7240147 incl.
-82	63882-08	L	BUSHING - Bellcrank	2	
	63882-41	J	BUSHING - Bellcrank	2	
-83	65003-04	L	BUSHING - Bellcrank	2	
	95061-54	J	BUSHING - Bellcrank	2	
-84	400 457	M	BOLT - (AN3-32A)	2	
	400 496	J	BOLT - (AN3-73A)	2	
	407 564		WASHER - (AN960-10)	2	
	407 584	J	WASHER - (AN960-10L)	2	
	404 887		NUT - (MS20365-1032C)	2	
	95675-00	J	WASHER	4	
-85	81342-13	M	WASHER - Bellcrank	2	
-86	481 651	J	PULLEY - (MS20220-1)	2	
	401 353	J	BOLT - (AN5-12A)	2	
	407 566	J	WASHER - (AN960-516)	2	
	404 889	J	NUT - (MS20365-524C)	2	
	424 053	J	COTTER PIN - (MS24665-136)	2	
-87	62711-02	J	PULLEY	2	
	62713-04	J	BUSHING	2	
	65003-47	J	BUSHING	2	
	401 315	J	BOLT - (AN4-15A)	2	
	407 565	J	WASHER - (AN960-416)	2	
	424 513	J	PIN - (NAS427K19)	2	
-88	62711-05	J	PULLEY	2	
	62713-04	J	BUSHING	2	
	65003-47	J	BUSHING	2	
	401 315	J	BOLT - (AN4-15A)	2	
	407 565	J	WASHER - (AN960-416)	2	
	424 062	J	COTTER PIN - (MS24665-289)	2	
-89	99430-00	J	FAIRLEAD - Controls, left	1	
-90	99429-00	J	FAIRLEAD - Controls, right	1	

When ordering, always specify Part Number, Description, and Serial Number of Aircraft

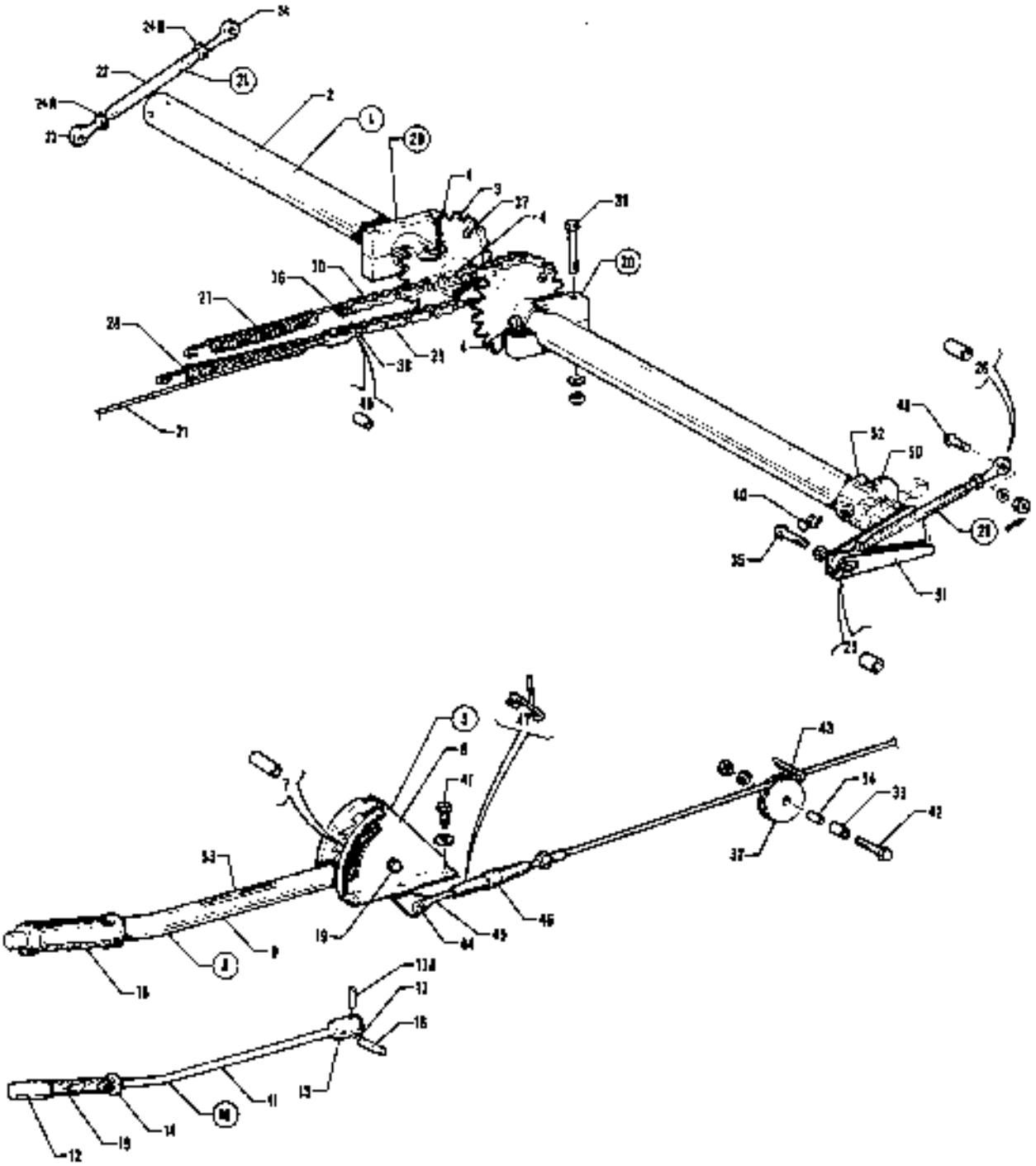

Figure 83 Flap Control Installation

CODE EXPLANATIONS FOR FIGURE 93

A - Used on PA-32-260 with serial numbers 32-7100001 and up, PA-32-300 with serial numbers 32-7140001 and up, and PA-32R-300.
B - Used on PA-32-260 with serial numbers 32-1 to 32-1110 incl., and PA-32-300 with serial numbers 32-40000 to 32-40565 incl.
C - Used on PA-32-260 with serial numbers 32-1111 and up, and PA-32-300 with serial numbers 32-40566 to 32-7840222 incl.
D - Used on PA-32-260 with serial numbers 32-1 to 32-1320 incl., and PA-32-300 with serial numbers 32-40000 to 32-41018 incl.
E - Used on PA-32R-300 only.
F - Used on PA-32S-300 Seaplane Model only.
G - Used on PA-32-260 with serial numbers 32-1 to 32-7300076 incl., and PA-32-300 with serial numbers 32-40000 to 32-7340201 incl.
H - Used on PA-32-260 with serial numbers 32-7400001 and up, PA-32-300 with serial numbers 32-7440001 and up, and PA-32R-300.
J - Refer to Figure 119 if AltiMatic III C is installed.
K - Used on PA-32-260 and PA-32-300 only.
L - Used on PA-32-260 with serial numbers 32-1 and up, and PA-32-300 with serial numbers 32-40000 to 32-7840222 incl.
M - Used on PA-32-300 only.
N - Reference latest revision to Piper Service Letter 571. To modify the flap lever assembly, install roll pin and locking pin provided in Flap Handle Assembly Modification Kit 760 531.
O - Reference latest revision to Piper Service Bulletin 965. Aircraft using manual flap levers may experience worn bolts and elongated holes at the cable attach point, and may have a flap lever bolt installed that is marginal in length.

PIPER PARTS CATALOG

Figure and Index Number	Part Number	Code	NOMENCLATURE	No. Req.	SERIAL NUMBERS AFFECTED
93-	68450	B	DRAWING - Control System Installation		
	69372	C	DRAWING - Control System Installation		
	38411	M	DRAWING - Control System Installation		32-7940001 and up
	38003	E	DRAWING - Control System Installation		
-1	68451-00		FLAP TORQUE TUBE ASSEMBLY - Complete	1	
-2	68452-00		* TORQUE TUBE - Flap	1	
-3	62789-00		* SPROCKET ASSEMBLY - Flap torque tube	2	
-4	400 011		* BOLT - (AN4-16A)	4	
	407 585		* WASHER - (AN960-416)	4	
	404 836		* NUT - (MS20365-428C)	4	
-5	62706-00	D,O	LEVER ASSEMBLY - Flap control	1	
	62706-07	A,O	LEVER ASSEMBLY - Flap control	1	
-6	62738-00	D	* BRACKET - Flap lever	1	
	69292-02	A	* BRACKET ASSEMBLY - Flap lever	1	
-7	62740-00		* BUSHING - Flap lever	1	
-8	63782-00	D,N	* HANDLE ASSEMBLY - Flap lever	1	
	63782-04	A,N	* HANDLE ASSEMBLY - Flap lever	1	
-9	63781-00		* * TUBE ASSEMBLY - Flap lever	1	
-10	63391-00	D	* * PLUNGER ASSEMBLY - Flap lever	1	
	63391-03	A	* * PLUNGER ASSEMBLY - Flap lever	1	
-11	63391-02		* * * TUBE - Plunger	1	
-12	62733-00		* * * PLUG - Plunger, upper	1	
-13	62734-00	D	* * * PLUG - Plunger, lower (.190 pin hole)	1	
	62734-02	A	* * * PLUG - Plunger, lower (.252 pin hole)	1	
-14	62736-00		* * * WASHER	1	
-15	50111-00		* * * SPRING	1	
-16	480 696		* * * PIN - Roll (59-022-094-0625)	2	
-17	480 715	D	* * PIN - Roll (59-040-187-1500)	1	
	63782-03	A	* * PIN - Solid (.250 diameter)	1	
-17a	480 733	D	* * PIN - Roll (79-012-062-0375) 3/8” long	1	
	480 698	A	* * PIN - Roll (59-012-062-0625) 5/8” long	1	
-18	63779-00		* * GRIP - Flap lever	1	
-19	401 274		* BOLT - (AN3-15A)	1	
	407 564		* WASHER - (AN960-10)	2	
	404 887		* NUT - (MS20365-1032C)	1	
-20	62745-00	G	PILLOW BLOCK ASSEMBLY - Torque shaft support	2	
	35402-00	H,J	CLAMP ASSEMBLY - Torque shaft support	2	
-21	62764-00		ROD ASSEMBLY - Flap tube	2	
	62764-03	F	ROD ASSEMBLY - Flap tube	2	32S-40000 to 32S-7240147 incl.
-22	62764-02		* TUBE - Flap	1	
	65388-19	F	* TUBE - Flap	1	32S-40000 to 32S-7240147 incl.
-23	452 335		* BEARING - (F34-14)	1	
-24	452 336		* BEARING - (FL34-14)	1	
-24a	404 322		* NUT - (AN316-4R)	1	
-24b	404 320		* NUT - (AN316-4L)	1	
-25	63900-38		BUSHING - Flap rod end	2	
	63900-75	F	BUSHING - Flap rod end	2	32S-40000 to 32S-7240147 incl.
-26	63900-39		BUSHING - Flap rod end	2	
	63900-76	F	BUSHING - Flap rod end	2	32S-40000 to 32S-7240147 incl.
-27	62820-00		SPRING - Flap return	1	
-28	62821-00		SPRING - Flap cable tension	1	
-29	593 101		DRIVE CHAIN - (RS37 (43)	1	
-30	593 101		DRIVE CHAIN - (RS37 (43)	1	
-31	62701-14		CABLE ASSEMBLY - Flap	1	
	62701-29		CABLE ASSEMBLY - Flap	1	32S-40000 to 32S-7240147 incl.
-32	62711-02		PULLEY - Flap	1	

When ordering, always specify Part Number, Description, and Serial Number of Aircraft

PIPER PARTS CATALOG

Figure and Index Number	Part Number	Code	NOMENCLATURE	No. Req.	SERIAL NUMBERS AFFECTED
99-33	62713-02		BEARING	1	
-34	62712-02		BEARING - Inner	1	
-35	400-443		BOLT - (AN3-12A)	2	
	407 564		WASHER - (AN960-10)	2	
-36	400 562		BOLT - (AN21-8)	1	
	407 562		WASHER - (AN960-6)	1	
	404 391		NUT - (AN320-1)	1	
	424 041		COTTER PIN - (MS24665-5)	1	
-37	400 653		BOLT - Clevis (AN21-9)	2	
	407 562		WASHER - (AN960-6)	4	
	404 391		NUT - (AN320-1)	2	
	424 041		COTTER PIN - (MS24665-5)	2	
-38	400 653		BOLT - Clevis (AN21-9)	1	
	404 391		NUT - (AN320-1)	1	
	424 041		COTTER PIN - (MS24665-5)	1	
-39	400 448	G	BOLT - (AN3-22A)	4	
	400 440	H,J	BOLT - (AN3-6A)	4	
	407 564	J	WASHER - (AN960-10)	4	
	404 887	J	NUT - (MS20365-1032C)	4	
-40	417-781		SCREW - (AN520-10R24)	2	
	404 224		NUT - (AN315-3R)	2	
-41	400 438		BOLT - (AN3-4A)	6	
	407 564		WASHER - (AN960-10)	6	
-42	400 004		BOLT - (AN4-7A)	1	
	407 585		WASHER - (AN960-416L)	1	
	404 888		NUT - (MS20365-428C)	1	
-43	424 052		COTTER PIN - (MS24665-134)	1	
-44	400 672	O	BOLT - Clevis (AN23-10)	1	
	400 673	O	BOLT - Clevis (AN23-11)	1	
	63900-174	O	BUSHING	1	
	407 564		WASHER - (AN960-10)	1	
	404 392		NUT -(AN320-3)	1	
	424 051		COTTER PIN - (MS24665-132)	1	
-45	461 136		FORK - (NAS645-22RS)	1	
-46	489 910		BARREL - Turnbuckle (MS21251-B5S)	1	
-47	554 979		CLIP - (MS21256-1)	2	
-48	400 680		BOLT - Clevis (AN23-18)	2	
	407 564		WASHER - (AN960-10)	2	
	404 100		NUT - Castle (AN310-3)	2	
	424 051		COTTER PIN - (MS24665-132)	2	
-49	82732-76		BUSHING	1	
-50	62856-00		FITTING ASSEMBLY - Left	1	
	62856-01		FITTING ASSEMBLY - Right	1	
-51	62727-00		TUBE ASSEMBLY - Flap torque tube, left	1	
	65388-17		TUBE ASSEMBLY - Flap torque tube, left	1	32S-40000 to 32S-7240147 incl.
	62727-01		TUBE ASSEMBLY - Flap torque tube, right	1	
	65388-18	F	TUBE ASSEMBLY - Flap torque tube, right	1	32S-40000 to 32S-7240147 incl.
-52	401 318		BOLT - (AN4-20A)	4	
	407 565		WASHER - (AN960-416)	4	
	404 888		NUT - (MS20365-428C)	4	
-53	35669-27		PLACARD - Flap lever	1	

When ordering, always specify Part Number, Description, and Serial Number of Aircraft

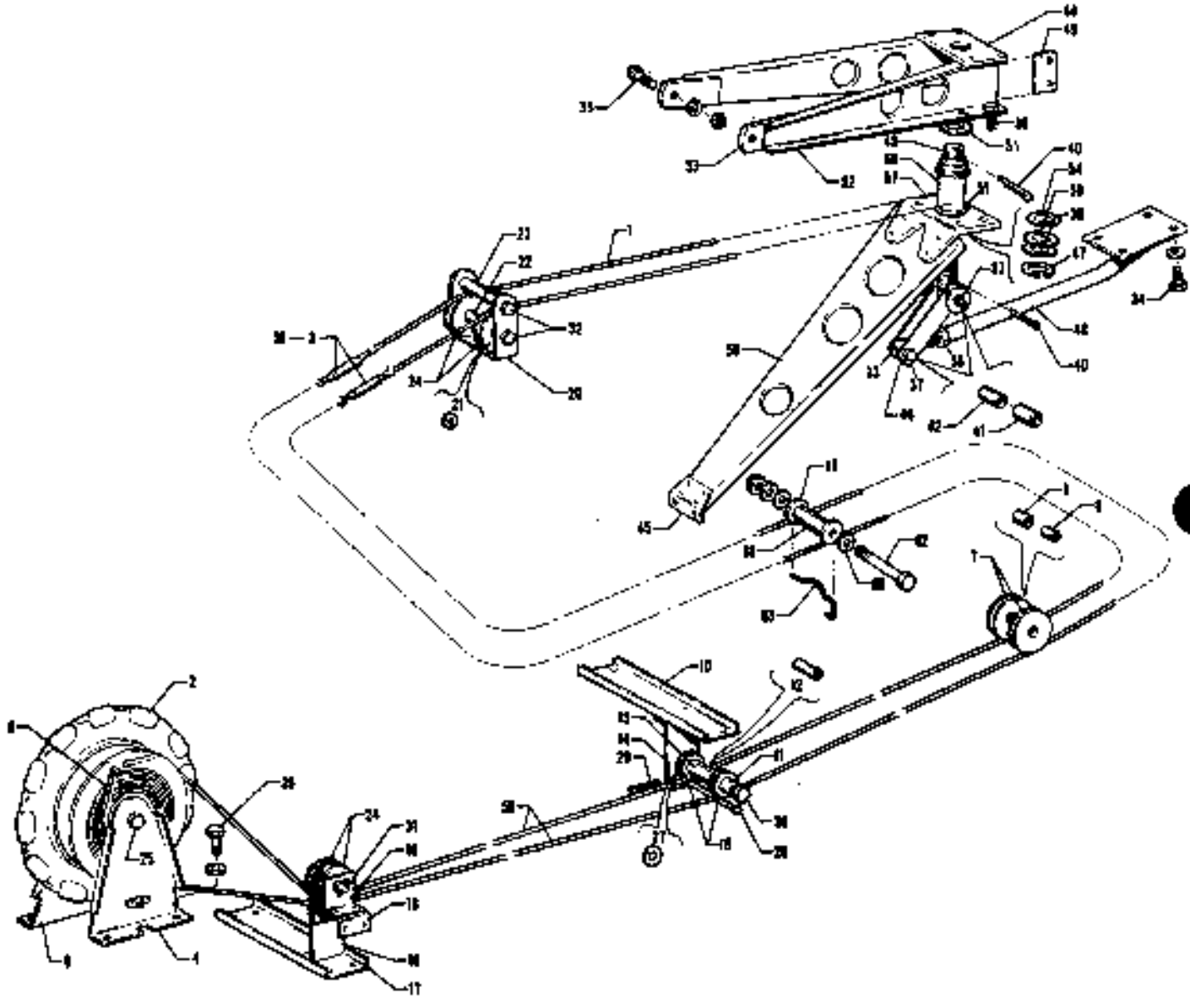

Figure 64. Stabilator Trim Installation

CODE EXPLANATIONS FOR FIGURE 94

A - Used on PA-32-260 with serial numbers 32-1 to 32-1110 incl., and PA-32-300 with serial numbers 32-40000 to 32-40565 incl
B - Used on PA-32-260 with serial numbers 32-1111 and up, and PA-32-300 with serial numbers 32-40566 and up
C - Used on PA-32-260 with serial numbers 32-1 to 32-1320 incl., and PA-32-300 with serial numbers 32-40000 to 32-41019 incl
D - Used on PA-32-260 with serial numbers 32-7100001 and up, PA-32-300 with serial numbers 32-7140001 and up, and PA-32R-300
E - Used on PA-32-260 and PA-32-300 only
F - Used on PA-32R-300 only
G - Used on PA-32S-300 Seaplane Model only
H - See Figure 113 if electric trim is installed
J - Used on PA-32-260 with serial numbers 32-1111 and up, and PA-32-300 with serial numbers 32-40566 to 32-7840222 incl
K - Used on PA-32-300 only
W - These parts must be ordered from Service Spares Department, Piper Aircraft, Lock Haven, Penna

PIPER PARTS CATALOG

Figure and Index Number	Part Number	Code	NOMENCLATURE	No. Req.	SERIAL NUMBERS AFFECTED
84-	68460	A	DRAWING - Control System Installation		
	69372	J	DRAWING - Control System Installation		
	38411	K	DRAWING - Control System Installation		32-7940001 and up
	38003	F	DRAWING - Control System Installation		
	65258		DRAWING - Stabilator Trim Installation		
-1	62701-47		CABLE - Stabilator trim	1	
-2	68414-00	E	WHEEL ASSEMBLY - Trim tab	1	
	68414-03	F	WHEEL ASSEMBLY - Trim tab	1	
-3	554 979	W	CLIP - (MS21256-1)	4	
-4	68466-00		BRACKET ASSEMBLY - Trim tab	1	32-1 to 32-150 inclusive
	68739-00		BRACKET ASSEMBLY - Trim tab	1	32-151 and up
-5	68468-00	C	INDICATOR - Stabilator trim	1	
	68468-02	D	INDICATOR - Stabilator trim	1	
-6	68466-00	E	BRACKET - Trim tab	1	
-7	62711-03		PULLEY - Trim tab	2	
-8	62715-02		BUSHING - Trim tab	2	
-9	62714-03		BUSHING - Trim tab	2	
-10	68475-00		CHANNEL - Stabilator tunnel wall	1	
-11	63900-62		BUSHING - Stabilator trim pulley	1	
-12	63900-67		BUSHING - Stabilator trim pulley	1	
-13	63900-68		BUSHING - Stabilator trim pulley	1	
-14	68474-00		BRACKET - Stabilator trim pulley	1	
-15	62711-04		PULLEY - Stabilator trim pulley	4	
16	68478-00		BRACKET - Stabilator trim pulley	1	
-17	68477-00		CHANNEL - Stabilator trim	1	
-18	68480-00		BRACKET - Stabilator trim pulley	1	
-19	68479-00		BRACKET - Stabilator trim pulley	1	
-20	68472-00		BRACKET - Stabilator trim pulley	1	
21	86012-40	E	WASHER - Stabilator trim pulley	2	
-22	63900-66		BUSHING - Stabilator trim pulley	1	
-23	63900-65		BUSHING - Stabilator trim pulley	1	
-24	481 640		PULLEY - (MS24566-19)	4	
-25	400 446	W	BOLT - (AN3-16A)	1	
	63900-61		BUSHING	1	
	407 584	W	WASHER - (AN960-10L)	2	
	404 887	W	NUT - (MS20365-1032C)	1	
	62633-37		WASHER	1	
-26	400 438	W	BOLT - (AN3-4A)	6	
	407 984	W	WASHER - (AN960-10)	6	
-27	407 585	W	WASHER - (AN960-416)	1	
-28	424 169	A,W	PIN - (MS20392-1C67)	1	
	69851-00	9	PIN - Retainer	1	
-29	424 051	W	COTTER PIN - (MS24665-132)	1	
-30	400 449	W	BOLT - (AN3-24A)	1	
	407 584	W	WASHER - (AN960-10L)	1	
	404 887	W	NUT - (MS20365-1032C)	1	
-31	424 180		PIN - (MS20392-2C23)	1	
	407 584	W	WASHER - (AN960-10L)	1	
	424 051	W	COTTER PIN - (MS24665-132)	1	
-32	401 279	W	BOLT - (AN3-25A)	2	
	407 584	W	WASHER - (AN960-10L)	2	
	404 887	W	NUT - (MS20365-1032C)	2	
	407 584	W	WASHER - (AN960-10)	2	
-33	65264-00		BOLT - Eye, stabilator trim	1	
-34	400 437	W	BOLT - (AN3-3A)	4	
	407 584	W	WASHER - (AN960-10L)	4	

When ordering, always specify Part Number, Description and Serial Number of Aircraft

PIPER PARTS CATALOG

Figure and Index Number	Part Number	Code	NOMENCLATURE	No. Req.	SERIAL NUMBERS AFFECTED
94-35	401 266		BOLT - (AN3-5A)	2	
	494 066		WASHER - (K19001-3)	2	
	406 551		NUT - (H19000-3)	2	
-36	400 438		BOLT - (AN3-4A)	4	
	407 564		WASHER - (AN960-10)	4	
	404 887		NUT - (MS20365-1032C)	4	
-37	401 269		BOLT - (AN3-10A)	2	
	407 564		WASHER - 9AN960-10)	4	
	404 887		NUT - (MS20365-1032C)	2	
-38	404 325		NUT - (AN316-7R)	1	
-39	407 684		WASHER - (AN960-C1216L)	1	
-40	424 123		COTTER PIN - (MS24665-368)	2	
-41	63882-09		SLEEVE - Stabilator trim link	2	
-42	65003-06		BUSHING - Stabilator trim link	2	
-43	65246-00		SHAFT - Stabilator trim	1	
-44	65249-00	E	PLATE - Stabilator trim	1	
	65249-02	F	PLATE - Stabilator trim	2	
-45	65252-00		CLIP - Stabilator trim	1	
	65388-49	G	CLIP - Stabilator trim	1	32S-40000 to 32S-7240147 incl.
-46	65253-02		LINK - Stabilator trim	2	
-47	484 747		SNAP RING - (5108-75)	1	
-48	65248-03		ARM ASSEMBLY - Stabilator trim	1	
	65388-65	G	ARM ASSEMBLY - Stabilator trim	1	32S-40000 to 32S-7240147 incl.
-49	68491-00		GUARD - Cable	2	
-50	452 418		BEARING - Thrust (T-1010)	1	
-51	452 413		BEARING - (F-838)	2	
	69127-00	G	BEARING - Flange, stabilator barrel	2	32S-40000 to 32S-7240147 incl.
-52	65244-00		RIB - Stabilator trim	2	
-53	65251-00		TAB - Stabilator trim	1	
-54	62833-18		SHIM - Stabilator trim	1	
-55	63530-00		BARREL - Stabilator trim	1	
-56	65245-00		RIB - Stabilator trim	1	
-57	65250-00	E	CLIP - Stabilator trim	1	
	65250-02	F	CLIP - Stabilator trim	1	
-58	62701-41	H	CABLE ASSEMBLY - Forward stabilator trim	2	
	62701-54	G,H	CABLE ASSEMBLY - Forward stabilator trim	2	32S-40000 to 32S-7240147 incl.
-59	452 015		BARREL - (NAS649B8S)	2	
-60	407 585		WASHER - (AN960-416L)	2	
-61	63900-60		BUSHING	1	
-62	400 446		BOLT - (AN3-16A)	1	
	407 584		WASHER - (AN960-10L)	1	
	404 887		NUT - (MS20365-1032C)	1	
-63	99856-00		PIN - Cable guard	1	

When ordering, always specify Part Number, Description, and Serial Number of Aircraft

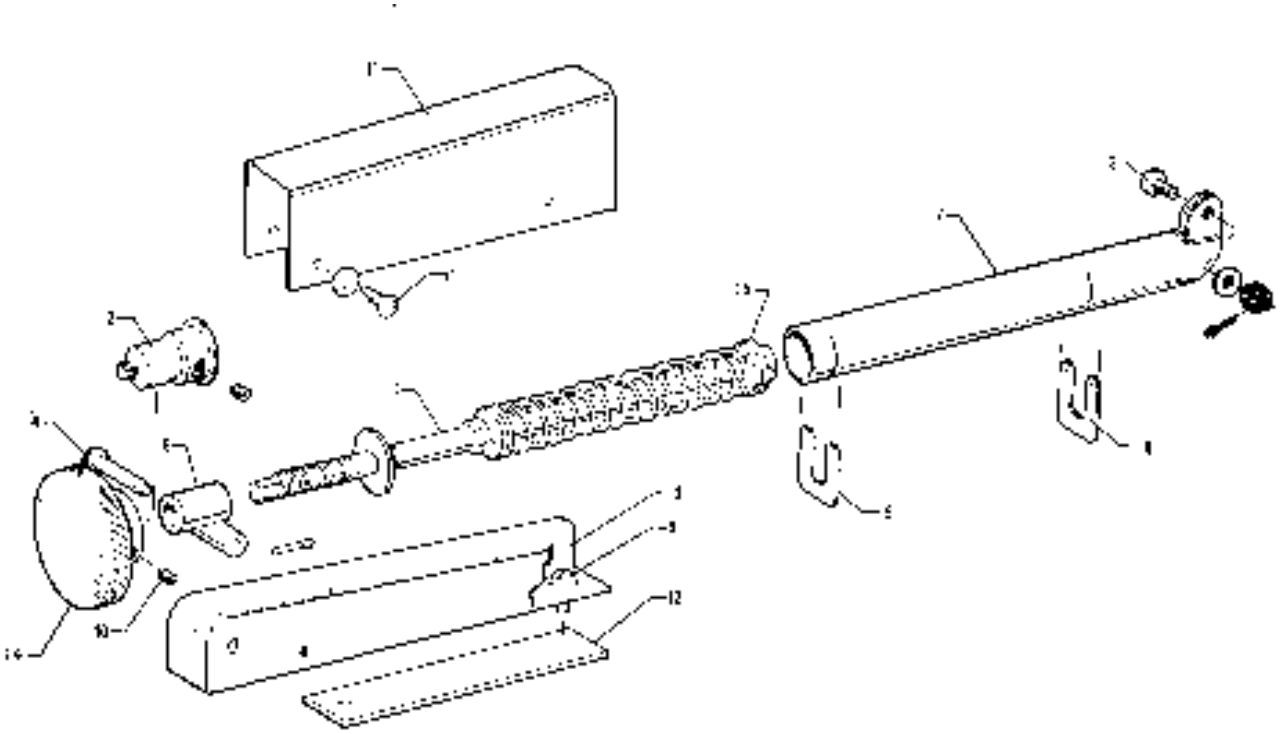

Figure 95. Rudder Trim Mechanism Installation

CODE EXPLANATIONS FOR FIGURE 95

A Used on PA-32-260 with serial numbers 32-1 to 32-1110 incl., and PA-32-300 with serial numbers 32-40000 to 32-40565 incl
B - Used on PA-32-260 with serial numbers 32-1111 and up, and PA-32-300 with serial numbers 32-40566 to 32-7640222 incl
C - Used on PA-32-260 with serial numbers 32-1111 to 32-1320 incl., PA-32-300 with serial numbers 32-40566 to 32-41018 incl., and PA-32R-300
D - Used on PA-32-260 with serial numbers 32-7100001 and up, and PA-32-300 with serial numbers 32-7140001 and up
E - Used on PA-32-260 with serial numbers 32-1 to 32-1320 incl., and PA-32-300 with serial numbers 32-40000 to 32-41018 incl
F - Used on PA-32R-300
G - Used on PA 32-260 with serial numbers 32-1111 and up, PA-32-300 with serial numbers 32-40566 and up, and PA-32R-300
H - Used on PA-32-300 only
W - These parts must be ordered from Service Spares Department, Piper Aircraft, Lock Haven, Penna

PIPER PARTS CATALOG

Figure and Index Number	Part Number	Code	NOMENCLATURE	No. Req.	SERIAL NUMBERS AFFECTED
86-	68450	A	DRAWING - Control System Installation		
	88372	B	DRAWING - Control System Installation		
	38411	H	DRAWING - Control System Installation		32-7940001 and up
	38003	F	DRAWING - Control System Installation		
	62828	A	DRAWING - Rudder Trim Mechanism Installation		
	69371	C	DRAWING - Rudder Trim Mechanism Installation		
	99211	D	DRAWING - Rudder Trim Mechanism Installation		
-1	62829-06		SHAFT ASSEMBLY - Rudder trim	1	
-2	89349-00	G	EXTENSION - Rudder trim shaft	1	
-3	400 672	W	BOLT - (AN23-10)	1	
	404 392	W	NUT - (AN320-3)	1	
	424 061	W	COTTER PIN - (MS24665-132)	1	
	407 584	W	WASHER - (AN960-10L)	1	
-4	424 185	W	PIN - Flat head (MS20392-2-33)	1	
	424 051	W	COTTER PIN - (MS24665-132)	1	
-5	415 535	W	SCREW - (MS35206-246)	3	
	407 583	W	WASHER - (AN960-8L)	7	
	404 833	W	NUT - (MS20364-832C)	1	
-6	419 683	A,W	SCREW - (4 x 1/2")	4	
	494 001	A,W	WASHER - (4)	4	
-7	66630-00		HOUSING - Rudder trim	1	
-8	62831-00		BUSHING ASSEMBLY - Rudder trim	1	
-9	62832-00		CLIP - Rudder trim	2	
-10	419 967		SCREW - Set (MS51984 132)	2	
-11	65218-00	A	CHANNEL - Rudder trim cover	1	
-12	62838-00	E	PLATE - Rudder trim	1	
	99181-00	D	PLATE - Rudder trim	1	
-13	62837-00	A	CHANNEL - Rudder trim	1	
	62837-02	G	CHANNEL ASSEMBLY - Rudder trim	1	
-14	62838-00		KNOB	1	
-15	62833-127		WASHER	1	

When ordering, always specify Part Number, Description and Serial Number of Aircraft

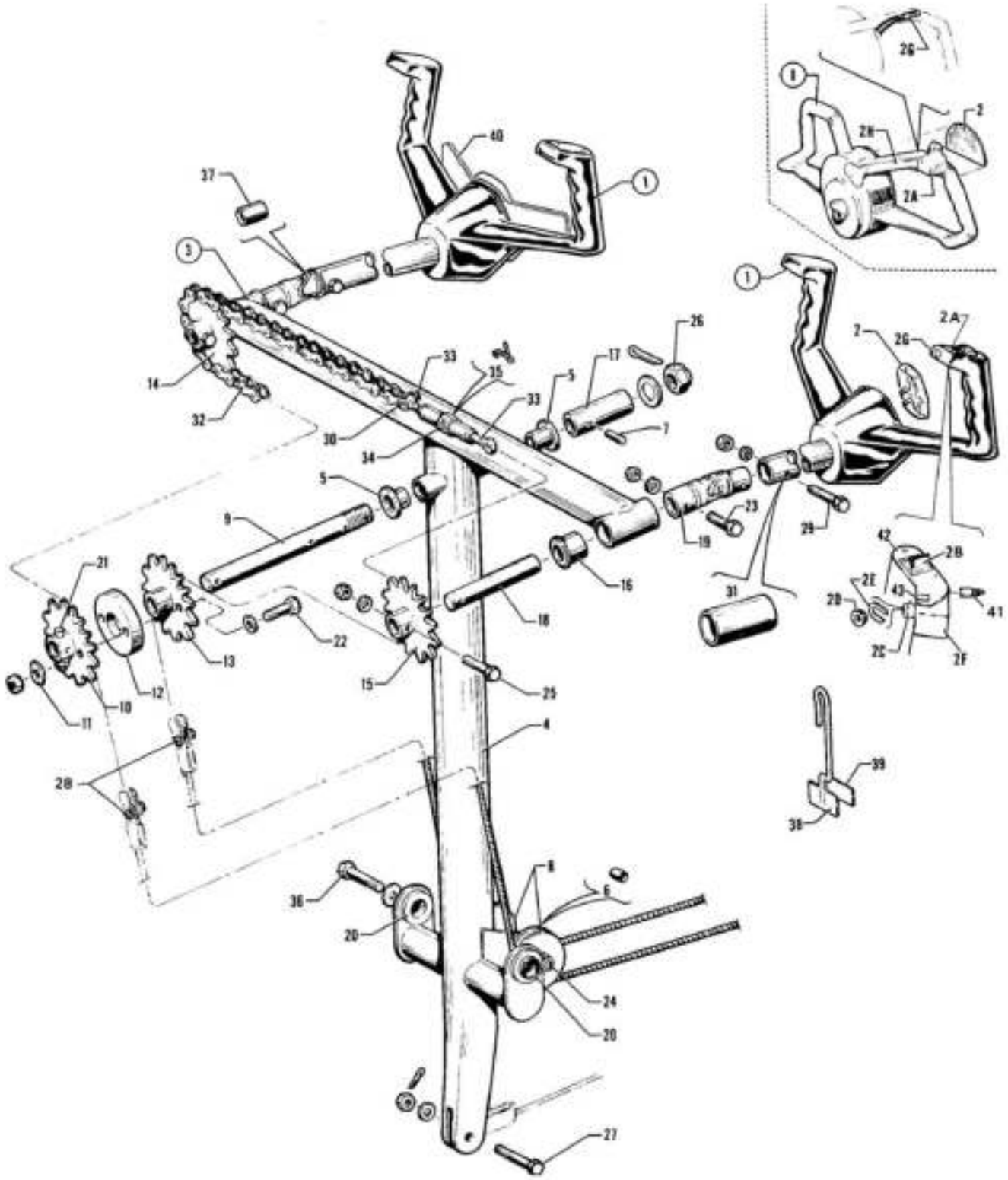

Figure 96. Control Wheel Installation

CODE EXPLANATIONS FOR FIGURE 96

A - Ascertain O.D. of control wheel shaft before ordering. Control wheel assembly does not include switches. Order desired switches separately.
B - Used with the bowtie style control wheel.
C - Used with the ramshorn style control wheel.
D - Used when only electric trim or electric trim and AutoFlite are installed on a bowtie style control wheel.
E - Used on PA-32-260 with serial numbers 32-1 to 32-1110 incl., and PA-32-300 with serial numbers 32-40000 to 32-40565 incl.
F - Used when AltiMatic III is installed on a bowtie style control wheel.
G - Used on PA-32-260 with serial numbers 32-451 to 32-1110 incl., and PA-32-300 with serial numbers 32-40000 to 32-40565 incl.
H - Used on PA-32-260 with serial numbers 32-1111 and up, PA-32-300 with serial numbers 32-40566 and up, and PA-32R-300.
J - Used when AltiMatic III C is installed.
K - used on PA-32-260 with serial numbers 32-7500001 and up, PA-32-300 with serial numbers 32-7540001 and up, and PA-32R-300.
L - Used on PA-32-260 with serial numbers 32-1111 and up, and PA-32-300 with serial numbers 32-40566 to 32-7840222 incl.
M - Used on PA-32R-300 only.
N - Used on PA-32-260 with serial numbers 32-601 to 32-960 incl., and PA-32-300 with serial numbers 32-40000 to 32-40415 incl.
O - Used on PA-32-260 with serial numbers 32-961 and up, PA-32-300 with serial numbers 32-40416 and up, and PA-32R-300.
P - Used on PA-32-260 with serial numbers 32-1 to 32-960 incl., and PA-32-300 with serial numbers 32-40000 to 32-40415 incl.
Q - Used when AltiMatic III is installed.
R - Used on PA-32-260 with serial numbers 32-51 to 32-1110 incl., and PA-32-300 with serial numbers 32-40000 to 32-40565 incl.
S - Used on PA-32-260 with serial numbers 32-1251 to 32-7200055 incl., and PA-32-300 with serial numbers 32-40851 to 32-7240147 incl.
T - Used on PA-32-260 with serial numbers 32-7800001 and up, PA-32-300 with serial numbers 32-7840001 and up, and PA-32R-300 with serial numbers 32R-7880001 and up.
U - Used on PA-32-260 with serial numbers 32-7800001 and up, PA-32-300 with serial numbers 32-7840001 and up, and PA-32R-300 with serial numbers 32R-7880001 and up if boom mike with electric trim and AutoFlite II is installed.
V - Used on PA-32-260 with serial numbers 32-1 to 32-1110 incl., and PA-32-300 with serial numbers 32-40000 to 32-40565 incl.
If Electric Trim Servo Replacement Kit 763 850 has been installed, order switch part No. 67443-04. If the bowtie style control wheel has been replaced with a ramshorn style control wheel, order switch part No. 761-039.
X - Used on PA-32-260 with serial numbers 32-1 to 32-1075 incl., and PA-32-300 with serial numbers 32-40000 to 32-40545 incl.
Y - Used on PA-32-300 only.
Z - Reference latest revision to Piper Service Bulletin 556, applicable to PA-32-260 and PA-32-300, which provides instructions to modify the electric trim switch return spring supplied with previous Kit 760-517.
Also reference latest revision to Piper Service Bulletin 332, applicable to PA-32-260 and PA-32-300 with reference to Electric Trim Switch Modification Kit 760-517, which has been replaced by Kit 761-039.

PIPER PARTS CATALOG

Figure and Index Number	Part Number	Code	NOMENCLATURE	No. Req.	SERIAL NUMBERS AFFECTED
96-	68450	E	DRAWING - Control System Installation		
	69372	L	DRAWING - Control System Installation		
	38411	Y	DRAWING - Control System Installation		
	38003	M	DRAWING - Control System Installation		
-1	78729-02	A	WHEEL ASSEMBLY - Control (3/4 O.D. shaft)		
			(left grip cored)	2	32-1 to 32-50 incl.
	79276-00	A	WHEEL ASSEMBLY - Control (1 1/8 O.D. shaft)		
			(left grip cored)	2	32-51 and up
-2	63920-00	B	* MEDALLION - Piper	1	
	79275-00	C	* MEDALLION - Piper	1	
-2a	63778-00	D,V,Z	SWITCH AND HOUSING ASSEMBLY - Electric trim	1	
	63778-04	F,G,	SWITCH AND HOUSING ASSEMBLY - Electric trim	1	
	761 039	C,H,Z	KIT - Electric trim switch assembly	1	
	756 047	Z	* KNOB RETAINING RIVET - (1/16X3/4 flthd 100 Garron)	1	
	96994-03	J,K	SWITCH ASSEMBLY - Electric trim and trim interrupt A/P disc	1	
-2b	587 862	J,K	* SWITCH - Manual electric trim (1C670)	1	
-2c	762 226	J,K	* SWITCH - Trim interrupt A/P disc. (40S77)	1	
-2d	15660-02	J,K	ADAPTER - Trim interrupt A/P disc. switch	1	
-2e	15661-02	J,K	ADAPTER - Trim interrupt A/P disc. switch	1	
-2f	37729-00	J,K	BRACKET ASSEMBLY - Switch	1	
-2g	68828-00	B	SWITCH ASSEMBLY - AutoFlite	1	
	67463-00	C	SWITCH ASSEMBLY - AutoFlite	1	
-2h	68829-00	B,E	COVER - Switch wire	1	
-3	62703-23		CONTROL COLUMN ASSEMBLY	1	32-1 to 32-300 inclusive
	62703-28		CONTROL COLUMN ASSEMBLY	1	32-301 to 32-600 inclusive
	62019-02	N	CONTROL COLUMN ASSEMBLY	1	
	62019-04	O	CONTROL COLUMN ASSEMBLY	1	
-4	62703-21		* TEE BAR ASSEMBLY - Control column	1	32-1 to 32-300 inclusive
	62703-34		* TEE BAR ASSEMBLY - Control column	1	32-301 and up
-5	452 372		** BEARING - (F504-2)		2
-6	62712-02		* BUSHING - Inner, control	1	32-1 to 32-300 inclusive
	62712-04		* BUSHING - Inner, control	1	32-301 and up
-7	480 683	X	* PIN - Roll (59-028-125 x .0687)	1	
-8	62825-00		* PULLEY - Control column	2	32-1 to 32-300 inclusive
	481 651		* PULLEY - Control column (MS20220-1)	2	32-301 and up
-9	62848-02	P	* SHAFT - Control column	1	
	69077-00	Q	* SHAFT - Control column	1	
	69077-00	O	* SHAFT - Control column	1	
-10	63404-00		* SPROCKET - Control column	1	
-11	62784-00		* WASHER - Control column	2	
-12	62782-00		* SPACER - Control column	1	
-13	62778-00		* SPROCKET - Control column	1	
-14	62845-00		* SPROCKET - Control column	1	32-1 to 32-600 inclusive
	62845-02		* SPROCKET - Control column	1	32-601 and up
-15	62839-00		* SPROCKET ASSEMBLY - Control column	1	
-16	452 389		* BUSHING - (F925-2) Control column	4	
-17	62849-00	X	* SPACER - Tee bar	1	
-18	62716-04		* SHAFT - Control column, left	1	32-1 to 32-600 inclusive
	62716-06	N	* SHAFT - Control column, left	1	
	62716-07	O	* SHAFT - Control column, left	1	
	62716-05		* SHAFT - Control column, right	1	32-1 to 32-600 inclusive
	62716-07		* SHAFT - Control column, right	1	32-601 and up
-19	62834-00		* UNIVERSAL JOINT	2	32-1 to 32-600 inclusive
	62834-02		* UNIVERSAL JOINT	2	32-601 and up
-20	452 388		* BEARING - (F4DD)	2	
-21	480 730		* PIN - (AN386-1-6A)	1	
	494 093		* WASHER - (AN975-3)	1	
	404 835		* NUT - (MS20364-1032C)	1	

When ordering, always specify Part Number, Description, and Serial Number of Aircraft

PIPER PARTS CATALOG

Figure and Index Number	Part Number	Code	NOMENCLATURE	No. Req.	SERIAL NUMBERS AFFECTED
96-22	401 269		* BOLT - (AN3-10A)	2	
	407 584		* WASHER - (AN960-10L)	2	
	407 564		* WASHER - (AN960-10)	2	
-23	401 270		* BOLT - (AN3-11A)	2	32-1 to 32-600 inclusive
	480 730		* PIN - Taper (AN386-1-6A)	2	32-601 and up
	407 564		* WASHER - (AN960-10)	2	32-1 to 32-600 inclusive
	494 093		* WASHER - (AN975-3)		2 32-601 and up
	404 887		* NUT - (MS20365-1032)	2	32-1 to 32-600 inclusive
	404 835		* NUT - (MS20364-1032C)	2	32-601 and up
-24	400 025		* BOLT - (AN4-33A)	1	32-1 to 32-300 inclusive
	401 333		* BOLT - (AN4-35A)	1	32-301 and up
	407 585		* WASHER - (AN960-416L)	3	
	407 565		* WASHER - (AN960-416)	2	
	404 888		* NUT - (MS20365-428C)	1	
-25	401 270		* BOLT - (AN3-11A)	2	32-1 to 32-600 inclusive
	480 730		* PIN - Taper - (AN386-1-6A)	2	32-601 and up
	407 564		* WASHER - (AN960-10)	2	32-1 to 32-600 inclusive
	494 093		* WASHER - (AN975-3)	2	32-601 and up
	404 888		* NUT - (MS20365-1032)	2	32-1 to 32-600 inclusive
	404 835		* NUT - (MS20364-1032C)	2	32-601 and up
-26	404 104		* NUT - (AN310-7)	1	
	407 568		* WASHER - (AN960-716)	1	
	424 060		* COTTER PIN - (MS24665-285)	1	
-27	400 056		BOLT - (AN3-11)	1	
	407 564		WASHER - (AN960-10)	1	
	404 392		NUT - (AN320-3)	1	
	424 051		COTTER PIN - (MS24665-132)	1	
-28	400 653		BOLT - Clevis (AN21-9)	2	
	82732-76		BUSHING	2	
	404 391		NUT - (AN320-1)	2	
	424 041		COTTER PIN - (MS24665-5)	2	
-29	401 270		BOLT - (AN3-11A)	4	32-1 to 32-50 inclusive
	400 444		BOLT - (AN3-13A)	4	32-51 to 32-855 inclusive
	66546-00		BOLT - Special	4	32-856 and up
	407 564		WASHER - (AN960-10)	4	32-1 to 32-855 inclusive
	407 584		WASHER - (AN960-10L)	4	32-856 and up
	404 887		NUT - (MS20365-1032C)	4	32-1 to 32-855 inclusive
	404 835		NUT - (MS20364-1032C)	4	32-856 and up
-30	400 653		BOLT - (AN21-9)	2	
	82732-76		BUSHING	2	
	404 391		NUT - (AN320-1)	2	
	424 041		COTTER PIN - (MS24665-5)	2	
-31	62852-00		STOP - Tee bar left	1	32-1 to 32-50 inclusive
	68559-00	R	STOP - Tee bar left	1	
	67193-03	H	STOP - Tee bar left	1	
-32	593 101		DRIVE CHAIN - RS37 (43)	2	
-33	62840-02		EYE BOLT - Turnbuckle left	1	
	62840-03		EYE BOLT - Turnbuckle right	1	
-34	489 910		BARREL - Turnbuckle (MS21251-B5S)	1	
-35	554 979		CLIP - Turnbuckle (MS21256-1)	2	
-36	401 310		BOLT - (AN4-10A)	2	
	62833-85		WASHER - (O D 150 in.)	2	
	62833-86		WASHER - (O D 75 in.)	2	
	404 888		NUT - (MS20365-428C)	2	
-37	68557-00		BUSHING - Control Column	2	32-51 and up
-38	66932-00	S	PIN ASSEMBLY - Control lock	1	
-39	66934-00	S	* PLACARD - Control lock	1	
-40	67984-02	T	CLIP ASSEMBLY - Map	1	
-41	487 904	T	SWITCH - Boom mike (39-1)	1	

When ordering, always specify Part Number, Description, and Serial Number of Aircraft

PIPER PARTS CATALOG

Figure and Index Number	Part Number	Code	NOMENCLATURE	No. Req.	SERIAL NUMBERS AFFECTED
96-42	37729-02	U	BRACKET ASSEMBLY - Switch	1	
-43	35669-16	T	PLACARD - A/P INTR.	1	

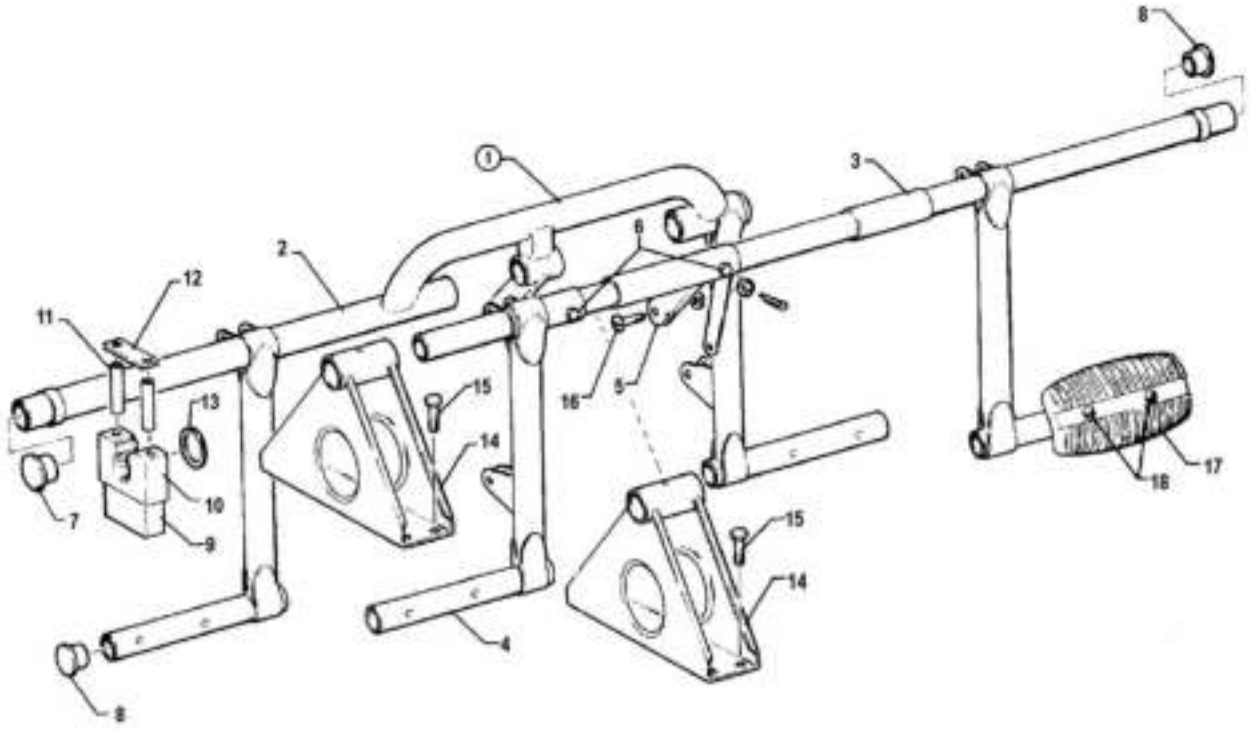

Figure 97. Rudder Pedal Installation

CODE EXPLANATIONS FOR FIGURE 97

A - Used on PA-32-260 with serial numbers 32-1 to 32-1110 incl., and PA-32-300 with serial numbers 32-40000 to 32-40565 incl.
B - Used on PA-32-260 with serial numbers 32-1111 and up, and PA-32-300 with serial numbers 32-40566 to 32-7840222 incl.
C - Used on PA-32-260 with serial numbers 32-1 to 32-1030 incl., and PA-32-300 with serial numbers 32-40000 to 32-40462 incl.
D - Used on PA-32-260 with serial numbers 32-1031 and up, PA-32-300 with serial numbers 32-40463 and up, and PA-32R-300.
E - Used on PA-32-260 with serial numbers 32-601 to 32-7300076 incl., and PA-32-300 with serial numbers 32-40000 to 32-7340201 incl.
F - Used on PA-32-260 with serial numbers 32-7400001 and up, PA-32-300 with serial numbers 32-7440001 and up, and PA-32R-300.
G - Used on PA-32-260 with serial numbers 32-1 to 32-73000076 incl., and PA-32-300 with serial numbers 32-40000 to 32-7340201 incl.
H - Used on PA-32R-300 only.
J - Used on PA-32-300 only.
K - Reference latest revision to Piper Service Bulletin 237, applicable to PA-32-260 airplanes with serial numbers 32-1 to 32-824. Install Rudder Trim Modification Kit, P/N 757-085, to preclude the possibility of failures of the rudder trim arm mounted on the rudder pedal bar assembly.
L - Reference latest revision to Piper Service Letter 671. Installation of reinforcement doublers is required if cracks are detected in the rudder bar assembly.

PIPER PARTS CATALOG

Figure and Index Number	Part Number	Code	NOMENCLATURE	No. Req.	SERIAL NUMBERS AFFECTED
97-	68450	A	DRAWING - Control System Installation		
	69372	B	DRAWING - Control System Installation		
	38411	J	DRAWING - Control System Installation		32-7940001 and up
	38003	H	DRAWING - Control System Installation		
-1	63459-05		RUDDER PEDAL ASSEMBLY - Complete	1	32-1 to 32-600 inclusive
	63459-18	E	RUDDER PEDAL ASSEMBLY - Complete	1	
	63459-11	F	RUDDER PEDAL ASSEMBLY - Complete	1	
-2	63420-02	L	* BAR ASSEMBLY - Rudder control, left	1	32-1 to 32-600 incl.
	63420-04	E,L	* BAR ASSEMBLY - Rudder control, left	1	
	63420-07	F,L	* BAR ASSEMBLY - Rudder control, left	1	
-3	63419-02	L	* BAR ASSEMBLY - Rudder control, right	1	
-4	63458-00	G	* TUBE ASSEMBLY - Rudder control	1	
	63458-04	F	* TUBE ASSEMBLY - Rudder control	1	
-5	63457-00	K	* ARM ASSEMBLY - Rudder control	1	32-1 to 32-600 inclusive
	63457-03		* ARM ASSEMBLY - Rudder control	1	32-601 and up
-6	400 008	C	* BOLT - (AN4-13A)	2	
	402 314	D	* BOLT - (AN174-13A)	2	
	407 585	C	* WASHER - (AN960-416)	2	
	407 585	D	* WASHER - (AN960-416)	4	
	404 888	C	* NUT - (MS20365-428C)	2	
	404 836	D	* NUT - (MS20365-428C)	2	
-7	581 330		* PLUG - Rudder pedal assembly	1	
-8	581 332		* PLUG - Rudder pedal assembly	9	
-9	63456-00		BLOCK - Rudder bar support, bottom	2	
-10	65050-00		BLOCK - Rudder bar support, top	2	
-11	65003-03		BUSHING - Rudder bar support	4	
-12	63455-00		PLATE - Rudder bar support	6	
-13	62833-17		WASHER - Rudder bar support	2	
-14	63451-00		SUPPORT ASSEMBLY - Rudder bar	1	
-15	400 438		BOLT - (AN3-4A)	4	
-16	400 672		BOLT - (AN23-10)	2	
	407 564		WASHER - (AN960-10)	2	
	404 392		NUT - (AN320-3)	2	
	424 051		COTTER PIN - (MS24665-132)	2	
-17	62866-00	G	PAD ASSEMBLY - Rudder control	2	
-18	400 869	G	BOLT - (AN23-17A)	4	
	407 564	G	WASHER - (AN960-10)	4	
	404 835	G	NUT - (MS20364-1032C)	4	

When ordering, always specify Part Number, Description, and Serial Number of Aircraft

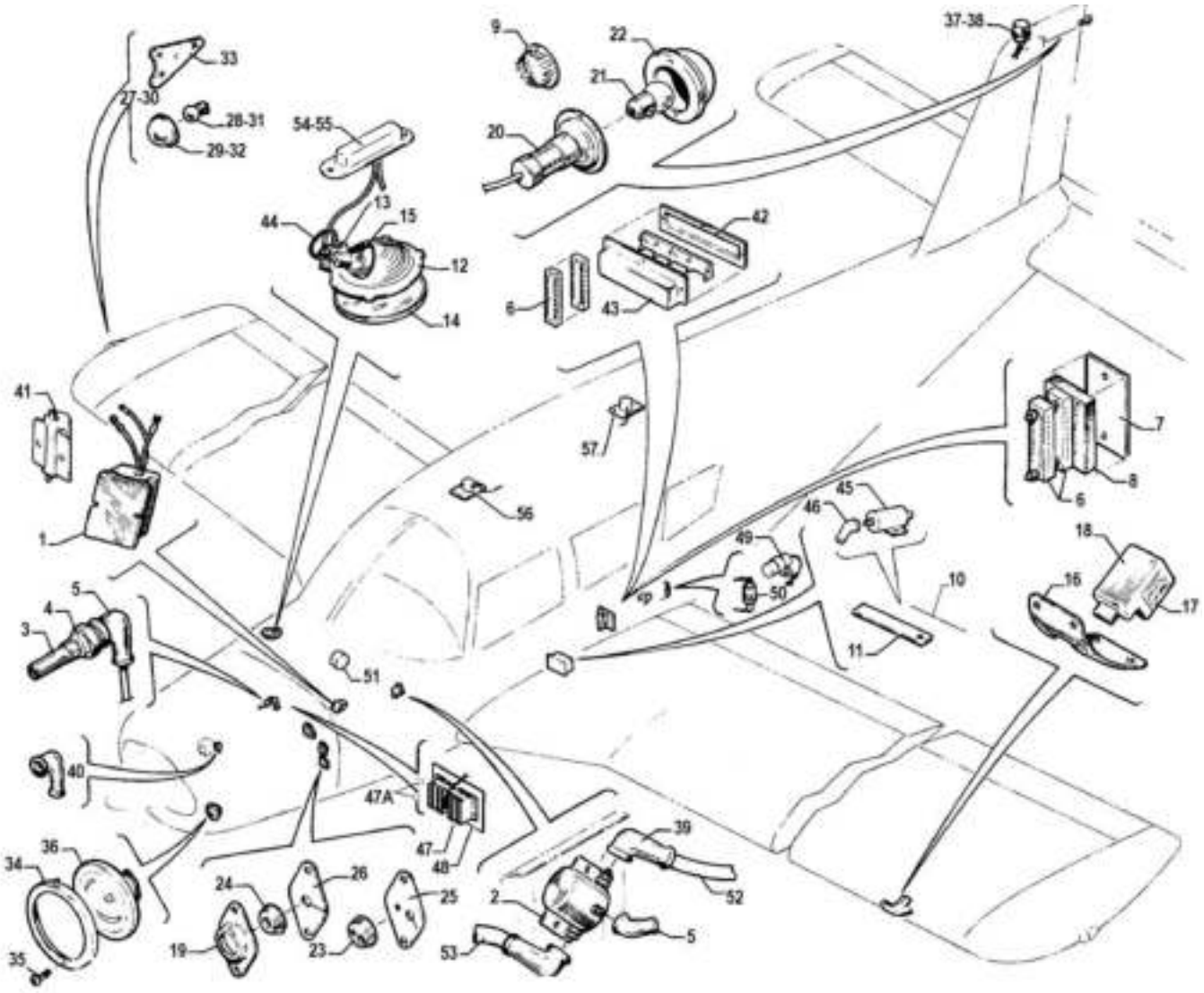

Figure 98. Electrical System Installation

CODE EXPLANATIONS FOR FIGURE 98

A - Optional equipment.
B - Used on PA-32-260 with serial numbers 32-1 to 32-1110 inclusive, and PA-32-300 with serial numbers 32-40000 to 32-40565 inclusive.
C - Used on PA-32-260 with serial numbers 32-1111 and up, and PA-32-300 with serial numbers 32-40566 and up.
D - Used on PA-32-260 only.
E - Used on PA-32-300 only.
F - See Figure 106 if strobe light is installed.
G - Used on PA-32-260 with serial numbers 32-1111 to 32-7400061 inclusive, and PA-32-300 with serial numbers 32-40566 to 32-7440182 inclusive.
H - Used on PA-32-260 with serial numbers 32-7500001 and up, and PA-32-300 with serial numbers 32-7540001 and up.
J - Used on PA-32-260 with serial numbers 32-1111 to 32-7700023 inclusive, and PA-32-300 with serial numbers 32-40566 to 32-7740113 inclusive.
K - Used on PA-32-260 with serial numbers 32-7800001 and up, and PA-32-300 with serial numbers 32-7840001 and up.
L - Used on PA-32-260 with serial numbers 32-1 to 32-7700023 inclusive, and PA-32-300 with serial numbers 32-40000 to 32-7740113 inclusive.
M - Reference latest revision to Piper Service Spares Letter 406, which provides replacement part numbers for most all of the out of production Stewart Warner and A.C. Spark Plug Company indicating systems with Rochester gauges.
N - Reference latest revision to Piper Service Letter 796, applicable to PA-32-260 with serial numbers 32-01 to 32-7600023 inclusive. The landing light wire could bond to the bottom of the cowl and form a dam that may entrap flammable liquids. Drilling a .250 drain hole in the lower cowl can ensure proper drainage.
P - This part is no longer available. Order Alternator Control Service Replacement Kit 764 928v as a replacement.

PIPER PARTS CATALOG

Figure and Index Number	Part Number	Code	NOMENCLATURE	No. Req.	SERIAL NUMBERS AFFECTED
98-	68800	B	DRAWING - Electrical System Installation		
	69380	G	DRAWING - Electrical System Installation		
	69794	H	DRAWING - Electrical System Installation		
-1	68804-03	P	REGULATOR ASSEMBLY- Voltage	1	
-2	99130-02		SOLENOID - Starter (487 169)	1	
-3	553 672	M	SENDING UNIT - Engine, oil temperature gauge (362-EW)	1	
-4	462 012		GASKET - (AH-1522) Engine unit	1	
-5	23969-02		NIPPLE - Sending unit and solenoid	2	
-6	488 462	B	BLOCK - Terminal (5.3 series)	2	
	488 545	C	BOARD ASSEMBLY - Terminal (MS25123-1-12)	1	
-7	63858-00	B	PLATE - Insulating	1	
	65214-00	B	SPACER - Insulating	1	
-9	453 639		BUTTON - Plug (HS-50726)	1	
-10	78140-199	D	WIRE ASSEMBLY - Ground plate	1	
	69050-04	E	WIRE ASSEMBLY - Ground plate	1	
-11	65222-00		PLATE - Fuel pump ground	1	32-1 to 32-375 inclusive
-12	68698-00	A,B	REFLECTOR ASSEMBLY - Forward baggage light	1	
	66632-00	A,J	REFLECTOR ASSEMBLY - Forward baggage light (with manual switch)	1	
	66632-02	A,K	REFLECTOR ASSEMBLY - Forward baggage light (less manual switch)	1	
-13	487 777	A,L	* SWITCH - Baggage light (5518) manual	1	
-14	12715-00	A	LENS - Baggage light	1	
-15	472 036	A	LAMP - Baggage light (89)	1	
-16	19807-00		PLATE - Lift detector mounting	1	
-17	450 741		DECAL - Lift detector (C52207-3)	1	
-18	450 742		DETECTOR - Lift (C52207-4)	1	
-19	66789-00		PLATE - Grommet, firewall seal	8	
-20	472 736	A	LIGHT - White (A2064-1073) Tail light	1	
-21	753 431	A	* BULB - (1073) Tail light	1	
-22	751 203	A	* LENS - White tail light	1	
-23	68770-05		GROMMET - Firewall	2	
-24	68770-04		GROMMET - Firewall	4	
-25	68771-05		GASKET - Firewall	1	
-26	68771-04		GASKET - Firewall	2	
-27	472 665	A,F	LIGHT - Red (PS50113-2) Navigation	1	
-28	751 381	A,F	* BULB - (1512) Navigation	1	
-29	751 202	A,F	* LENS - Red, navigation	1	
-30	472 666	A,F	LIGHT - Green (PS50113-1) Navigation	1	
-31	751 381	A,F	* BULB - (1512) Navigation	1	
-32	751 201	A,F	* LENS - Green, navigation	1	
-33	406 364	A	NUT - Special, light attachment (A6343-6Z3)	2	
-34	65372-00	A,N	RETAINER ASSEMBLY - Landing light	1	
-35	415 152	A,N	SCREW - Landing light (AN526-632R16)	1	
-36	472 661	A,N	BULB - Landing light (PS10008-4509)	1	
-37	452 410	A,F	BEACON - Rotating (Whelen WRML-12)	1	32-1 to 32-375 inclusive
	452 409	A,F	BEACON - Rotating (Grimes D7080A3-12)	1	32-376 to 32-499 inclusive
	452 410	A,F	BEACON - Rotating (Whelen WRML-12)	1	32-500 and up
	452 465	F	BEACON - Rotating (Grimes)	1	
-38	752 307		* BULB - Rotating beacon (Grimes A7079-12)	1	
	758 402		* BULB - Rotating beacon (Whelen WRM-1940)	1	
-39	66580-02		NIPPLE - Starter solenoid	2	
-40	23969-03		NIPPLE - Alternator	1	
-41	450 397	P	RELAY - Overvoltage (PS50034-1)	1	
-42	67404-02	C	COVER - Terminal strip, bottom, black	1	
-43	67404-03	C	COVER - Terminal strip, top, black	1	
-44	63874-00	L	PIGTAIL ASSEMBLY - Baggage light	1	
	63874-02	K	PIGTAIL ASSEMBLY - Baggage light	1	

When ordering, always specify Part Number, Description, and Serial Number of Aircraft

PIPER PARTS CATALOG

Figure and Index Number	Part Number	Code	NOMENCLATURE	No. Req.	SERIAL NUMBERS AFFECTED
98-45	554 224		CAPACITOR - (PS10027-2-4)	1	
-46	23969-02		NIPPLE - Capacitor	2	
-47	79412-10	H	DIODE AND COOLER ASSEMBLY	1	
-47a	467 067	H	* INSULATOR - Cooler (103)	4	
-48	79413-02	H	SHIELD - Cooler assembly	1	
-49	63897-04		CAPACITOR ASSEMBLY - (with one wire lead)	1	
-50	460 594		FILTER - (NFIC-270-4) (with two wire leads)	1	
-51	35214-00		HORN - Stall warning	1	
-52	68807-05		WIRE ASSEMBLY - Battery to starter solenoid	1	
-53	68807-18		WIRE ASSEMBLY - Starter solenoid to starter	1	
-54	37939-02	K	COVER AND SWITCH ASSEMBLY - Baggage light	1	
-55	37873-03	K	* SWITCH - Baggage light, magnetic	1	
-56	37871-05	K	LIGHT ASSEMBLY - Courtesy, forward	1	
-57	37871-03	K	LIGHT ASSEMBLY - Courtesy, aft	1	

When ordering, always specify Part Number, Description, and Serial Number of Aircraft

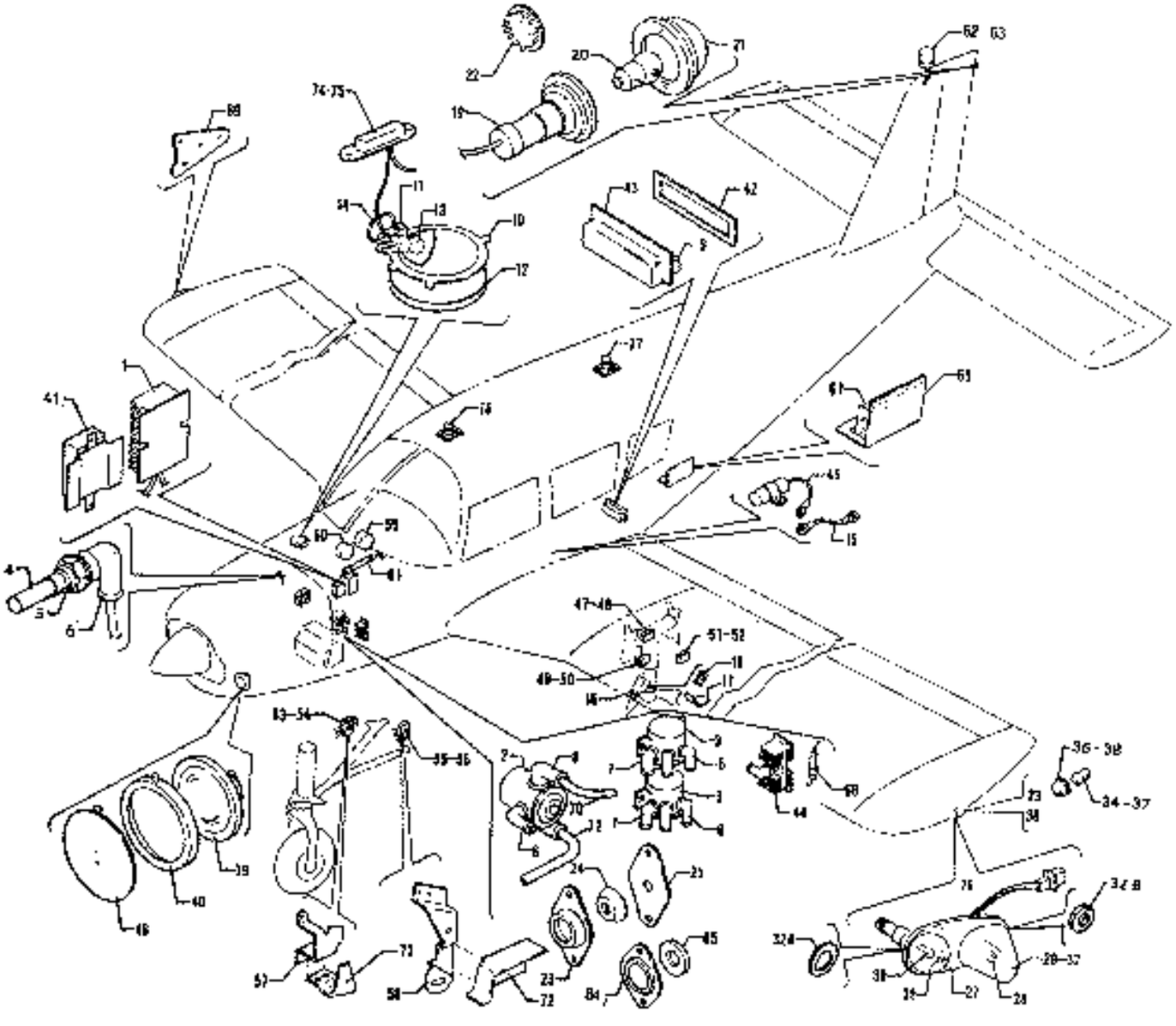

Figure 99 Electrical System Installation

CODE EXPLANATIONS FOR FIGURE 99

A - Optional equipment.
B - Must be used if an A.D.F. Radio Installation is installed.
C - Reference latest revision to Piper Service Spares Letter 406, which provides replacement part numbers for most all of the out of production Stewart Warner and A.C. Spark Plug Company indicating systems with Rochester gauges.
D - This part is no longer available. Order Alternator Control Service Replacement Kit 764-928v as a replacement

PIPER PARTS CATALOG

Figure and Index Number	Part Number	Code	NOMENCLATURE	No. Req.	SERIAL NUMBERS AFFECTED
99-	38004		DRAWING - Electrical System Installation		
-1	68804-03	D	REGULATOR ASSEMBLY- Voltage	1	
-2	99130-02		SOLENOID - Starter (487 169)	1	
-3	484 373		RELAY - Landing gear power (24059)	2	
-4	553 672	C	SENDING UNIT - Engine, oil temperature gauge (362-EW)	1	
-5	462 012		GASKET - (AH1522) Engine unit	1	
-6	23969-02		NIPPLE - Sending unit and solenoids	8	
-7	23969-03		NIPPLE - Alternator and relays	5	
-8	23969-05		NIPPLE - Solenoid	2	
-9	488 545		BOARD ASSEMBLY - Terminal (MS25123-1-12)	1	
-10	66632-00		REFLECTOR ASSEMBLY - Forward baggage light	1	32R-7680001 to 32R-7780549
	66632-02		REFLECTOR ASSEMBLY - Forward baggage light	1	32R-7880001 and up
-11	487 777		* SWITCH - (5518) Baggage light	1	32R-7680001 to 32R-7780549
-12	12715-00		LENS - Baggage light	1	
-13	472 036		LAMP - Baggage light (89)	1	
-14	63874-00		PIGTAIL ASSEMBLY - Baggage light	1	32R-7680001 to 32R-7880549
	63874-02		PIGTAIL ASSEMBLY - Baggage light	1	32R-7880001 and up
-15	69050-04		WIRE ASSEMBLY - Ground plate	1	
-16	450 742		DETECTOR - Lift (C52207-4)	1	
-17	450 745		PLATE - Lift detector mounting (C52207-2)	1	
-18	450 741		DECAL - Lift detector (C52207-3)	1	
-19	472 736	A	LIGHT - White (A2064-1073)	1	
-20	753 431	A	* BULB - (1073)	1	
-21	751 203	A	* LENS - White	1	
-22	453 639		BUTTON - Plug (HS-50726)	1	
-23	66789-00		PLATE - Grommet, firewall seal	2	
-24	68770-04		GROMMET - Firewall	2	
-25	68771-04		GASKET - Firewall	1	
-26	761 158		LIGHT ASSEMBLY - Navigation and strobe, wing tip, red (unshielded)	1	
	761 191	B	LIGHT ASSEMBLY - Navigation and strobe, wing tip, red (shielded)	1	
	761 159		LIGHT ASSEMBLY - Navigation and strobe, wing tip, green (unshielded)	1	
	761 192	B	LIGHT ASSEMBLY - Navigation and strobe, wing tip, green (shielded)	1	
-27	756 037		* RETAINER - Unshielded light lens	1	
-28	761 156		* TUBE ASSEMBLY - Flash, tip	1	
-29	761 157		* LENS - Wing tip strobe (unshielded)	1	
-30	751 202		* LENS - Navigation, red	1	
	751 201		* LENS - Navigation, green	1	
-31	751 381		* BULB - (1512)	1	
-32	761 162	B	* LENS AND RETAINER ASSEMBLY - Wing tip strobe (shielded)	1	
-32a	755 075		* GASKET - Navigation light (W1283)	1	
-32b	755 076		* GASKET - Wing strobe (A-427-4)	1	
-33	472 665		LIGHT - Red (A1285-R12) Navigation	1	
-34	751 381		* BULB - (1512) Navigation	1	
-35	751 202		* LENS - Red, navigation	1	
-36	472 666		LIGHT - Green (A1285-G12) Navigation	1	
-37	751 381		* BULB - (1512) Navigation	1	
-38	751 201		* LENS - Green, navigation	1	
-39	472 661	A	BULB - Landing light (PS10008-4509)	1	
-40	65372-00	A	RETAINER ASSEMBLY - Landing light	1	
-41	450 397	D	RELAY - Overvoltage (PS50034-1)	1	
-42	67404-02		COVER - Terminal strip, bottom	1	
-43	67404-03		COVER - Terminal strip, top	1	

When ordering, always specify Part Number, Description, and Serial Number of Aircraft

PIPER PARTS CATALOG

Figure and Index Number	Part Number	Code	NOMENCLATURE	No. Req.	SERIAL NUMBERS AFFECTED
99-44	79412-10		DIODE AND COOLER ASSEMBLY	1	
	467 067		* INSULATOR - Cooler (103)	4	
-45	63897-04		CAPACITOR ASSEMBLY	1	
-46	12761-02		COVER ASSEMBLY - Landing light opening	1	
-47	67411-02		SWITCH - Down limit, main gear, left	1	
	67411-04		SWITCH - Down limit, main gear, right	1	
-48	451 823		* ACTUATOR - (JE-73)	1	
-49	67411-08		SWITCH - Squat, main gear, left	1	
-50	451 823		* ACTUATOR - (JE-73)	1	
-51	67411-05		SWITCH - Up limit, main gear, left	1	
	67411-07		SWITCH - Up limit, main gear, right	1	
-52	451 823		* ACTUATOR - (JE-73)	1	
-53	67411-21		SWITCH - Down limit, nose gear	1	
-54	451 823		* ACTUATOR - (JE-73)	1	
-55	67411-06		SWITCH - Up limit, nose gear	1	
-56	451 823		* ACTUATOR - (JE-73)	1	
-57	38251-02		CLIP - Limit switch, down	1	
-58	38251-03		CLIP - Limit switch, up	1	
-59	35214-00		HORN - Stall warning	1	
-60	565 288		HORN - Gear warning (02054-3)	1	
-61	38149-00		FLASHER ASSEMBLY - Gear warning	1	
-62	452 410		BEACON - Rotating (Whelen WRML-12)	1	
	452 465		BEACON - Rotating (Grimes)	1	
-63	758 402		* BULB - Rotating beacon (Whelen WRM-1940)	1	
	752 307		* BULB - Rotating beacon (Grimes A7079-12)	1	
-64	18321-00		PLATE - Firewall seal	2	
-65	63915-23		GROMMET - Firewall seal	2	
-66	461 629		FUSE - 5 Ampere (311005)	2	
-67	763 469		POWER SUPPLY - Strobe	1	
-68	99031-00		BRACKET ASSEMBLY - Power supply mounting	1	
-69	406 393	A	NUT - Special, light attachment (A18828-6Z-3)	2	
-70	69325-123		WIRE ASSEMBLY - Battery to starter solenoid	1	
-71	69325-124		WIRE ASSEMBLY - Starter solenoid to starter	1	
-72	38252-02		BRACKET - Nose landing switch shield	1	
-73	38252-03		BRACKET - Nose landing switch shield	1	
-74	37939-02		COVER AND SWITCH ASSEMBLY - Baggage light	1	32R-7880001 and up
-75	37873-03		* SWITCH - Baggage light, magnetic	1	32R-7880001 and up
-76	37871-05		LIGHT ASSEMBLY - Courtesy, forward	1	32R-7880001 and up
-77	37871-04		LIGHT ASSEMBLY - Courtesy, aft	1	32R-7880001 and up

When ordering, always specify Part Number, Description, and Serial Number of Aircraft

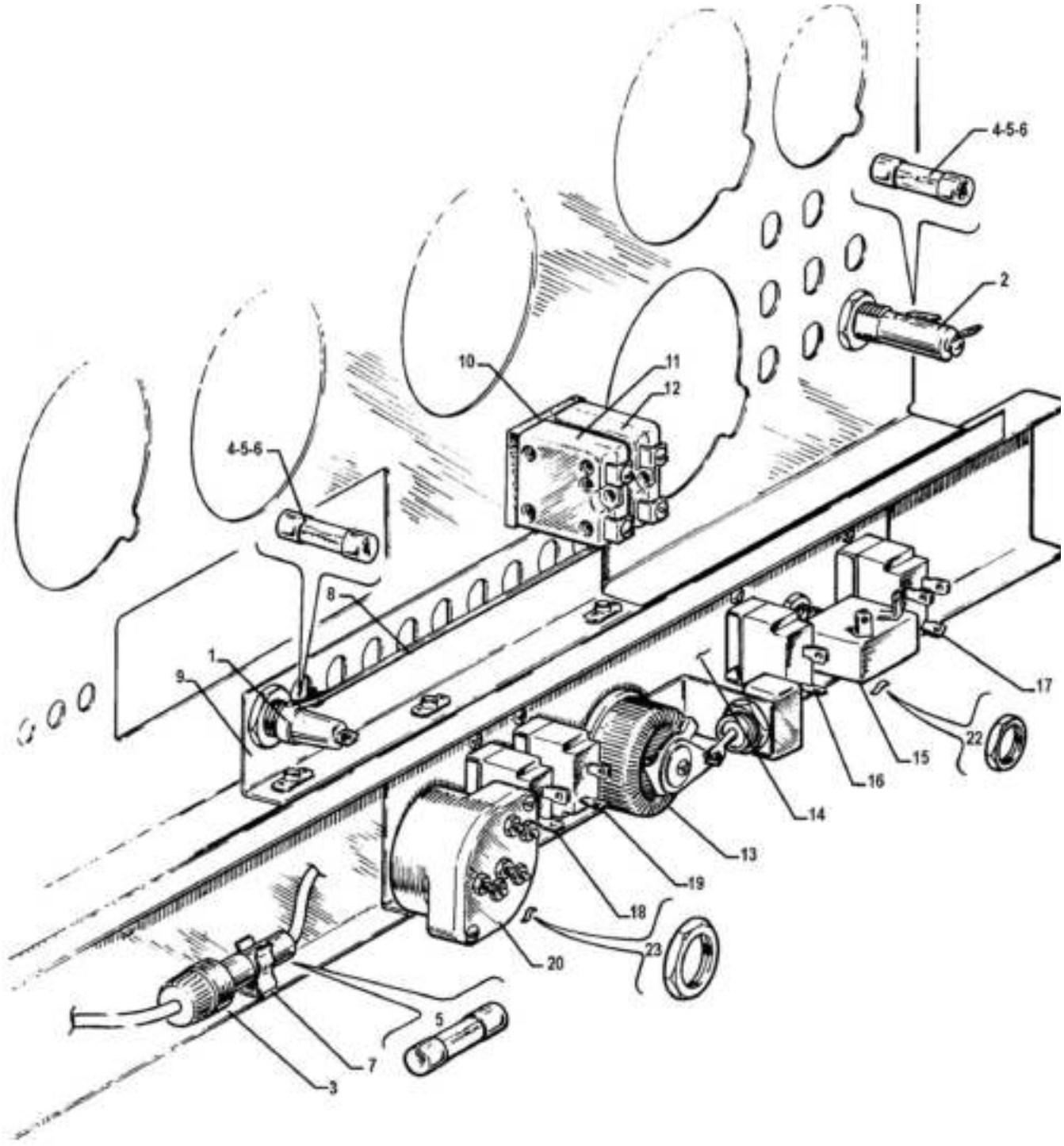

Figure 100. Instrument Panel Electrical Installation
(PA-32-260 - Serial Nos. 32-1 to 32-1110 inclusive)
(PA32-300 - Serial Nos. 32-40000 to 32-40565 inclusive)

CODE EXPLANATIONS FOR FIGURE 100

A - Used on PA32-260 with serial numbers 32-1 to 32-1110 inclusive, and PA-32-300 with serial numbers 32-40000 to 32-40565 inclusive.
B - If matching switch and door locks are desired, order Kit 470 712.
C - Optional equipment.

PIPER PARTS CATALOG

Figure and Index Number	Part Number	Code	NOMENCLATURE	No. Req.	SERIAL NUMBERS AFFECTED
100-	68806		DRAWING - Harness Installation		
-1	465 256		HOLDER - Fuse (HKP - GG)	9	
-2	465 257		HOLDER - Fuse (342001)	5	
-3	465 258		HOLDER - Fuse (155020)	3	
-4	461 623		FUSE - 5 Ampere (AGC-5)	9	
-5	461 622		FUSE - 10 Ampere (AGC-10)	6	
-6	461 621		FUSE - 15 Ampere (AGC-15)	2	
-7	454 873		CLIP - Fuse holder (125002)	3	
-8	63080-00		BAR - Terminal, fuse holder	1	
-9	62403-00		ANGLE ASSEMBLY - Fuse holder	1	
-10	68808-00		SPACER - Insulating, circuit protector	2	
-11	454 700		CIRCUIT BREAKER (PS50120-1-1)	1	
-12	454 701		CIRCUIT BREAKER (PS50120-1-12)	1	
-13	18492-02	C	RHEOSTAT ASSEMBLY	1	
-14	68836-00		ANGLE ASSEMBLY - Switch mounting	1	
-15	487 844		SWITCH - Starter (91100)	1	
-16	99377-02		SWITCH - Fuel pump (8911K578)	1	
-17	487 868		SWITCH - Master (8911K577)	1	
-18	99377-06		SWITCH - Anti-collision (8911K659)	1	
-19	99377-03		SWITCH - Landing Light (8911K580)	1	
-20	752 892	B	SWITCH ASSEMBLY - ignition (10-357290-1)	1	
-21	--- ---		DELETED		
-22	406 666		NUT - (RE5832)	1	
-23	406 667		NUT - (RZ001465)	1	

When ordering, always specify Part Number, Description, and Serial Number of Aircraft

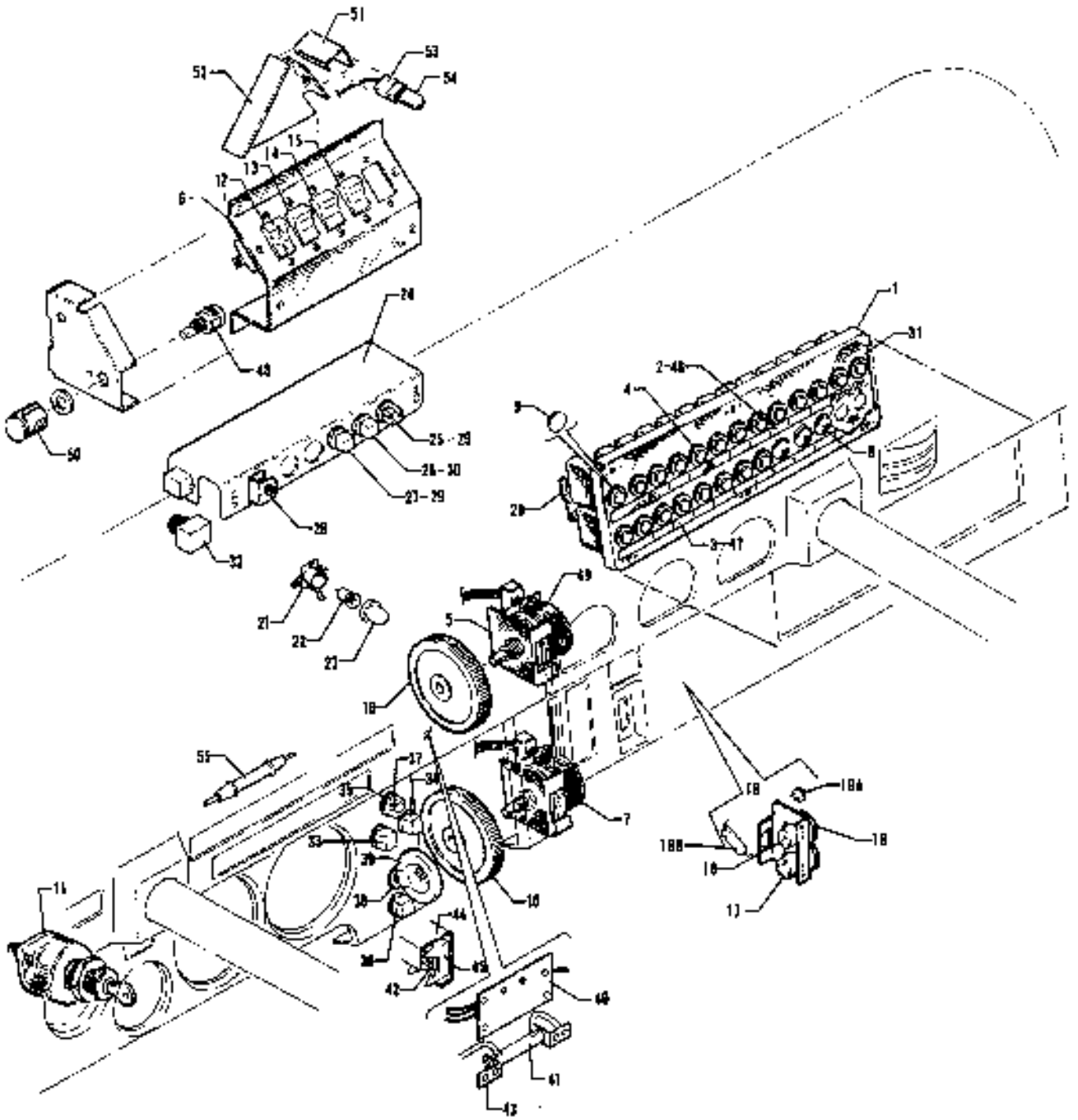

Figure 101 Instrument Panel Electrical Installation
(PA-32-260 - Serial Nos 32-1111 and up)
(PA-32-300 - Serial Nos 32-40566 and up)
(PA-32R-300 - Serial Nos 32R-7680001 and up)

CODE EXPLANATIONS FOR FIGURE 101

A - Used on PA-32-260 with serial numbers 32-1111 and up, PA-32-300 with serial numbers 32-40566 and up, and PA-32R-300.
B - Used on PA-32-260 with serial numbers 32-7100001 and up, PA-32-300 with serial numbers 32-7140001 and up, and PA-32R-300.
C - If matching ignition switch and door locks are desired, order kit No. 470 729.
D - Used on PA-32-260 with serial numbers 32-7200001 to 32-7300076 inclusive, and PA-32-300 with serial numbers 32-7240001 to 32-7340201 inclusive.
E - Used on PA-32-260 with serial numbers 32-7400001 and up, PA-32-300 with serial numbers 32-7440001 and up, and PA-32R-300.
F - See Figure 106 if wing tip strobe lights are installed on PA-32-260 and PA-32-300 only.
G - Used on PA-32-260 with serial numbers 32-1111 to 32-7300076 inclusive, and PA-32-300 with serial numbers 32-40566 to 32-7340201 inclusive.
H - Used on PA-32-260 with serial numbers 32-1111 to 32-7100038 inclusive, and PA-32-300 with serial numbers 32-40566 to 32-7140086 inclusive.
J - Used on PA-32-260 with serial numbers 32-7400001 to 32-7400061 inclusive, and PA-32-300 with serial numbers 32-7440001 to 32-7440182 inclusive.
K - Used on PA-32-260 with serial numbers 32-7500001 and up, and PA-32-300 with serial numbers 32-7540001 and up.
L - Used on PA-32R-300 only.
M - Used on PA-32-260 with serial numbers 32-7500001 and up, and PA-32-300 with serial numbers 32-7540001 and up and PA-32R-300.
N - Used on PA-32-260 with serial numbers 32-1111 to 32-1320 inclusive, and PA-32-300 with serial numbers 32-40566 to 32-41018 inclusive.
O - Used if strobe light or rotating beacon only is installed on PA-32R-300.
P - If matching ignition switch and door locks are desired, order kit No. 87329-04.
Q - Used on PA-32-260 with serial numbers 32-7600002 and up, PA-32-300 with serial numbers 32-7640030 and up, and PA-32R-300 with serial numbers 32R-7680014 and up.
R - Used on PA-32-260 with serial numbers 32-7800001 and up, PA-32-300 with serial numbers 32-7840001 and up, and PA-32R-300 with serial numbers32R-7885002 and up.
S - Used on PA-32R-300 with serial numbers 32R-7880033 and up. Also used on PA-32R-300 with serial numbers 32R-7680001 to 32R-7880032 inclusive if Gear Extension Replacement Kit 763 816V has been installed.
T - Used on PA-32-260 with serial numbers 32-1111 to 32-7600001 inclusive, PA-32-300 with serial numbers 32-40566 to 32-7640029 inclusive, and PA-32R-300 with serial numbers 32R-7680001 to 32R-7680013 inclusive.
U - Used on PA-32-260 with serial numbers 32-7400001 to 32-7700023 inclusive, PA-32-300 with serial numbers 32-7440001 to 32-7840083 incl., and PA-32R-300 with serial numbers 32R-7680001 and up.
V - Used on PA-32-260 with serial numbers 32-7800001 and up, and PA-32-300 with serial numbers 32-7840084 and up.
X - Used on PA-32-300 only.
Y - Reference latest revision to Piper Service Bulletin 475, applicable to PA-32-260 with serial numbers 32-7400001 to 32-7500039 inclusive and PA-32-300 with serial numbers 32-7440002 to 32-7540142 inclusive.
Z - Reference latest revision to Piper Service Bulletin 543. The starter/magneto switches manufactured by Bendix during the latter three months of 1976 may contain an internal defect which may cause accidental activation of the starter with the switch in a position other than “start.” On the bottom of the starter/magneto switch, adjacent to manufacturer’s part No. 10-357210-1, is a numerical/date code. If this date code is 7610, 7611 or 7612, the switch must be replaced.
AA- Reference latest revision to Piper Service Letter 758 for Bendix Ignition Repair Kit, Piper part No. 761 065.

PIPER PARTS CATALOG

Figure and Index Number	Part Number	Code	NOMENCLATURE	No. Req.	SERIAL NUMBERS AFFECTED
101-	69381	G	DRAWING - Harness Installation		
	69779	J	DRAWING - Harness Installation		
	69794	K	DRAWING - Electrical Installation		
	38004	L	DRAWING - Electrical Installation		
-1	69506-00	H	PANEL ASSEMBLY - Circuit breaker	1	
	99696-02	D	PANEL ASSEMBLY - Circuit breaker	1	
	99696-03	E	PANEL ASSEMBLY - Circuit breaker	1	
-2	99695-03	D	* PLACARD - Circuit breaker panel	1	
-3	99695-04	D	* PLACARD - Circuit breaker panel	1	
-4	454 706		CIRCUIT BREAKER - (PS50120-1-2) 5 amp (Mech.Products, Inc.)	AR	
	454 719		CIRCUIT BREAKER - (PS50120-1-3) 7.5 amp (Mech.Products, Inc.)	AR	
	454 707		CIRCUIT BREAKER - (PS50120-1-5) 10 amp (Mech.Products, Inc.)	AR	
	454 708		CIRCUIT BREAKER - (PS50120-1-7) 15 amp (Mech.Products, Inc.)	AR	
	454 710		CIRCUIT BREAKER - (PS50120-1-11) 25 amp (Mech.Products, Inc.)	AR	
	454 668	X	CIRCUIT BREAKER - (PS50120-3-8) 5 amp (Wood Electric Corp.)	AR	32-7940254 and up
	454 669	X	CIRCUIT BREAKER - (PS50120-3-13) 10 amp (Wood Electric Corp.)	AR	32-7940254 and up
	454 670	X	CIRCUIT BREAKER - (PS50120-3-15) 15 amp (Wood Electric Corp.)	AR	32-7940254 and up
	454 678	X	CIRCUIT BREAKER - (PS50120-3-11) 7.5 amp (Wood Electric Corp.)	AR	32-7940254 and up
-5	69351-00	G	MOUNT - Rheostat	2	
-6	69346-00		PLATE ASSEMBLY - SWITCH	1	
-7	68812-04	G	RHEOSTAT ASSEMBLY - Cockpit light	1	
-8	453 602		BUTTON - Plug (SS48152)	20	
-9	453 766		BUTTON - Plug (SS48154)	1	
-10	66748-00	G	KNOB - Rheostat	2	
-11	757 597	C,T,Z, AA	SWITCH - Ignition (10-357210-1)	1	
	688 178	P,Q,AA	SWITCH - Ignition (10-357200-1)	1	
-12	99377-05		SWITCH - Main	1	
-13	99377-02		SWITCH - Fuel pump (8911K578)	1	
-14	99377-06	F,O	SWITCH - Strobe light (8911K659)	1	
	99377-07	L	SWITCH - Strobe light and rotating beacon (8911K660)	1	32R-7680181 and up
-15	99377-03		SWITCH - Landing light (8911K580)	1	
-16	79203-02	J,Y	CONTROL ASSEMBLY - Dimmer	1	
	37399-02	M,Y	CONTROL ASSEMBLY - Dimmer	1	
-17	67436-04	E	* SWITCH - Potentiometer	1	
-18	67436-06	E	* SWITCH - Potentiometer	1	
-19	67437-00	E	* KNOB - Potentiometer	2	
-19a	489 440	E	* TRANSISTOR - (2N3055)	2	
-19b	484 498	E	* RESISTOR - (22 ohm, 1 watt)	2	
-20	66744-00	N	STRIP - Circuit breaker	1	
	67412-04	B	STRIP - Circuit breaker	1	
-21	565 516	M	HOLDER ASSEMBLY - Instrument light (PS10082-1-1)	14	
-22	472 056	M	LAMP - (53) Clear	18	
-23	460 602	M	FILTER - Lunar white (1813-26)	14	
-24	79333-00	M	PANEL ASSEMBLY - Annunciator	1	
-25	67422-12	M	* LIGHT - Indicator (OIL)	1	
-26	67422-14	M	* LIGHT - Indicator (ALT)	1	

When ordering, always specify Part Number, Description, and Serial Number of Aircraft

PIPER PARTS CATALOG

Figure and Index Number	Part Number	Code	NOMENCLATURE	No. Req.	SERIAL NUMBERS AFFECTED
101-27	67422-13	M	* LIGHT - Indicator (VAC)	1	
-28	487 904	M	* SWITCH - (39-1)	1	
-29	472 054	M	* BULB - (PS10008-330)	2	
-30	453 695	M	* BULB - (PS10008-328)	1	
-31	67409-00		SPACER - Circuit breaker	1	
-32	67422-11	L	LIGHT - Indicator (warning gear unsafe)	1	
-33	67442-05	L	LIGHT - Indicator (left gear)	1	
-34	67422-06	L	LIGHT - Indicator (right gear)	1	
-35	67422-07	L	LIGHT - Indicator (nose gear)	1	
-36	67422-10	L	LIGHT - Indicator (auto extender off)	1	
-37	472 054	L	BULB - (PS10008-330)	5	
-38	487 936	L	SWITCH - Landing gear (8906K1385)	1	
-39	67439-00	L	KNOB - Landing gear switch	1	
-40	38255-02		BLOCK ASSEMBLY	1	
-41	63866-03	L	RESISTOR ASSEMBLY - Gear indicator lights	1	
-42	35207-00	L	BAR - Bus, terminal strip	1	
-43	63222-00	L	CLIP - Resistor assembly	2	
-44	79205-00	L	COVER - Terminal strip	1	
-45	588 432	L	STRIP - Terminal (MS25123-1-4B)	1	
-46	99695-16	U	PLACARD - Circuit breaker panel	1	
	35669-60	V	PLACARD - Circuit breaker panel	1	
-47	69669-93	U	PLACARD - Circuit breaker panel	1	
	35669-61	V	PLACARD - Circuit breaker panel	1	
-48	95228-03	R	DIMMER ASSEMBLY - Switch panel	1	
-49	68812-03	G	RHEOSTAT ASSEMBLY - Cockpit light	1	
-50	571 162	R	KNOB - Dimmer (RB-67-SB-M)	1	
-51	37999-02	R	SHIELD - Lamp switch	1	
-52	37998-02	R	SHIELD - Light assembly	1	
-53	69960-02	R	SOCKET ASSEMBLY - Panel light	1	
-54	472 081	R	LAMP - (PS10008-658)	1	
-55	38149-05	S	FLASHER ASSEMBLY - Gear warning	1	

When ordering, always specify Part Number, Description, and Serial Number of Aircraft

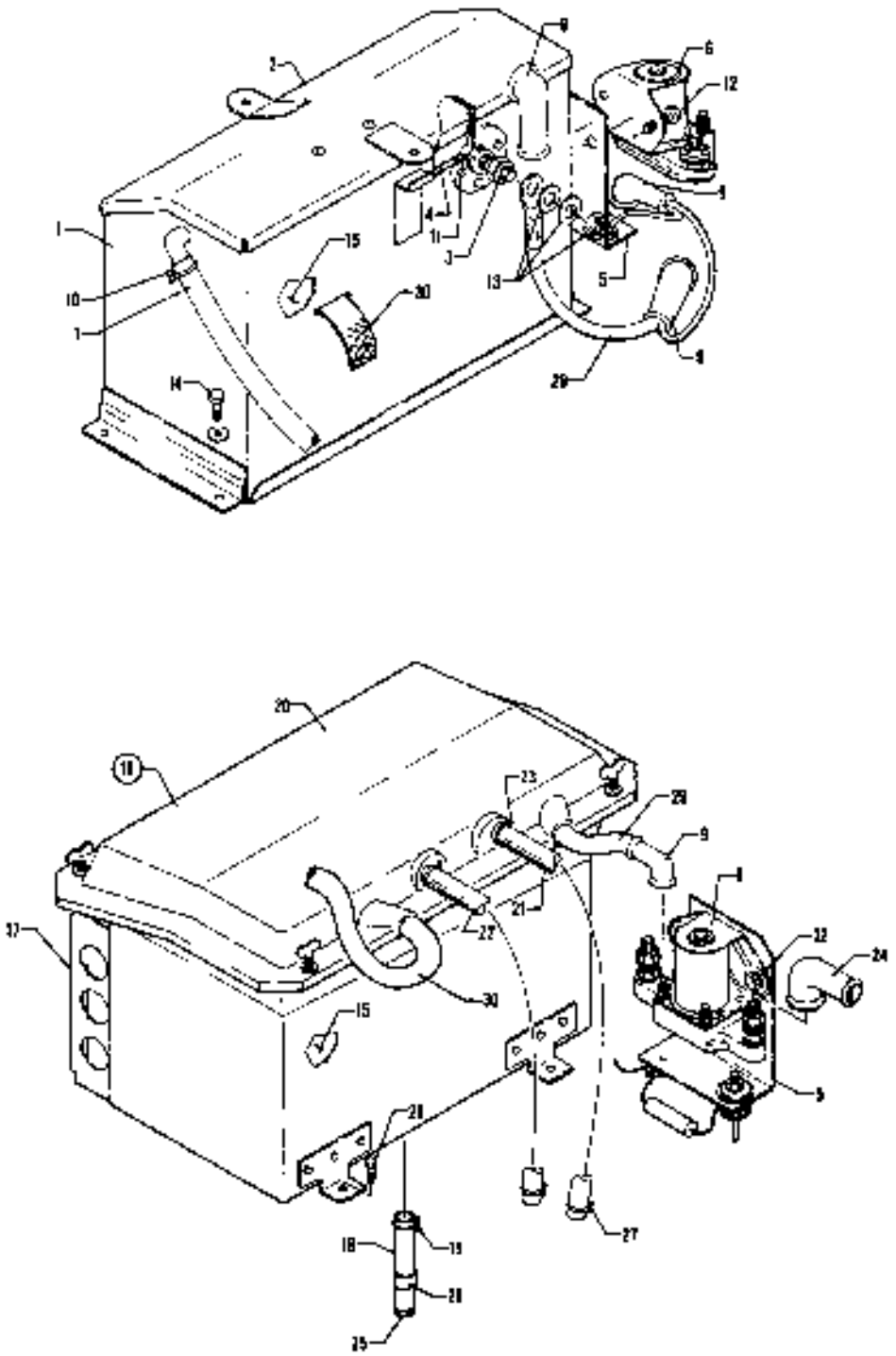

Figure 102 Battery Box Installation

CODE EXPLANATIONS FOR FIGURE 102

A - Used on PA-32-260 with serial numbers 32-1 to 32-1110 inclusive, and PA-32-300 with serial numbers 32-40000 to 32-40565 inclusive.
B - Used on PA-32-260 with serial numbers 32-1111 to 32-7400081 inclusive, and PA-32-300 with serial numbers 32-40566 to 32-7440182 inclusive.
C - Used on PA-32-260 with serial numbers 32-7500001 and up, and PA-32-300 with serial numbers 32-7540001 and up.
D - Used on PA-32R-300 only.
E - Used on PA-32-260 and PA-32-300 only.
W - These parts must be ordered from Service Spares Department, Piper Aircraft, Lock Haven, Penna.

PIPER PARTS CATALOG

Figure and Index Number	Part Number	Code	NOMENCLATURE	No. Req.	SERIAL NUMBERS AFFECTED
102-	62800	A	DRAWING - Electrical System Installation		
	62980	B	DRAWING - Electrical System Installation		
	62794	C	DRAWING - Electrical System Installation		
	38064	D	DRAWING - Electrical System Installation		
-1	62802-00	E	BOX ASSEMBLY - Battery	1	
-2	63877-00	E	LID ASSEMBLY - Battery box	1	
-3	66615-00	E	TERMINAL ASSEMBLY	1	
-4	17566-00	C,W	PLATE	1	
-5	62279-00		DIODE ASSEMBLY - Master relay	1	
-6	465 161	W	RELAY - Power	1	
-7	63904-07	E	HOSE - Battery vent, outboard	1	
	63904-13	E	HOSE - Battery vent, inboard	1	
-8	23969-05	E,W	NIPPLE	2	
-9	23969-02	E,W	NIPPLE	2	
-10	454 983	E,W	CLAMP - (SAE TY E8)	4	
-11	81342-68	E	WASHER - Terminal, battery box	1	
-12	401 307	W	BOLT - (AN4-4A)	2	
	407 565	W	WASHER - (AN960-416)	2	
-13	404 638	E,W	NUT - (AN3406516)	2	
	407 586	E,W	WASHER - (AN960-516L)	2	
	407 568	E,W	WASHER - (AN960-516)	1	
	407 106	E,W	WASHER - (AN935-516)	1	
-14	401 306	E,W	BOLT - (AN3-4A)	4	
	407 564	E,W	WASHER - (AN960-10L)	4	
-15	460 030	W	BATTERY - (525) 25 Ampere hour	1	
	460 035	W	BATTERY - (R35) 35 Ampere hour	1	
-16	38062-02	D	BOX ASSEMBLY - Battery	1	
-17	38062-10	D	BRACKET ASSEMBLY - Mounting	2	
-18	63904-86	D	HOSE - Drain	1	
-19	454 983	D,W	CLAMP - (SAE TY E8)	1	
-20	38062-04	D	LID ASSEMBLY - Battery box	1	
-21	63904-64	D	HOSE - Battery vent, left	1	
-22	63904-97	D	HOSE - Battery vent, right	1	
-23	454 983	D,W	CLAMP - (SAE TY E8)	2	
-24	68580-02	D	NIPPLE	2	
-25	582 199	D	PLUG - (PD401	1	
-26	453 831	D,W	BUSHING - Snap (PS10064-887-8)	1	
-27	454 983	D,W	CLAMP - (SAE TY E8)	2	
-28	401 308	D,W	BOLT - (AN3-4A)	6	
-29	68807-04	E	WIRE ASSEMBLY - Positive (9.50")	1	
	69325-130	D	WIRE ASSEMBLY - Positive (10.00")	1	
-30	63680-02	E	CABLE ASSEMBLY - Ground (12.38")	1	
	69325-129	D	WIRE ASSEMBLY - Ground (10.50")	1	

When ordering, always specify Part Number, Description and Serial Number of Aircraft

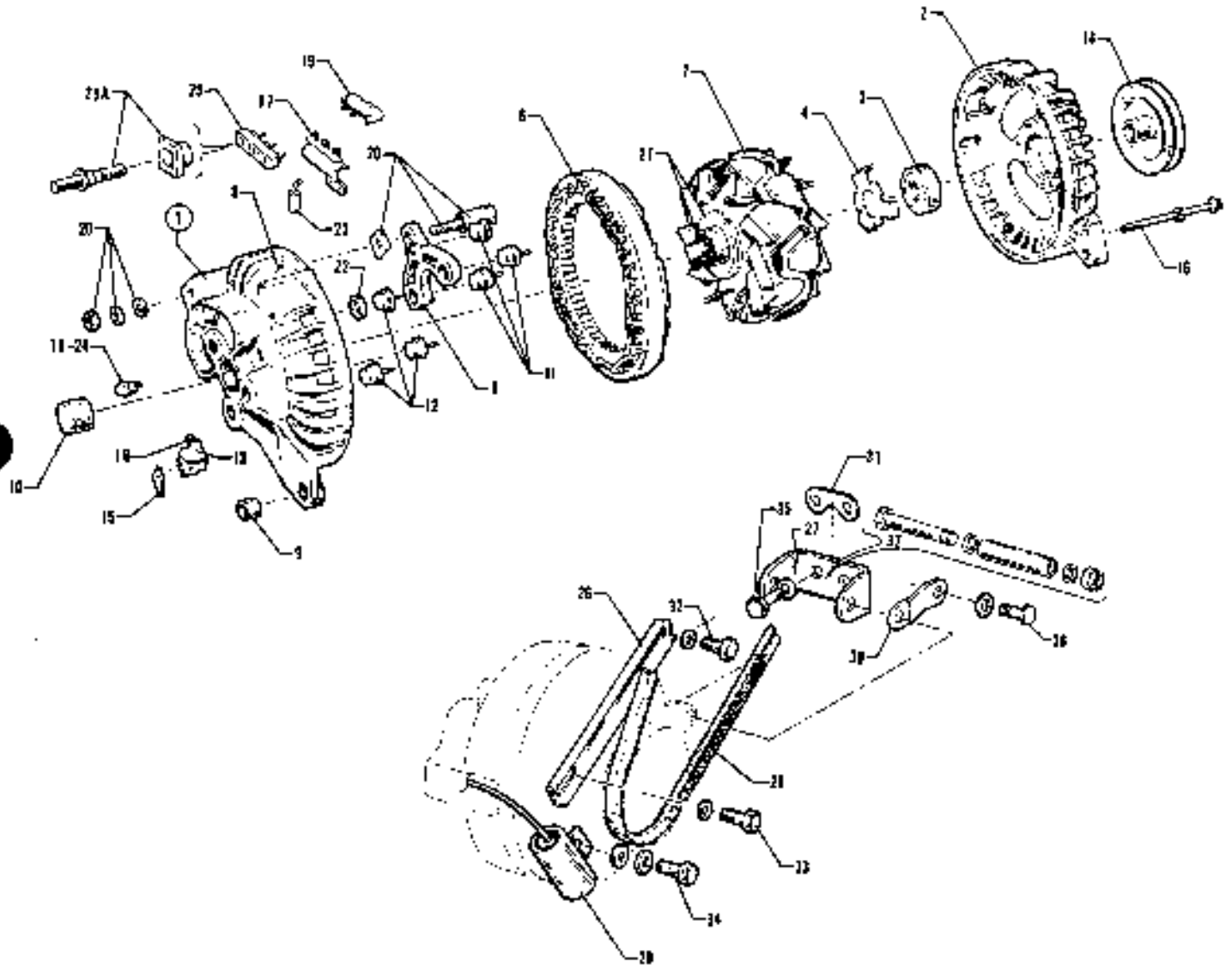

Figure 103 Alternator Installation (Chrysler)

CODE EXPLANATIONS FOR FIGURE 103

A - Refer to Figure 42 and 108 if Air Conditioning is installed.
B - Used on PA-32-300 and PA-32R-300.
C - Used with Alternator Assembly P/N 451 892 (Chrysler No. 2642997) only. P/N 758-251 no longer available.
D - Used with Alternator Assemblies P/N 99945-00 and 99945-03 (Chrysler No. 3656624) only.
E - Used on PA-32-260 with serial numbers 32-1 to 32-7400061 inclusive, and PA-32-300 with serial numbers 32-40000 to 32-7440182 inclusive.
F - Used on PA-32-260 with serial numbers 32-7500001 and up, PA-32-300 with serial numbers 32-7540001 to 32-7940028 inclusive, and PA-32R-300.
G - Used on PA-32-260 only.
H - Used on PA-32-260 with serial numbers 32-7300061 and up, PA-32-300 with serial numbers 32-7340167 and up, and PA-32R-300. Also used on PA-32-260 with serial numbers 32-1 to 32-7300060 inclusive, and PA-32-300 with serial numbers 32-40000 to 32-7340166 inclusive if Alternator Installation Modification Kit 760 742 has been installed.
J - Used on PA-32-260 with serial numbers 32-1 to 32-7300060 inclusive, and PA-32-300 with serial numbers 32-40000 to 32-7340166 incl.
K - Used on PA-32-300 only.
L - Used with Alternator Assembly P/N 451 892 (Chrysler No. 2642997), 99945-00 and 99945-03 (Chrysler No. 3656624) only.
M - Used on PA-32-260 with serial Nos. 32-1 and up, PA-32-300 with serial Nos. 32-40000 to 32-7940184 incl., and PA-32R-300 with serial Nos. 32R-7680001 and up.
N - Reference latest revision to Piper Service Bulletin 449, applicable to PA-32-260 with serial numbers 32-7500015 incl., and PA-32-300 with serial numbers 32-7540001 to 32-7540090 incl. Assure resistor assembly 69660-00 and clamp 454-960 have been removed and that terminal 588 398 has been installed on alternator output wire. Also reference Piper Service Bulletin 357A for improved heavy duty terminal 588 398.

PIPER PARTS CATALOG

Figure and Index Number	Part Number	Code	NOMENCLATURE	No. Req.	SERIAL NUMBERS AFFECTED
103-	99935		DRAWING - Alternator Installation		
-1	69670-00	E	ALTERNATOR ASSEMBLY - (Chrysler No. 3656624)	1	
	69670-03	F,N	ALTERNATOR ASSEMBLY - (Chrysler No. 3656624)	1	
	69670-04	K,N	ALTERNATOR ASSEMBLY - (Chrysler No. 4111810)	1	32-7940029 and up
-2	756 159	L	* SHIELD ASSEMBLY - Drive end (2098634)	1	
-3	753 375	L	* BEARING - Drive end shield (2098478)	1	
-4	755 846	L	* PLATE - Bearing retainer (2095012)	1	
-5	751 955	C	* HEAT SINK - Rectifier (2095925)	1	
-6	756 250	C	* STATOR ASSEMBLY - (3656400)	1	
	757 745	D	* STATOR ASSEMBLY - (3438768)	1	
-7	755 943	C	* ROTOR ASSEMBLY - (2642195)	1	
	757 065	D	* ROTOR ASSEMBLY - (3656632)	1	
-8	760 928	C	* SHIELD ASSEMBLY - Rectifier end (2098646)	1	
	757 746	D	* SHIELD ASSEMBLY - Rectifier end (3438712)	1	
-9	753 380	C	* BUSHING - Alternator end shield (2095052)	1	
	758 249	D	* BUSHING - Alternator end shield (2098052)	1	
-10	753 376	L	* BEARING - Rectifier end shield (2098512)	1	
-11	755 944	C	* RECTIFIER - Positive (3000046)	3	
-12	755 945	C	* RECTIFIER - Negative (3000047)	3	
-13	751 956	C	* HOLDER - Brush (2095038)	1	
	758 369	D	* HOLDER - Brush (3438159)	1	
-14	757 311	L	* PULLEY ASSEMBLY - (2642706)	1	
-15	753 039	C	* TERMINAL - Field (2098642)	1	
-16	756 757	L	* KIT - (3) frame screws and (3) lock washers (2448261)	1	
-17	756 066	D	* RECTIFIER ASSEMBLY - Positive (3438727)	1	
-18	757 142	L	* KIT - Brush and insulator assembly (2084673)	1	
-19	756 067	D	* RECTIFIER ASSEMBLY - Negative (3438721)	1	
-20	756 759	C	* KIT - Internal capacitor and insulator (2421137)	1	
-21	757 143	C	* KIT - Rotor grease retainer, washer and slip ring (2586512)	1	
-22	756 761	C	* KIT - Rectifier heat sink spacers (2421138)	1	
-23	757 981	D	* CAPACITOR - (3438725)	1	
-24	758 251	C	* BRUSH ASSEMBLY PACKAGE - Horizontal (3420983)	1	
	758 368	D	* BRUSH ASSEMBLY PACKAGE - Horizontal (3837172)	1	
-25	761 913	D	* TERMINAL BLOCK - (3438729)	1	
-25a	758 366	L	* BATTERY TERMINAL PACKAGE - (3620794)	1	
-26	63531-00		CHANNEL - Alternator support	1	
-27	65199-00		BRACKET - Alternator support	1	
-28	452 541	G	BELT - "V" (8114-1814)	1	
	452 686	B	BELT - "V" (8114-3659)	1	
-29	63897-06		CAPACITOR ASSEMBLY	1	
-30	78483-00	H	STRUT - Alternator	1	
-31	582 172	H	PLATE - Lock (73383)	1	
-32	401 970		BOLT - (MS20074-05-05)	1	
	407 137		WASHER - (AN936-A516)	1	
-33	401 971		BOLT - (MS20074-05-06)	1	
	407 566		WASHER - (AN960-516)	2	
	407 137		WASHER - (AN936-A516)	1	
-34	401 971	M	BOLT - (MS20074-05-06)	1	
	401 970	K	BOLT - (MS20074-05-05)	1	32-7940185 and up
	407 566	M	WASHER - (AN960-516)	6	
	407 566	K	WASHER - (AN960-516)	2	32-7940185 and up

When ordering, always specify Part Number, Description, and Serial Number of Aircraft

PIPER PARTS CATALOG

Figure and Index Number	Part Number	Code	NOMENCLATURE	No Req	SERIAL NUMBERS AFFECTED
103-35	401 970		BOLT - (MS20074-05-05)	2	
	407 137	J W	WASHER - (AN936-A516)	2	
-36	401 971	H	BOLT - (MS20074-05-06)	1	
	62833-74	H	WASHER	1	
-37	764 092		ALTERNATOR MOUNTING HARDWARE KIT	1	

2J23 THRU 2J24

INTENTIONALLY LEFT BLANK

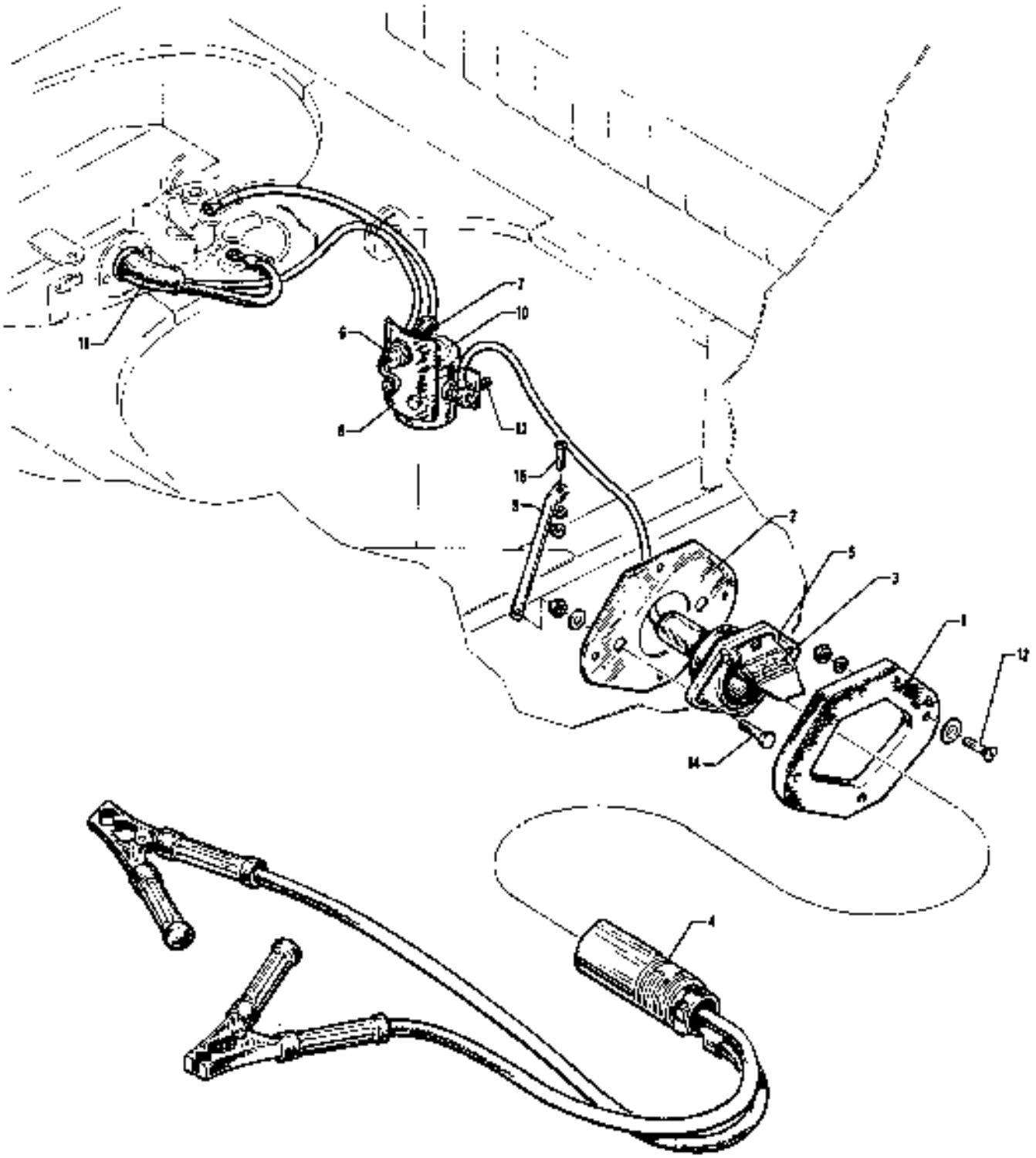

Figure 104. External Power Supply Installation

CODE EXPLANATIONS FOR FIGURE 104

PIPER PARTS CATALOG

Figure and Index Number	Part Number	Code	NOMENCLATURE	No. Req.	SERIAL NUMBERS AFFECTED
104-	68196		DRAWING - External Power Supply Installation		
-1	62226-00		SPACER - Auxiliary power receptacle	1	
-2	62227-00		PLATE - Auxiliary power receptacle	1	
-3	69669-173		PLACARD - External power	1	
-4	89097-02		PLUG ASSEMBLY - Power connector	1	
-5	89097-04		SOCKET ASSEMBLY - Power connector	1	
-6	456 728		DIODE - (IN3208)	1	
-7	476 673		NIPPLE - (MS25171-1S)	1	
-8	68198-00		SUPPORT - Diode	1	
-9	68195-00		TUBE - Support	1	
-10	484 373		RELAY - Power (24059)	1	
-11	66580-02		BOOT - (476 695)	1	
-12	416 794		SCREW - (AN507-1032R14)	4	
	494 087		WASHER - (A3235-020-1)	4	
	407 564		WASHER - (AN960-10)	4	
	404 835		NUT - (MS20364-1032C)	4	
-13	401 307		BOLT - (AN4-4A)	2	
	407 565		WASHER - (AN960-416)	2	
	404 888		NUT - (MS20365-428C)	2	
-14	400 728		BOLT - (AN25-11A)	2	
	407 566		WASHER - (AN960-516)	2	
	407 106		WASHER - (AN935-516)	2	
	404 323		NUT - (AN316-5R)	2	
-15	416 995		SCREW - (AN526-1032R8)	1	
	407 106		WASHER - (AN935-516)	1	
	404 323		NUT - (AN316-5R)	1	

When ordering, always specify Part Number, Description, and Serial Number of Aircraft

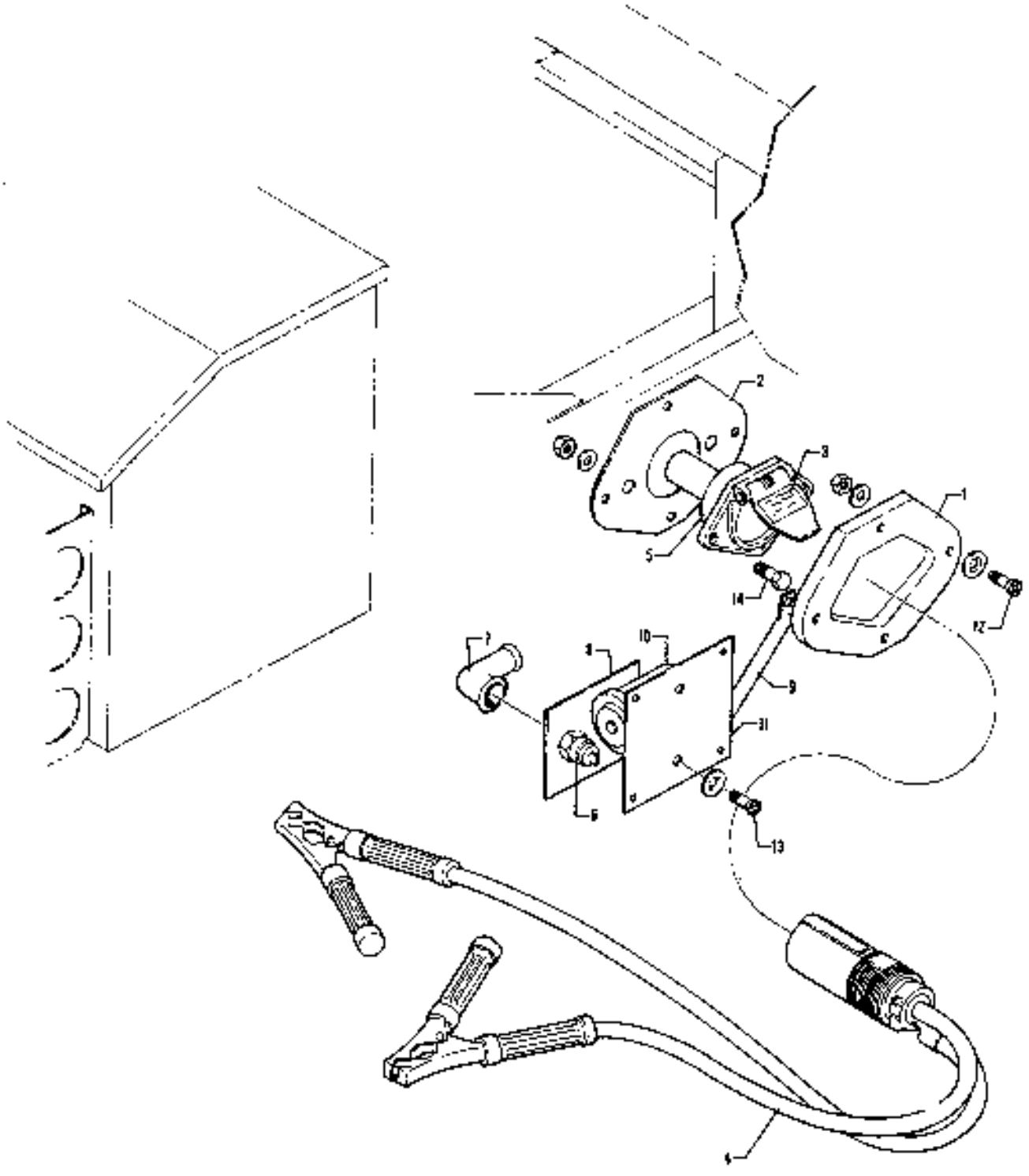

Figure 105. External Power Supply Installation

CODE EXPLANATIONS FOR FIGURE 105

W - These parts must be ordered from Service Spares Department, Piper Aircraft, Lock Haven, Penna.

PIPER PARTS CATALOG

Figure and Index Number	Part Number	Code	NOMENCLATURE	No. Req.	SERIAL NUMBERS AFFECTED
105-	38143		DRAWING - External Power Supply Installation		
-1	62226-00	W	SPACER - Auxiliary power receptacle	1	
-2	62227-00	W	PLATE - Auxiliary power receptacle	1	
-3	69668-173		PLACARD - External power	1	
-4	62356-02	W	PLUG ASSEMBLY - Power connector	1	
-5	62355-03		SOCKET ASSEMBLY - Power connector	1	
-6	466 728	W	DIODE - (1N3208)	1	
-7	476 673	W	NIPPLE - (MS25171-15)	1	
-8	58196-00		SUPPORT - Diode	1	
-9	38143-04		TUBE - Support	1	
-10	484 373	W	RELAY - Power (24058)	1	
-11	38143-03		PLATE - Relay support	1	
-12	416 794	W	SCREW - (M92468S275)	4	
	494 087	W	WASHER - (A3235-020-1)	4	
	407 564	W	WASHER - (AN960-10)	4	
	404 835	W	NUT - (MS20364-1032C)	4	
-13	416 786		SCREW - (MS24683S272)	2	
	494 087	W	WASHER - (A3235-020-1)	2	
	407 800	W	WASHER - (AN970-3)	2	
	404 887	W	NUT - (MS20365-1032C)	2	
-14	401 185	W	BOLT - (AN5-5A)	2	
	407 566	W	WASHER - (AN960-516)	2	
	404 837	W	NUT - (MS20364-524C)	2	

When ordering, always specify Part Number, Description and Serial Number of Aircraft

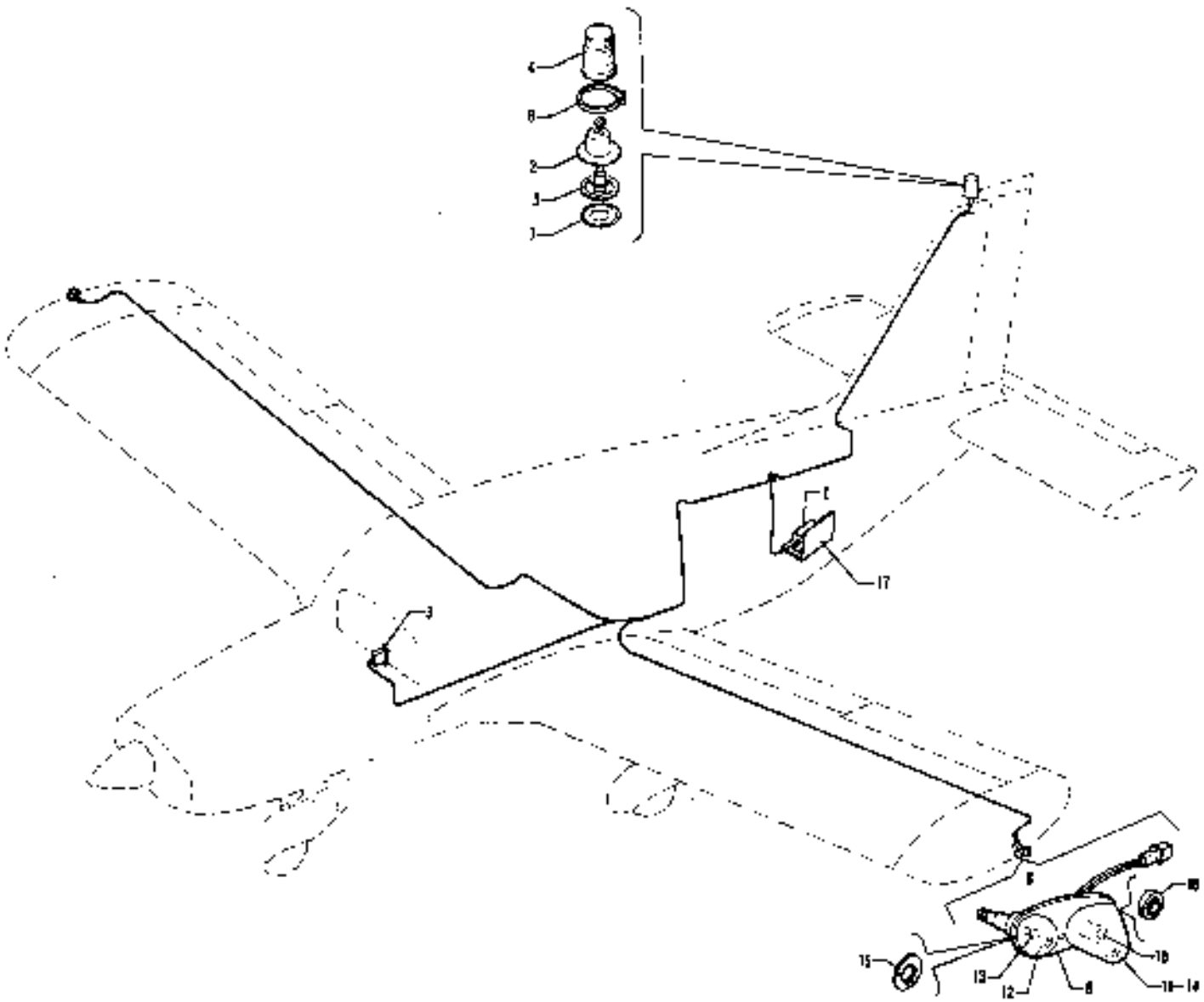

Figure 106 Strobe Lights Installation

CODE EXPLANATIONS FOR FIGURE 108

A Used on PA-32-260 with serial numbers 32-1251 and up, and PA-32-300 with serial numbers 32-40851 and up
B - Used if white strobe wing tip lights are not installed
C - Used if white strobe wing tip lights are installed
D - Must be used if an A.D.F. Radio installation is installed
E - Used on PA-32-300 only
F Used with white wing tip strobe only
G - Used with red wing tip strobe only
W - These parts must be ordered from Service Spares Department © par Aircraft, Lock Haven, Penna

PIPER PARTS CATALOG

Figure and Index Number	Part Number	Code	NOMENCLATURE	No. Req	SERIAL NUMBERS AFFECTED
106-	99030	A	DRAWING - Strobe Lights Installation		
	79850	E	DRAWING - External Wing and Fin Lighting Installation		32-7940012 and up
1	481 214	B,W	POWER SUPPLY - Strobe light	1	
	763 469	C,W	POWER SUPPLY - Strobe light	1	
-2	757 762	W	LIGHT ASSEMBLY - Strobe, fin (unshielded)	1	
	761 160	D,W	LIGHT ASSEMBLY - Strobe, fin (shielded)	1	
3	99377-06	B	SWITCH - Strobe light	1	
	99377-07	C	SWITCH - Strobe light	1	
-4	761 167		LENS - Strobe light, red (unshielded)	1	
	761 190	J	LENS - Strobe light, red (shielded)	1	
-5	755 042	W	GASKET - Strobe light	1	
6	755 200	W	CLAMP ASSEMBLY - Ring	1	
-7	751 312		ADAPTER - Mounting plate	1	
-8	761 158	W	LIGHT ASSEMBLY - Red navigation and white strobe wing tip (unshielded)	1	
	472 896	D	LIGHT ASSEMBLY - Red navigation and white strobe, wing tip (shielded)	1	
	472 988	D,F	LIGHT ASSEMBLY - Red navigation and red strobe wing tip (shielded)	1	32-7940012 and up
	761 159		LIGHT ASSEMBLY - Green navigation and white strobe, wing tip (unshielded)	1	
	472 895	D	LIGHT ASSEMBLY - Green navigation and white strobe wing tip (shielded)	1	
	472 887	D,E	LIGHT ASSEMBLY - Green navigation and red strobe, wing tip (shielded)	1	32-7940012 and up
-9	766 037	W	* RETAINER - Unshielded light lens	1	
-10	761 156	F,W	* TUBE ASSEMBLY - Flash, tip	1	
	762 003	G,W	* TUBE ASSEMBLY - Flash, tip	1	
-11	761 157	W	* LENS - Wing tip strobe (unshielded)	1	
-12	751 202	W	* LENS - Navigation, red	1	
	751 201	W	* LENS - Navigation, green	1	
-13	751 381	W	* BULB - (1512)	1	
-14	761 162	F,W	* LENS AND RETAINER ASSEMBLY - Wing tip strobe (shielded)	1	
	761 222	G	* LENS AND RETAINER ASSEMBLY - Wing tip strobe (shielded)	1	
-15	765 075	W	* GASKET - Navigation light (W1283)	1	
-16	755 078	W	* GASKET - Wing Strobe (A 427-4)	1	
-17	99031-00		BRACKET ASSEMBLY - Power supply mounting	1	

When ordering, always specify Part Number, Description and Serial Number of Aircraft

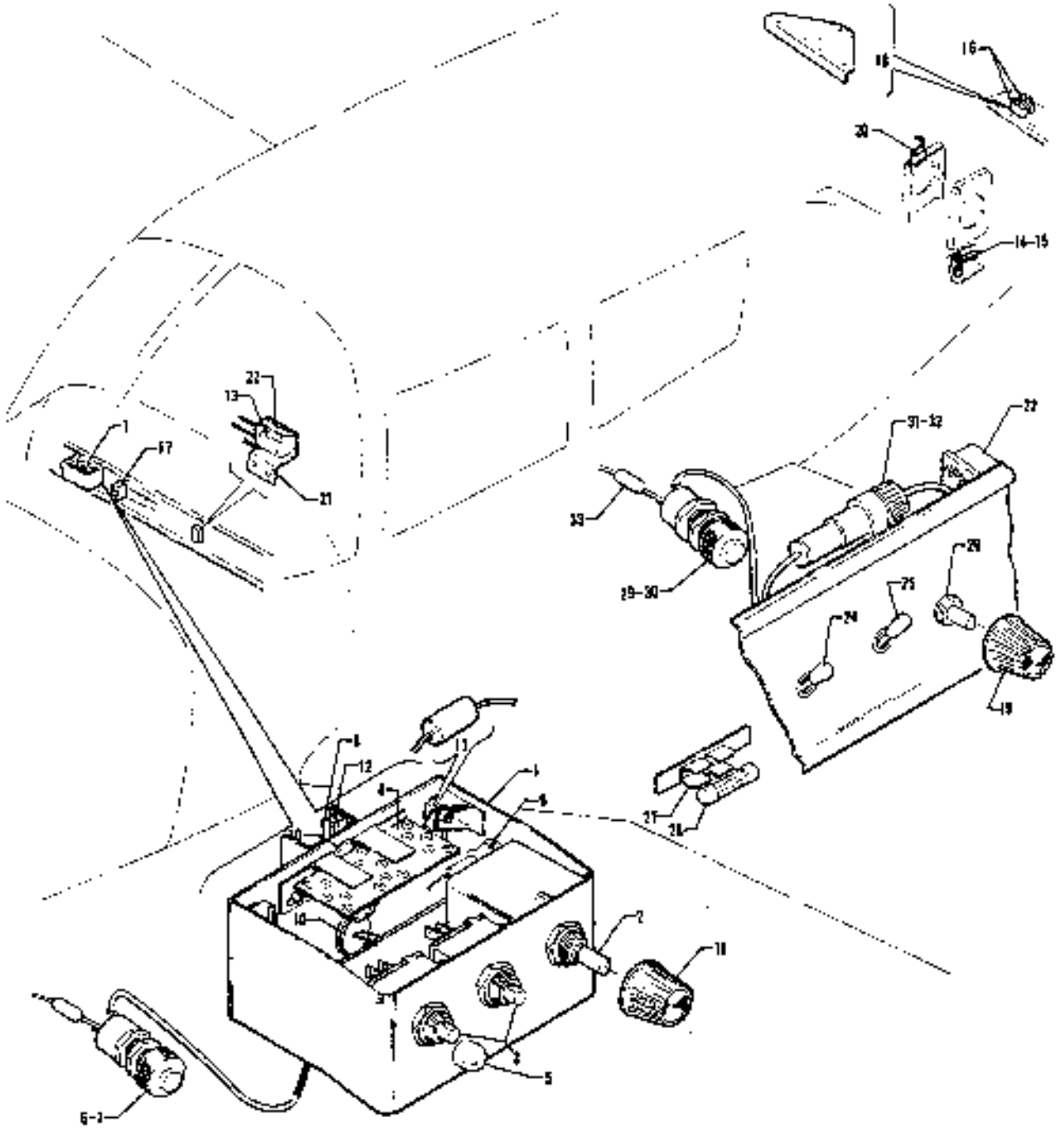

Figure 107. Air Conditioning Electrical Installation
(PA-32-300 - Serial Nos. 32-40653, 32-7240056 and up)
(PA-32R-300 - Serial Nos. 32R-7680001 and up)

CODE EXPLANATIONS FOR FIGURE 107

A - Used on PA-32-300 with serial numbers 32-40853, 32-7240056 and up, and PA-32R-300 with serial numbers 32R-7680001 and up
B - No longer available. Order Air Condition Control System Modification Kit 760 756 as a replacement. If Air Conditon Control System Modification Kit 760 756 has previously been installed, order individual items as desired (ref items 23 thru 33 incl.)
C - Used on PA-32-300 with serial numbers 32-40853, 32-7240056 to 32-7340042 inclusive
D - Used on PA-32-300 with serial numbers 32-40853, 32-7240056 to 32-7240080 inclusive
E - Used on PA-32-300 only
F - Used on PA-32R-300 only
G - Used on PA-32-300 with serial numbers 32-7240081 and up, and PA-32R-300 with serial numbers 32R-7680001 and up. Also used on PA-32-300 with serial numbers 32-40853, 32-7240056 to 32-7240080 incl. if existing air conditioning condenser transmission includes a switch mounting rod with two limit switches
H - Used on PA-32-300 with serial numbers 32-7340043 and up, and PA-32R-300. Also used on PA-32-300 with serial numbers 32-40853, 32-7240056 to 32-7340042 incl. if Air Condition Control Sysrem Modification Kit 760 756 has been installed
J - Used on PA-32-300 with serial numbers 32-40853, 32-7240056 to 32-7840025 inclusive, and PA-32R-300 with serial numbers 32R-7680001 to 32R-7880031 inclusive. Order part for PA-32-300 with serial numbers 32-7840026 and up, and PA-32R-300 with serial numbers 32R-7880032 and up if the four position switch has previously been replaced with a three position switch
K - Used on PA-32-300 with serial numbers 32-7840026 and up, and PA-32R-300 with serial numbers 32R-7880032 and up

PIPER PARTS CATALOG

Figure and Index Number	Part Number	Code	NOMENCLATURE	No. Req	SERIAL NUMBERS AFFECTED
107-	99751	D	DRAWING - Air Conditioning Electrical Installation		
	99865	E	DRAWING - Air Conditioning Electrical Installation		32-7240081 to 32-7340042 incl
	99980	H	DRAWING - Air Conditioning Electrical Installation		
-1	99537-02	B,C	CONTROL HEAD ASSEMBLY - Air conditioning	1	
-2	99717-00	C	* THERMOSTAT - Air conditioning	1	
-3	783 815	C	* SWITCH REPLACEMENT KIT - Fan and master (4 position)	2	
	588 110	C	* SWITCH - (MS35059-21) (3 position)	2	
-4	99521-00	C	* BOARD ASSEMBLY - Diode	1	
-5	472 834	C	* LIGHT - (CM22-01-02-28)	1	
-6	472 844	C	* LIGHT - (MS25041-4)	1	
-7	472 054	C	* BULB - (PS10008-330)	1	
-8	585 418	C	* HOLDER - Fuse (342004)	2	
-9	99651-00	C	* DIODE - Control head	1	
-10	456 738	C	* DIODE - (IN3659)	2	
-11	484 222	C	* RESISTOR - (200-3, 100 ohm)	2	
-12	461 629	C	* FUSE - (311005)	3	
-13	487 925	E	SWITCH - Throttle limit (V3-1)	1	
	98094-02	F	SWITCH - Throttle limit (with actuator)	1	
-14	567 644	D	SWITCH - Close limit (BZ-R31)	1	
-15	451 631	D	ACTUATOR - Close limit switch (MC7711)	1	
-16	484 223	D	RELAY - (60-11025-D)	2	
	484 209	G	RELAY - (PS60053-2-2)	2	
-17	454 710	D	CIRCUIT BREAKER - (PS50120-1-11) 25 amp, Mech Products Inc	1	
	454 709	G	CIRCUIT BREAKER - (PS50120-1-9) 20 amp, Mech Products Inc	1	
	454 743	E	CIRCUIT BREAKER - (P550120-3-38) 20 amp, Wood Electric Corp	1	32-7940264 and up
-18	88862-00	G	MOUNT ASSEMBLY - Relay	1	
-19	671 162		KNOB - Control head (RB-87-1-SB-M)	AR	
-20	99528-00	D	SWITCH ASSEMBLY - Condenser door mechanism	1	
-21	99604-00	E	BRACKET - Throttle limit switch	1	
-22	99789-00	E	ACTUATOR - Throttle limit switch	1	
-23	484 209	H	RELAY - (P560053-2-2)	1	
-24	567 903	H	SWITCH - (MS35058-22)	1	
-25	783 815	J	SWITCH REPLACEMENT KIT - Fan (4 position)	1	
	588 110	K	SWITCH - (MS35059-21) (3 position)	1	
-26	99717-00	H	THERMOSTAT - Air conditioning	1	
-27	99989-00	H	HOLDER ASSEMBLY - Fuse	1	
-28	461 629	H	* FUSE - (311005)	2	
-29	472 844	H	LIGHT - (MS25041-4)	1	
-30	472 054	H	BULB - (PS10008-330)	1	
-31	465 256	H	HOLDER - Fuse (156020)	3	
-32	461 629	H	FUSE - (311005)	3	
-33	484 467	H	RESISTOR - (4392)	1	

When ordering, always specify Part Number, Description and Serial Number of Aircraft

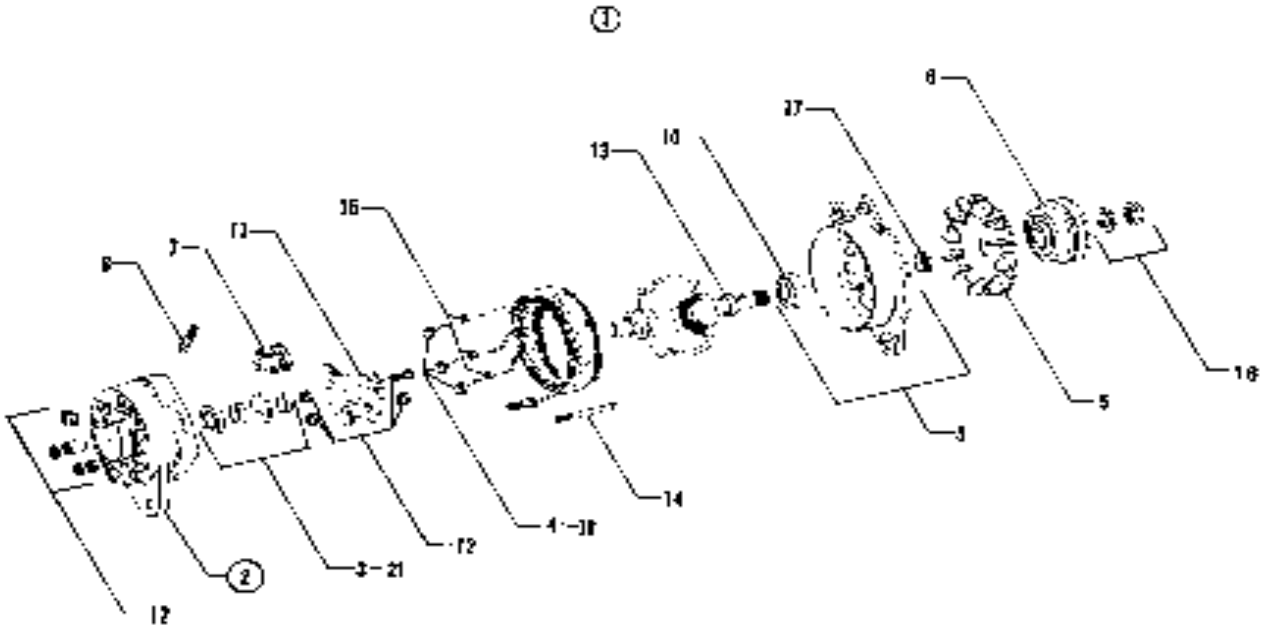

Figure 108. Alternator Assembly (Prestolite)
(PA-32-300 - Serial Nos. 32-40853, 32-7240056 and up)
(PA-32R-300 - Serial Nos. 32R-7680001 and up)

CODE EXPLANATIONS FOR FIGURE 108

A - Used on PA-32-300 with serial numbers 32-40853, 32-7240056 and up, and PA-32R-300.
B - Used with alternator assembly (ALY-6409) only.
C - Used with alternator assembly (ALY-6422) only.
D - Reference latest revision to Piper Service Letter 1040, applicable to PA-32-300 with serial numbers 7240056 and up and PA-32R-300 with serial numbers 32R-7680001 and up. Alternator Drive Belt Conversion Installation Kit, part No. 767-310, replaces the original factory installed alternator drive belt, which was of a narrow configuration.
E - Reference latest revision to Piper Service Letter 636.

PIPER PARTS CATALOG

Figure and Index Number	Part Number	Code	NOMENCLATURE	No. Req.	SERIAL NUMBERS AFFECTED
108-1	551 983	D	ALTERNATOR ASSEMBLY - (ALY-6422) (99891-0)	1	
-2	762 244	B	* SLIP RING END HEAD AND ROTOR ASSEMBLY PACKAGE (90-2402)	1	
-3	757 386	B	* * PACKAGE - Bearing and seal S.R.E. (90 2014)	1	
-4	757 387	B	* * PACKAGE - Rectifier, negative (XA-944JS)	1	
-5	754 827	E	* FAN ASSEMBLY - Ventilating - (90-2241)	1	
-6	757 392		* PULLEY - Drive (PU692B)	1	
-7	758 224		* BRUSH HOLDER AND SPRING ASSEMBLY (ALE 1045BS)	1	
-8	758 471		* * BRUSH SET - Alternator (ALE 1013AS)	1	
-9	755 232		* HEAD ASSEMBLY - Drive end (ALE 1003K)	1	
-10	758 225		* * BEARING - Ball seal (X-3416)	1	
-11	756 060		* RECTIFIER AND PLATE ASSEMBLY - Positive (ALE 1054A)	1	
-12	761 903		* TERMINAL STUD AND PARTS PACKAGE (90-2043)	1	
-13	756 061		* RETAINER - Drive end (GR 32)	1	
-14	757 388		* PACKAGE - Thru bolt (ALA-20JS)	1	
-15	757 389		* PACKAGE - Eyelet (90-818)	1	
-16	757 390		* PACKAGE - Nut and washer (90-33)	1	
-17	757 721		* SPACER - Rotor shaft (ALD-21A)	1	
-18			DELETED		
-19	757 387	C	* * PACKAGE - Rectifier negative (XA-944JS)	1	
-20			DELETED		
-21	757 386	C	* PACKAGE - Bearing and seal S.R.E. (90-2014)	1	
-22			DELETED		

When ordering, always specify Part Number, Description, and Serial Number of Aircraft

2K16 THRU 3A3
INTENTIONALLY LEFT BLANK

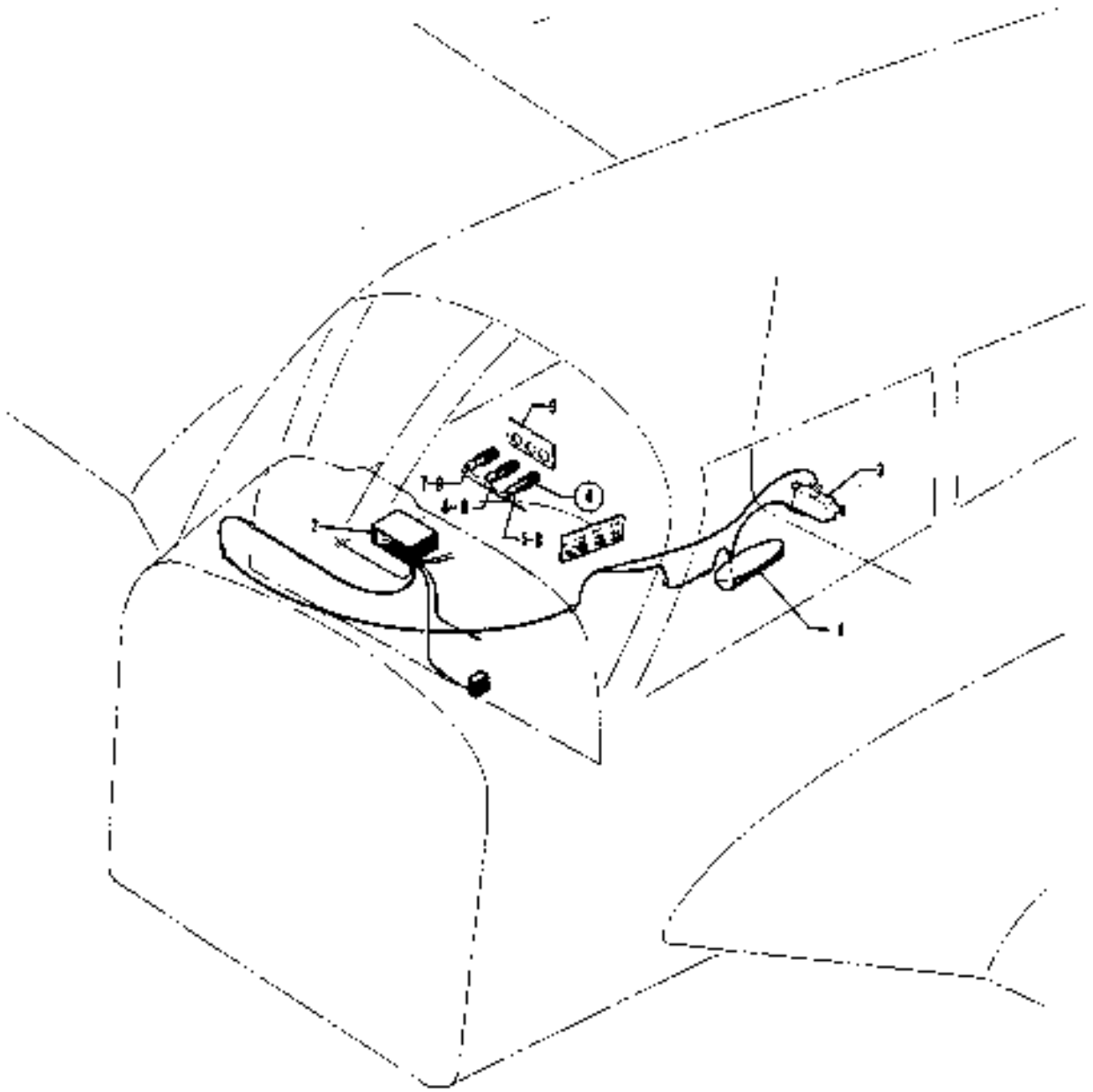

Figure 10B. Piper PM-1 Marker Beacon Installation

CODE EXPLANATIONS FOR FIGURE 109

A - Used on PA-32-260 with serial numbers 32-1 to 32-1110 incl., and PA-32-300 with serial numbers 32-40000 to 32-40565 incl.
B - Used on PA-32-260 with serial numbers 32-1111 to 32-7400061 incl., and PA-32-300 with serial numbers 32-40566 to 32-7440182 incl.
C - Used if trim panel indicator lights are installed.
D - Used if VOA-40M or VOA-60M Omni Converter, which incorporates indicator lights, is installed.
E - Used on PA-32-260 with ser. nos. 32-7100001 to 32-7400061 incl., and PA-32-300 with ser. nos. 32-7140001 to 32-7440182 incl.
F - Used on PA-32-260 with serial numbers 32-1 to 32-1320 incl., and PA-32-300 with serial numbers 32-40000 to 32-41018 incl.
G - Used on PA-32-260 with serial numbers 32-1261 to 32-1320 incl., and PA-32-300 with serial numbers 32-40861 to 32-41018 incl.
H - Used on PA-32-260 with ser. nos. 32-7100001 to 32-7200065 incl., and PA-32-300 with ser. nos. 32-7140001 to 32-7240147 incl.
J - Used on PA-32-260 with ser. nos. 32-7300001 to 32-7400061 incl., and PA-32-300 with ser. nos. 32-7340001 to 32-7440182 incl.
W - These parts must be ordered from Service Spares Department, Piper Aircraft, Lock Haven, Penna.

PIPER PARTS CATALOG

Figure and Index Number	Part Number	Code	NOMENCLATURE	No. Req.	SERIAL NUMBERS AFFECTED
100-	68861	A	DRAWING - Piper PM-1 Marker Beacon Installation		
	68894	B	DRAWING - Piper PM-1 Marker Beacon Installation		
-1	851 216	W	RECEIVER - Marker beacon (1-95005)	1	
-2	851 232	C,F	CONTROL HEAD - Marker beacon (1-950013)	1	
-3	596 138	D,G	CONTROL PANEL - Marker beacon (1-950018)	1	
	596 181	E	CONTROL PANEL - Marker beacon (1-950018)	1	
-4	99398-00	E	LIGHT ASSEMBLY - Marker beacon panel (complete)	1	
-5	472 823	E	LIGHT ASSEMBLY - Blue (134-3830-0334-201)	1	
-6	472 822	E	LIGHT ASSEMBLY - Amber (134-3830-0333-201)	1	
-7	472 824	E	LIGHT ASSEMBLY - Clear (134-3830-0337-201)	1	
-8	453 895	E	BULB - 328	3	
-9	99401-00	H	PANEL ASSEMBLY - Marker beacon lights	1	
	68849-00	J	PANEL ASSEMBLY - Marker beacon lights	1	

When ordering, always specify Part Number, Description and Serial Number of Aircraft

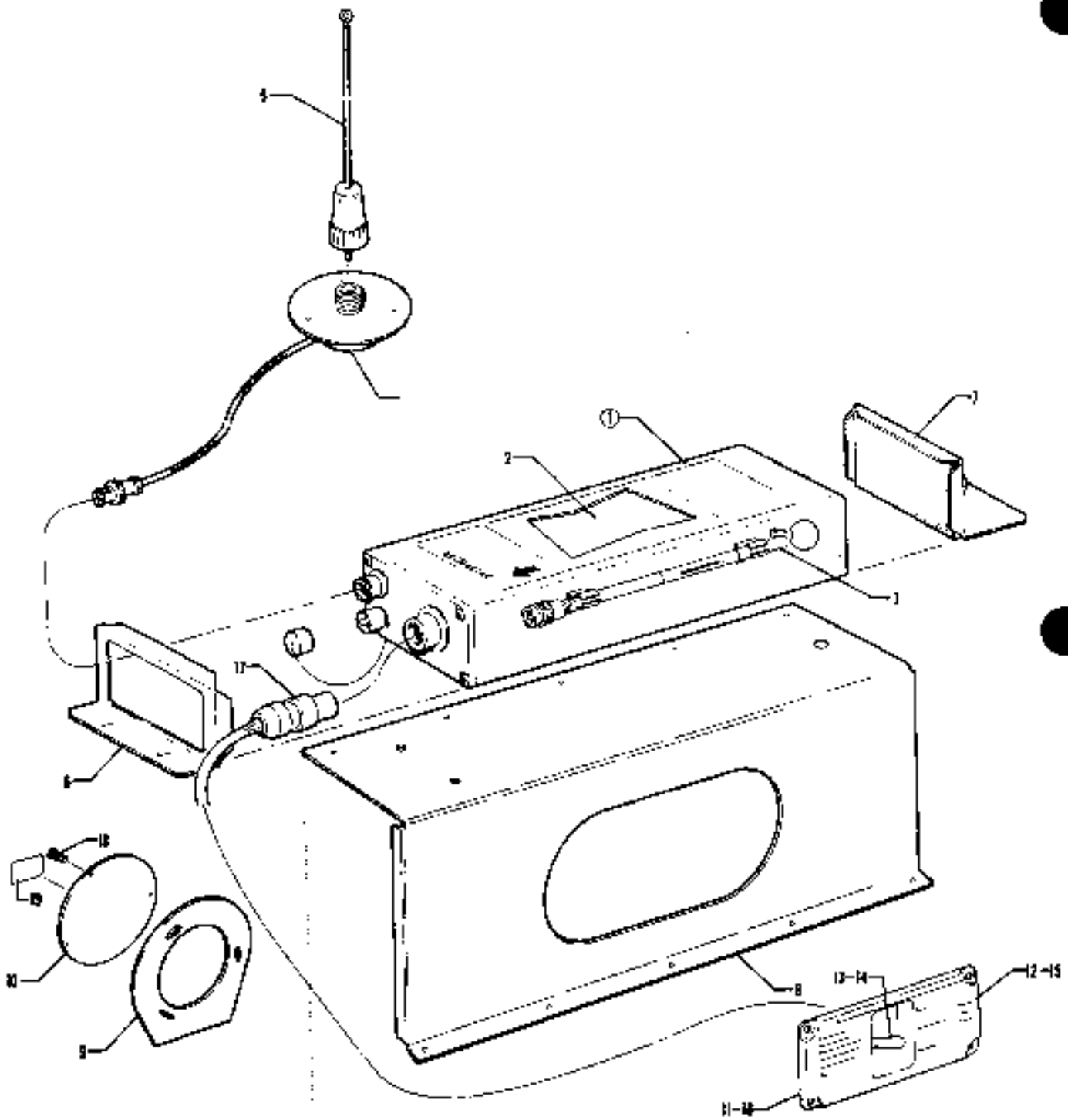

Figure 110 Piper Automatic Locator (ELT) Installation (Garrett Mfg. Ltd.)

CODE EXPLANATIONS FOR FIGURE 110

A - Used with Transmitter Assembly Part No. 761 967 (Model 627810-1)
B - Used with Transmitter Assembly Part No. 756 398 (Model 627484-1)
C - Used with Transmitter Assembly Part No. 761 939 (Model 627674-1)
D - When ordering, specify color red, blue/green, tan, black or avocado.
E - Reference latest revision to Piper Service Letter 820. Airworthiness Directive 79-18-05, issued in 1980, requires removal of any Emergency Locator Transmitter (ELT) equipped with Lithium Sulfur Dioxide (LiSO2) Batteries, and replacement with an alternate. Piper P/N 758 364 is no longer available from manufacturer. Use ELT replacement Kit 763-842 per Piper Service Letter 820, Part III.
F - Reference latest revision to Piper Service Letter 762, applicable to PA-32-260 with serial numbers 32-7400027 to 32-7600001 incl. and PA-32-300 with serial numbers 32-7440058 to 32-7640016 incl., and PA-32R-300 with serial numbers 32R-7680001 to 32R-7680013. Install ELT Remote Switch Kit 761-009 to seal the ELT remote switch in order to prevent electrical shorting and possible inadvertent activation of the ELT due to moisture intrusion.
H - Reference latest revision to Piper Service Letter 715. Install ELT Switch Cover Installation Modification Kit 760-876, which allows the switch to be recessed into the cockpit left hand side panel thus eliminating the possibility of inadvertently activating the ELT unit.

PIPER PARTS CATALOG

Figure and Index Number	Part Number	Code	NOMENCLATURE	No. Req.	SERIAL NUMBERS AFFECTED
110-	99890		DRAWING - Piper Automatic Locator (ELT) Installation		
-1	756 398		TRANSMITTER ASSEMBLY - Automatic locator (627484-1) (includes magnesium battery pack)	1	
	761 939		TRANSMITTER ASSEMBLY - Automatic locator (627674-1) (includes magnesium battery pack)	1	
	761 967	E	TRANSMITTER ASSEMBLY - Automatic locator (627810-1) (includes magnesium battery pack)	1	
-2	758 281	B,C	* BATTERY PACK - Transmitter assembly (Magnesium)	1	
	758 364	A,E	* BATTERY PACK - Transmitter assembly (Lithium)	1	
-3	751 316		* ANTENNA ASSEMBLY - Telescopic	1	
-4	751 318		CABLE AND BASE ASSEMBLY - Whip antenna	1	
-5	751 319		ANTENNA ASSEMBLY - Whip (Less cable and base)	1	
-6	758 266		BRACKET - Forward transmitter mounting	1	
-7	758 267		BRACKET ASSEMBLY - Aft transmitter mounting (includes lock knob)	1	
-8	99887-02		BRACKET ASSEMBLY - Emergency locator transmitter	1	
-9	99888-00		RING ASSEMBLY - Emergency locator transmitter	1	
-10	99889-00		COVER ASSEMBLY - Emergency locator transmitter	1	
-11	79033-00	C,D,F	SWITCH AND COVER ASSEMBLY - ELT	1	
-12	69669-15	C	* PLACARD - Warning (exposed switch)	1	
	69669-66	C	* PLACARD - Warning (recessed switch)	1	
-13	587 952	C,F	* SWITCH - (SF1LBX183-7)	1	
-14	588 011	A,F	SWITCH - (8E1011)	1	
-15	69669-107	A,F	PLACARD - Warning	1	
-16	79463-00	A,D,G	COVER - ELT switch	1	
-17	555 731	C	CONNECTOR - (612129-3)	1	
-18	486 281		SCREW - (PS10015-BB-12NA)	3	
-19	35669-105		PLACARD - ELT location	1	

When ordering, always specify Part Number, Description, and Serial Number of Aircraft

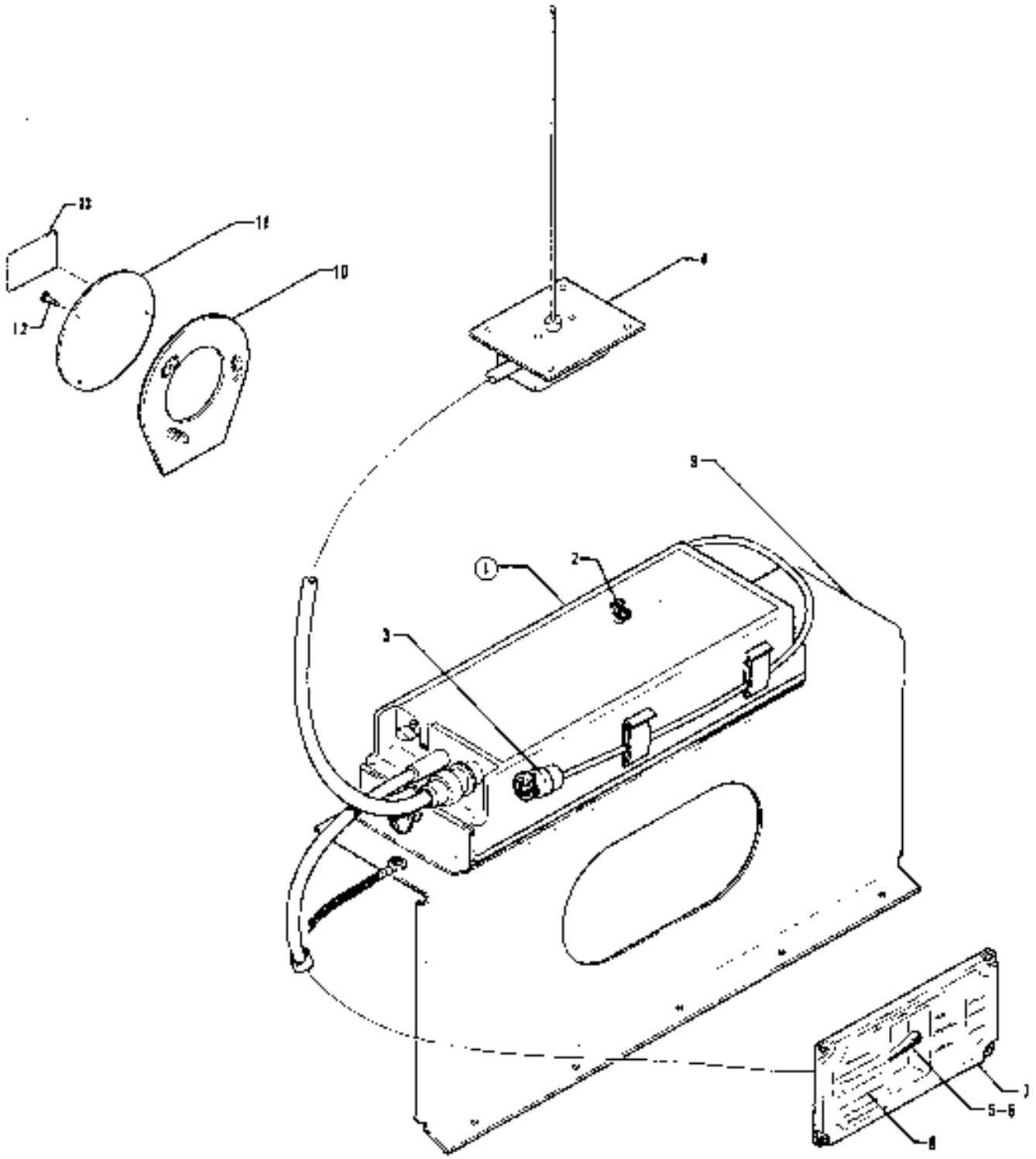

Figure 110A. Piper Automatic Locator (ELT) Installation (Communications Components Corp.)

CODE EXPLANATIONS FOR FIGURE 110A

A - When ordering, specify color red, blue/green, gold, black, green or bark. Specify color “bark I” for PA-32-260 with serial numbers 32-7700001 to 32-7700013 inclusive, PA-32-300 with serial numbers 32-7740001 to 32-7740044 inclusive, and PA-32R-300 with serial numbers 32R-7780001 to 32R-7780214 inclusive. Specify color “bark II” for PA-32-260 with serial numbers 32-7700014 and up, PA-32-300 with serial numbers 32-7740045 and up, and PA-32R-300 with serial numbers 32R-7780215 and up.

B - Reference latest revision to Piper Service Letter 762, applicable to PA-32-260 with serial numbers 32-7400027 to 32-7600001 incl. and PA-32-300 with serial numbers 32-7440058 to 32-7640016 incl., and PA-32R-300 with serial numbers 32R-7680001 to 32R-7680013. Install ELT Remote Switch Kit 761-009 to seal the ELT remote switch in order to prevent electrical shorting and possible inadvertent activation of the ELT due to moisture intrusion.

C - Reference latest revision to Piper Service Letter 715. Install ELT Switch Cover Installation Modification Kit 760 876, which allows the switch to be recessed into the cockpit left hand side panel thus eliminating the possibility of inadvertently activating the ELT unit.

D - Reference latest revision to Piper Service Letter 820, Part I and Part II.

PIPER PARTS CATALOG

Figure and Index Number	Part Number	Code	NOMENCLATURE	No. Req.	SERIAL NUMBERS AFFECTED
110A-	79761		DRAWING - Piper Automatic Locator (ELT) Installation		
-1	762 030	D	TRANSMITTER ASSEMBLY - Automatic locator (CIR-11-2) (includes alkaline battery pack)	1	
-2	758 528	D	* BATTERY PACK - Transmitter assembly (alkaline)	1	
-3	758 092		* ANTENNA ASSEMBLY - Portable (10-249)	1	
-4	763 004		ANTENNA ASSEMBLY - Whip (10-234)	1	
-5	79762-02	B	SWITCH AND HARNESS ASSEMBLY - ELT	1	
-6	588 030	B	* SWITCH - (8A2051)	1	
-7	79463-02	A,C	COVER - ELT switch	1	
-8	69669-66		PLACARD - Warning	1	
-9	99887-04		BRACKET ASSEMBLY - Emergency locator transmitter	1	
-10	99888-00		RING ASSEMBLY - Emergency locator transmitter	1	
-11	99889-00		COVER ASSEMBLY - Emergency locator transmitter	1	
-12	486 281		SCREW - (PS10015-B8-12NA)	3	
-13	35669-105		PLACARD - E.L.T. location	1	

When ordering, always specify Part Number, Description, and Serial Number of Aircraft

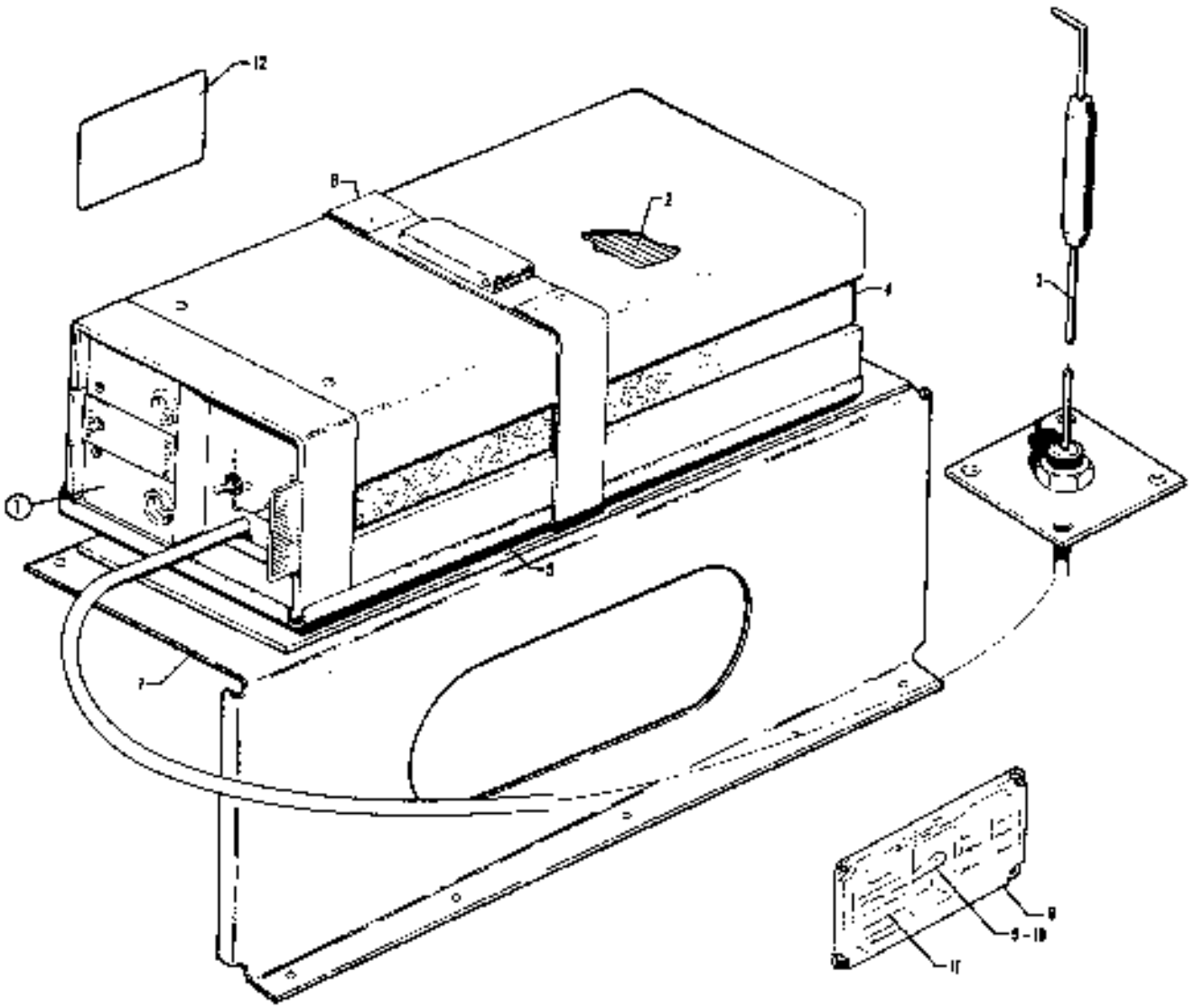

Figure 1108 Piper Automatic Locator (ELT) Installation
(Narco Avionics)

CODE EXPLANATIONS FOR FIGURE 110B

A - Reference latest revision to Piper Service Letter 762, applicable to PA-32-260 with serial numbers 32-7400027 to 32-7600001 incl. and PA-32-300 with serial numbers 32-7440058 to 32-7640016 incl. and PA-32R-300 with serial numbers 32R-7680001 to 32R-7680013. Install ELT Remote Switch Kit 761-009 to seal the ELT remote switch in order to prevent electrical shorting and possible inadvertent activation of the ELT due to moisture intrusion.

B - Reference latest revision to Piper Service Letter 715. Install ELT Switch Cover Installation Modification Kit 760 876, which allows the switch to be recessed into the cockpit left hand side panel thus eliminating the possibility of inadvertently activating the ELT unit.

PIPER PARTS CATALOG

Figure and Index Number	Part Number	Code	NOMENCLATURE	No. Req.	SERIAL NUMBERS AFFECTED
110B-	36632		DRAWING - Piper Automatic Locator (ELT) Installation		
-1	597 461		TRANSMITTER ASSEMBLY - Automatic locator (ELT-10) (includes alkaline battery pack)	1	
-2	758 452		* BATTERY PACK - Transmitter assembly (57674-0001)	1	
-3	597 257		* ANTENNA ASSEMBLY - ELT (01652-0101)	1	
-4	763 019		* ANTENNA - Blade, portable (57667-0001)	1	
-5	758 453		* BASE - Transmitter assembly (57666-0001)	1	
-6	762 357		* STRAP - Transmitter assembly (57682-0101)	1	
-7	99887-06		BRACKET ASSEMBLY - Emergency locator transmitter	1	
-8	79463-00	B	COVER - ELT switch (black)	1	
-9	79599-00	A	SWITCH AND HARNESS ASSEMBLY - ELT	1	
-10	588 011	A	* SWITCH - (8E1011)	1	
-11	35669-132		PLACARD - Warning	1	
-12	35669-105		PLACARD - ELT location	1	

When ordering, always specify Part Number, Description, and Serial Number of Aircraft

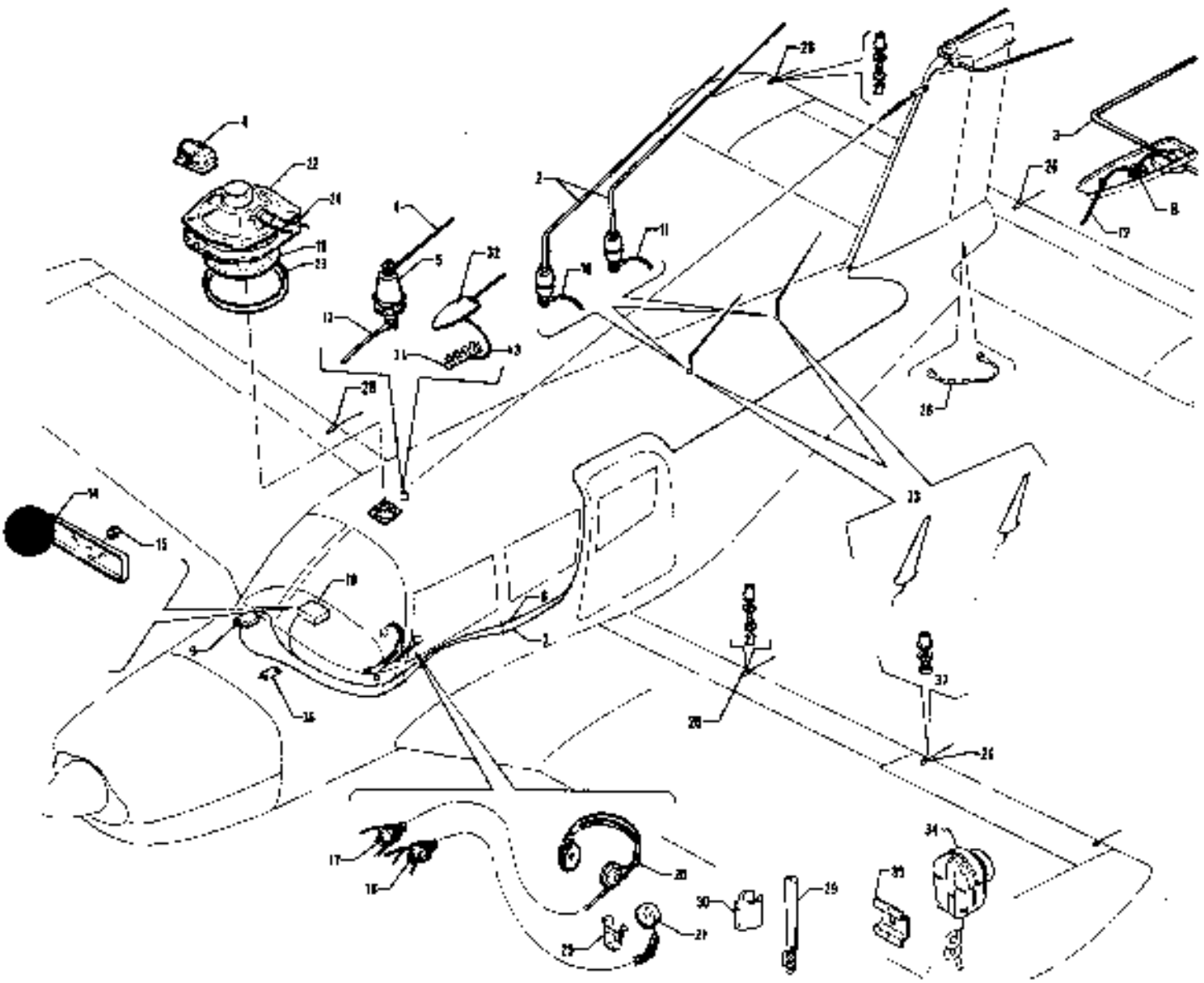

Figure 911 Radio, Antenna System and Static Wicks Installation

CODE EXPLANATIONS FOR FIGURE 111

A - Used on PA-32-260 with serial numbers 32-1 to 32-1110 incl , and PA-32-300 with serial numbers 32-40000 to 32-40565 incl
B - Used on PA-32-260 with serial numbers 32-1111 and up, and PA-32-300 with serial numbers 32-40566 and up
C - Used on PA-32-260 with serial numbers 32-1 to 32-1320 incl , and PA-32-300 with serial numbers 32-40000 to 32-41018 incl
D - Used on PA-32-260 with serial numbers 32-7100001 and up, and PA-32-300 with serial numbers 32-7140001 and up
E - Used on PA-32-260 with serial numbers 32-7100001 to 32-7200022 incl , and PA-32-300 with serial numbers 32-7140001 to 32-7240081 incl
F - Used on PA-32-260 with serial numbers 32-7200023 and up, and PA-32-300 with serial numbers 32-7240082 and up
G - Used on PA-32-260 with serial numbers 32-7300048 and up, PA-32-300 with serial numbers 32-7340148 and up, and PA-32R-300
H - Used on PA-32-260 with serial numbers 32-7100001 and up, PA-32-300 with serial numbers 32-7140001 and up, and PA-32R-300
J - Used on PA-32-260 and PA-32-300 only
K - Used on PA-32-260 with serial numbers 32-1111 to 32-7100038 incl , and PA-32-300 with serial numbers 32-40566 to 32-7140086 incl
L - Used if Single Radio is installed
M - Used if Dual Radios are installed
N - See Figure 53 for component parts
O - With Single VHF Switch, ADF Switch and Marker Beacon Switch
P - With Microphone Switch, Dual VHF Switches and ADF Switch
Q - With Microphone Switch, Dual VHF Switches, ADF Switch and Marker Beacon Switches
R - Used on PA-32-260 with serial numbers 32-7200001 and up, PA-32-300 with serial numbers 32-7240001 and up, and PA-32R-300
S - Used if Bendix ADF-T-12C or ADF-T-12D Receiver is installed
T - Used on PA-32-300 with serial numbers 32-7840001 and up, and PA-32R-300 with serial numbers 32R-7680001 and up
U - When ordering, specify color "bark it" or black
V - Used on PA-32-260 with serial numbers 32-7800001 and up, PA-32-300 with serial numbers 32-7840001 and up, and PA-32R-300 with serial numbers 32R-7680001 and up
W - These parts must be ordered from Service Spares Department, Piper Aircraft, Lock Haven, Penna
X - Used on PA-32-300 only

PIPER PARTS CATALOG

Figure and Index Number	Part Number	Code	NOMENCLATURE	No. Req.	SERIAL NUMBERS AFFECTED
111-	68855	A	DRAWING - Radio Systems Installation		
	69390	B	DRAWING - Radio Systems Installation		
	68854	A	DRAWING - Radio Antenna Systems Installation		
	69389	B	DRAWING - Radio Antenna Systems Installation		
	79158	G	DRAWING - All Weather Radio Antenna System Installation		
	69667		DRAWING - Static Wicks Installation		
-1	62238-05	C	ANTENNA ASSEMBLY - Receiving	1	
	62238-10	E	ANTENNA ASSEMBLY - Receiving	1	
	99841-03	F	ANTENNA ASSEMBLY - Receiving	1	
-2	451 272	J,W	ANTENNA SUPPLY - Transmitting (VTP-17)	2	
-3	451 273	J,W	ANTENNA ASSEMBLY - Omni-receiving (VRP-37)	1	
-4	484 375	D	RELAY - Microphone (11F-2300G-6L)	1	
-5	467 064	J,W	INSULATOR - Antenna (136-40)	1	
-6	463 390		GROMMET - (1559)	9	
-7	434 135	W	GROMMET - (AN391-8-13)	5	
-8	434 144	W	GROMMET - (AN931-16-22)	1	
-9	596 059	C	COUPLER - (Two set VRP-40)	1	
	555 501	H	COUPLER - Dual Nav-com (AVB-10)	1	
	555 422	V	COUPLER - Dual Nav-com with glide slope (AV-571)	1	
	565 421	X	COUPLER - Single Nav-com with glide slope (AV-570)	1	32-7940091 and up
-10	65333-04	C	CABLE ASSEMBLY - Transmitting	1	
	99610-02	H	CABLE ASSEMBLY - Transmitting	1	
-11	65333-06	C	CABLE ASSEMBLY - Transmitting	1	
	99610-03	H	CABLE ASSEMBLY - Transmitting	1	
-12	65192-05	C	CABLE ASSEMBLY - Receiving	1	
	65192-10	D	CABLE ASSEMBLY - Receiving	1	
-13	62239-00	A	CABLE ASSEMBLY - Receiving	1	
	596 118	B	CABLE ASSEMBLY - Receiving (90677-67)	1	
-14	68813-02	A	COVER ASSEMBLY - Radio junction box	1	
	68813-00	A	COVER ASSEMBLY - Transmitter selector	1	
	69409-00	D	COVER ASSEMBLY - Transmitter selector	1	
-15	471 068	A,W	KNOB - Selector switch (M-88010-4)	1	
-16	468 002	W	JACK - Mike (3128)	2	
-17	468 006	W	JACK - Phone (11)	1	
-18	68941-00	E,F,L	BOX ASSEMBLY - Radio junction	1	
	88876-00	A,M,N	SELECTOR ASSEMBLY - Transmitter	1	
	99395-00	D,N,Q	AUDIO SELECTOR ASSEMBLY	1	
	99395-02	H,N,P	AUDIO SELECTOR ASSEMBLY	1	
	99395-03	H,N,Q	AUDIO SELECTOR ASSEMBLY	1	
-19	68441-00	C	GRILL - Radio speaker	1	
	99196-00	H	GRILL - Radio speaker	1	
-20	464 327	W	HEADPHONE	1	
	464 407	T	HEADPHONE - (With boom mike)	1	
-21	474 852		MICROPHONE - (Telex 50837-17)	1	
-22	585 015		SPEAKER - Radio, circular (6FU3211)	1	
-23	68440-00	C	RING - Radio speaker	1	
-24	99745-00	H	GASKET - Radio speaker	1	
-25	454 869	A,W	CLIP - Microphone (used with Telephonics mike RS-38A)	1	
	453 415	A,W	BRACKET - Microphone (used with Telex mike 66C)	1	
	453 417	K,W	BRACKET - Microphone	1	
	99660-06	R,U	SUPPORT - Microphone	1	
-26	494 678		WICK - Static (SW10-BB-3)	9	
-27	415 620	W	SCREW - (MS35206-230)	10	
	407 122		WASHER - (AN935-8L)	10	
	406 848	W	RIVNUT - (ABK75)	10	
-28	469 600		JUMPER ASSEMBLY - Lightning protection (MS25083-3AA6)	7	
-29	474 842		MICROPHONE - (Telex 62800-04)	1	

When ordering, always specify Part Number, Description and Serial Number of Aircraft

PIPER PARTS CATALOG

Figure and Index Number	Part Number	Code	NOMENCLATURE	No. Req.	SERIAL NUMBERS AFFECTED
111-30	565 523		HOLDER - Microphone (Telex 62802-00)	1	
-31	79152-00	G	STRIP ASSEMBLY - Terminal	1	
	79152-02	G,S	STRIP ASSEMBLY - Terminal	1	
-32	79160-00	G	ANTENNA - All weather receiving	1	
-33	596 332	G	ANTENNA - Broadband, VHF Comm (PS50040-18-1) (Communications Components)	2	
	596 664	G	ANTENNA - Broadband, VHF Comm (PS50040-18-2) (Dorne & Margolin)	2	
-34	474 655		MICROPHONE - Narco (M700A)	1	
-35	554 686		CLIP - Microphone holder (902-1136)	1	
-36	584 006	T	RELAY - Boom mike (652C-121-1D)	1	
-37	415 621	W	SCREW - (MS35206-231)	8	
	407 122		WASHER - (AN935-6L)	8	
	406 848	W	RIVNUT - (A6K75)	8	

When ordering, always specify Part Number, Description and Serial Number of Aircraft

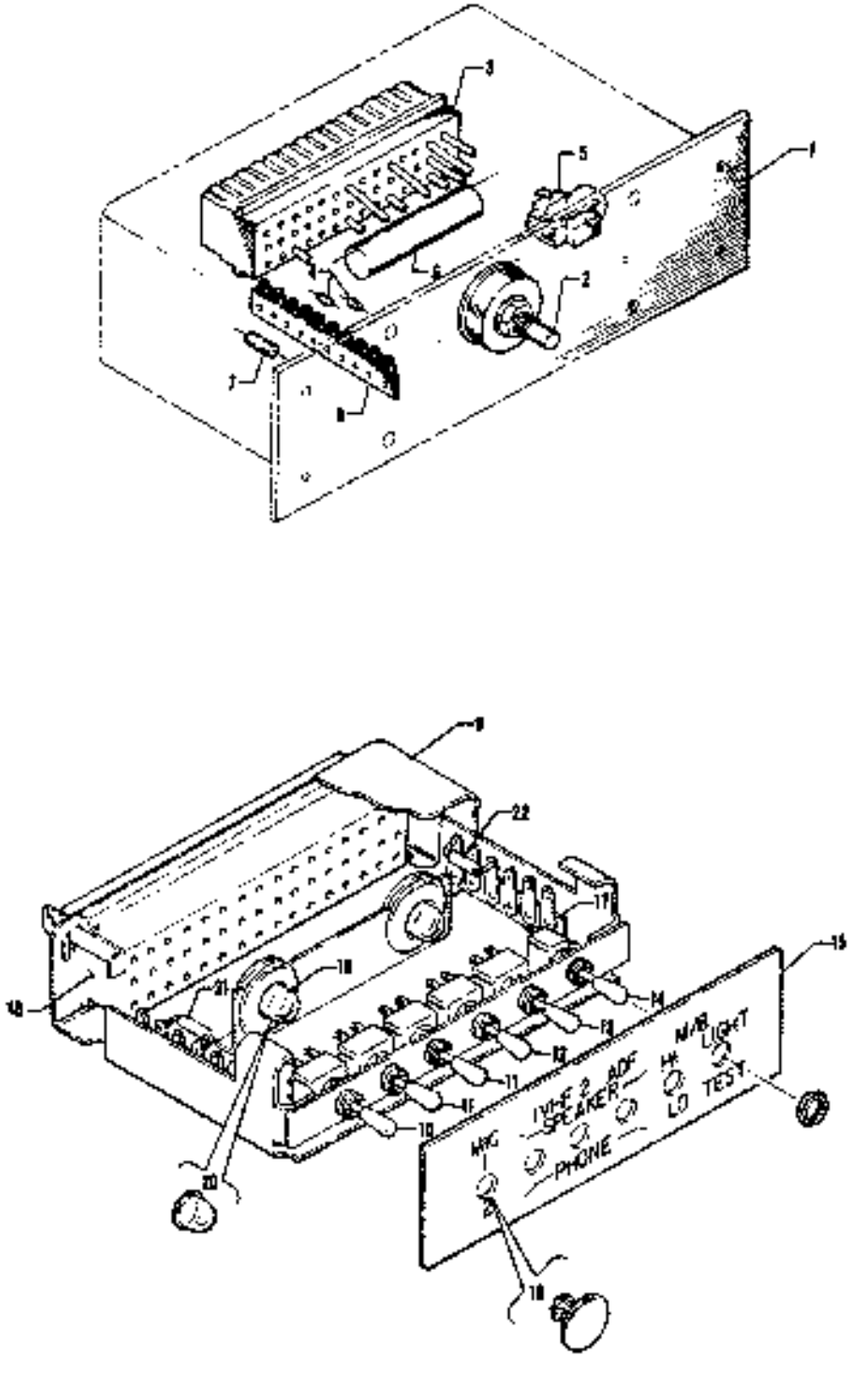

Figure 112. Radio Junction Boxes

CODE EXPLANATIONS FOR FIGURE 112

A - Used if Single Radio is installed.
B - Used if Dual Radios are installed.
C - Used on PA-32-260 with serial numbers 32-1 to 32-1110 incl., and PA-32-300 with serial numbers 32-40000 to 32-40665 incl.
D - Used on PA-32-260 with serial numbers 32-1 to 32-1320 incl., and PA-32-300 with serial numbers 32-40000 to 32-41018 incl.
E - With Single VHF Switch, ADF Switch and Marker Beacon Switches.
F - With Microphone Switch, Dual VHF Switches and ADF Switch.
G - With Microphone Switch, Dual VHF Switches, ADF Switch and Marker Beacon Switches.
H - Used on PA-32-260 with serial numbers 32-7100001 and up, and PA-32-300 with serial numbers 32-7140001 and up.
J - Used on PA-32-260 with serial numbers 32-7100001 and up, PA-32-300 with serial numbers 32-7140001 and up, and PA-32R-300.
W - These parts must be ordered from Service Spares Department, Piper Aircraft, Lock Haven, Penna.

PIPER PARTS CATALOG

Figure and Index Number	Part Number	Code	NOMENCLATURE	No. Req.	SERIAL NUMBERS AFFECTED
112-1	88941-00	A,D	BOX ASSEMBLY - Radio junction (complete)	1	
	88876-00	B,C	SELECTOR ASSEMBLY - Transmitter selector	1	
-2	88928-00	B,C	SWITCH - Transmitter selector	1	
-3	484 303	D	RECEPTACLE - (R-42)	1	
-4	466 703	A,D	DIODE - (1N2071)	1	
	466 703	B,C	DIODE - (1N2071)	2	
-5	484 375	D	RELAY - (11F-2300G-SIL)	1	
-6	484 416	D	RESISTOR - (FZ4-7)	1	
-7	484 436	D	RESISTOR - (470 OHM, 1/4 watt)	1	
-8	488 486	D	STRIP - Terminal (1070)	1	
-9	99395-00	E,H	AUDIO SELECTOR ASSEMBLY	1	
	99395-02	F,J	AUDIO SELECTOR ASSEMBLY	1	
	99395-03	G,J	AUDIO SELECTOR ASSEMBLY	1	
-10	587 807	J	SWITCH - Microphone (JMT-223)	1	
-11	587 808	J	SWITCH - VHF (JMT-221)	2	
-12	587 808	J	SWITCH - ADF (JMT-221)	1	
-13	587 808	J	SWITCH - Marker beacon, HI/Lo (JMT-221)	1	
-14	587 809	J	SWITCH - Marker beacon, light test (JMT-126)	1	
-15	99344-00	J	PLATE - Selector face	1	
-16	453 885	J,W	BUTTON - Plug (207-170201-00)	2	
-17	569 356	J	STRIP - Terminal (1076)	2	
-18	484 234	J	RECEPTACLE - (1055R48)	1	
-19	472 058	J	BULB - (GE53)	2	
-20	460 602	J	FILTER - Lumar white (1813-26)	2	
-21	466 703	J	DIODE - (1N2071)	3	
-22	484 461	J	RESISTOR - (242E3R05)	1	

3A23 THRU 3A24

INTENTIONALLY LEFT BLANK

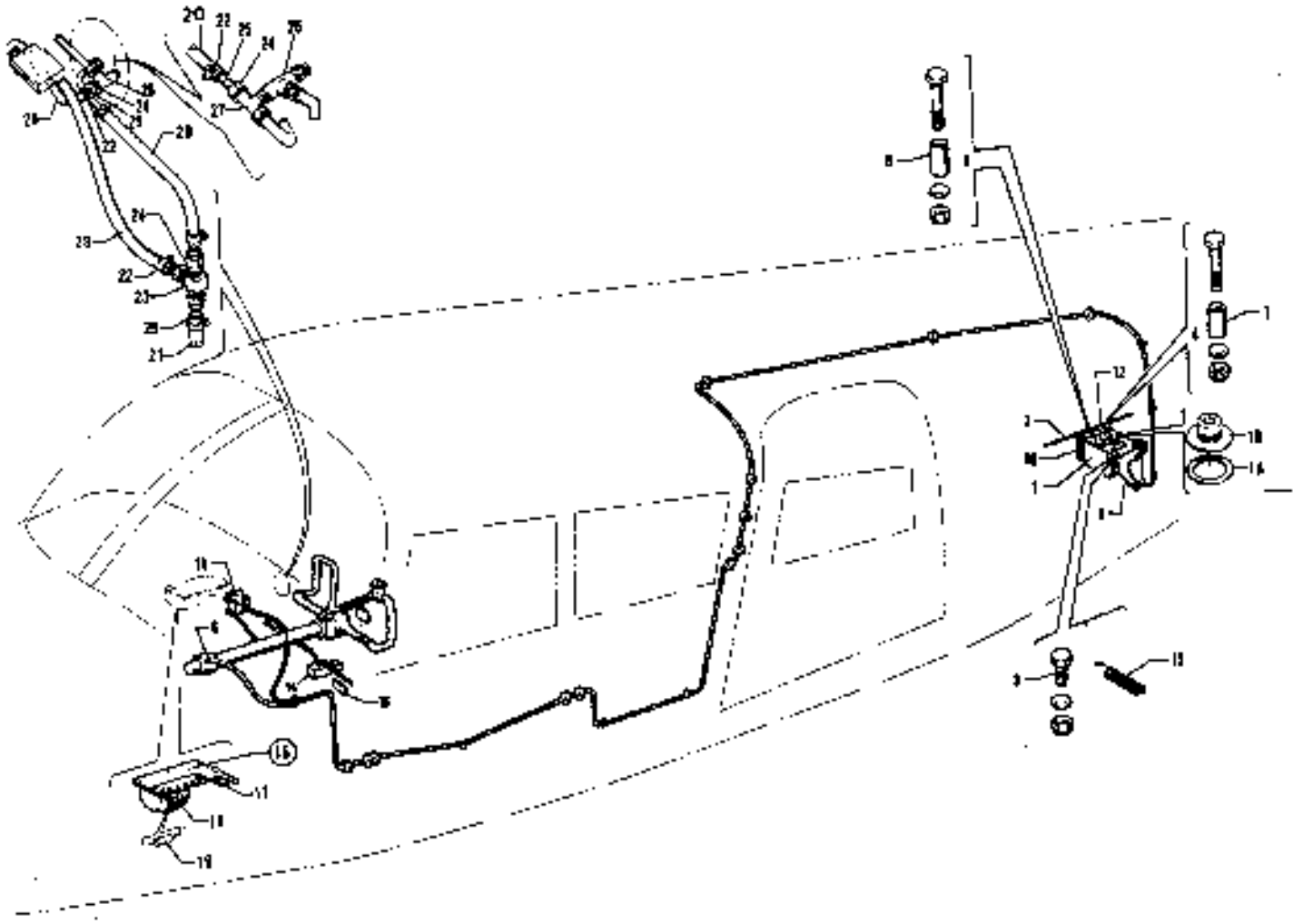

Figure 113 Electric Trim Installation

CODE EXPLANATIONS FOR FIGURE 113

A - Used on PA-32-260 with serial numbers 32-1 to 32-1110 incl , and PA-32-300 with serial numbers 32-40000 to 32-40565 incl
B - Used on PA-32-260 with serial numbers 32-1111 and up, PA-32-300 with serial numbers 32-40566 and up, and PA-32R-300
C - Used on PA-32S-300 Seaplane Model only
D - Used on PA-32-260 with serial numbers 32-1 to 32-7500007 incl , and PA-32-300 with serial numbers 32-40000 to 32-7540057 incl
E - Used on PA-32-260 with serial numbers 32-7500008 and up, PA-32-300 with serial numbers 32-7540058 and up, and PA-32R-300 Also used on PA-32-260 with serial numbers 32-1 to 32-7500007 incl , and PA-32-300 with serial numbers 32-40000 to 32-7540057 incl if Electric Trim Servo Replacement Kit 763 850v has been installed
F - Used on PA-32R-300 only
G - Used if Alternate Static System is not installed
H - Used if Alternate Static System is installed
J - Trim Servo assembly is no longer available Order Electric Trim Servo Replacement Kit 763 850v Also order electric trim switch part no 67443-04 if a bowtie style control wheel is installed or electric trim switch part no 761 039 if a ramshorn style control wheel is installed
W - These parts must be ordered from Service Spares Department, Piper Aircraft, Lock Haven, Penna

PIPER PARTS CATALOG

Figure and Index Number	Part Number	Code	NOMENCLATURE	No. Req.	SERIAL NUMBERS AFFECTED
113-	88673	A	DRAWING - Trim installation		
	88378	B	DRAWING - Trim installation		
	79636	F	DRAWING - Electric Trim Stop Sensor Installation		
-1	65821-02	D,J	SERVO ASSEMBLY - Trim	1	
	65821-03	E	SERVO ASSEMBLY - Trim	1	
-1a	494 169		* WASHER - Servo friction (24886-00)	1	
-1b	681 128		* PLATE - Servo clutch, outer (24695-00)	1	
-2	62701-42		CABLE ASSEMBLY - Stabilator trim	1	
	62701-60	C	CABLE ASSEMBLY - Stabilator trim	1	32S-40000 to 32S-7240147 incl
-3	401 266	W	BOLT - (AN3-5A)	2	
	407 564	W	WASHER - (AN960-10)	2	
	404 687	W	NUT - (MS20365-1032C)	2	
-4	400 443	W	BOLT - (AN3-12A)	1	
	407 564	W	WASHER - (AN960-10)	1	
	404 687	W	NUT - (MS20365-1032C)	1	
-5	401 270	W	BOLT - (AN3-11A)	1	
	407 564	W	WASHER - (AN960-10)	1	
	404 687	W	NUT - (MS20365-1032C)	1	
-6	434 126	W	GROMMET - (AN931-3-5)	1	
-7	63900-66		BUSHING - Electric trim	1	
-8	63900-67		BUSHING - Electric trim	1	
-9	88674-00		BRACKET ASSEMBLY - Electric trim	1	
-10	88675-00		BRACKET - Electric trim	1	
-11	454 668	W	CIRCUIT BREAKER - (PS601 20-3-7)	1	
-12	481 640		PULLEY - (MS24666-1B)	2	
-13	86784-00		SPRING - Electric trim	1	
-14	67445-00	B	SWITCH ASSEMBLY - Pitch trim	1	
-15	67490-02	B	PLACARD - Pitch trim	1	
-16	79657-03		SENSOR ASSEMBLY - Electric trim stop	1	
-17	488 416	F	* SENSOR - (MPL-501G-10 to 30)	1	
-18	484 228	F	* RELAY - (R56012)	1	
-19	484 524	F	* RESISTOR - (180 OHM, 1 Watt, Type GB)	1	
-20	63913-143	F	HOSE	1	32R-7680001 to 32R-7780049 incl
	63913-151	F	HOSE	1	32R-7780050 and up
-21	63913-144	F	HOSE	1	32R-7680001 to 32R-7780049 incl
	63913-152	F	HOSE	1	32R-7780050 and up
-22	564 881	F,W	CLAMP - (SAE TY F-4)	6	
-23	79636-10	F	TEE	1	
-24	477 611	F	NUT - (AN818-3D)	4	
	486 886	F	SLEEVE - (MS20818-3D)	4	
-25	79636-04	F	TUBE	4	
-26	488 310	F,G,W	TEE - (AN928-3D)	1	
	488 474	F,H,W	TEE - (AN817-1D)	1	
-27	488 380	F,H,W	TEE - (AN825-3D)	1	
-28	63913-143	F	HOSE	1	
-29	63913-143	F	HOSE	1	32R-7680001 to 32R-7780049 incl
	63913-150	F	HOSE	1	32R-7780050 and up

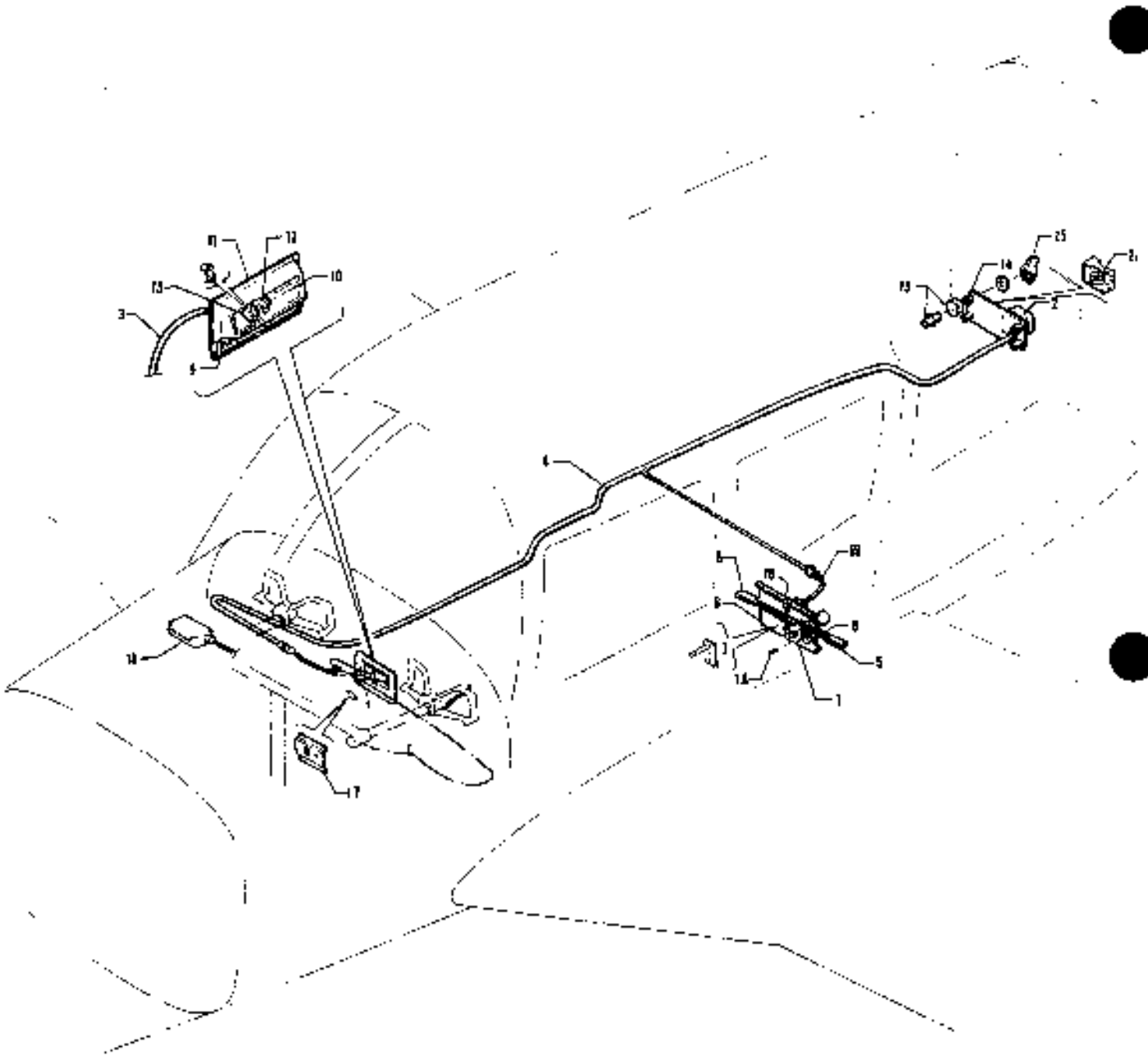

Figure 114. AutoFlite Installation
(PA-32-260 - Serial Nos. 32-1 to 32-1920 Inclusive)
(PA-32-300 - Serial Nos. 32-40000 to 32-41018 Inclusive)

CODE EXPLANATIONS FOR FIGURE 114

A - Used on PA-32-260 with serial numbers 32-1 to 32-1320 incl., and PA 32-300 with serial numbers 32-40000 to 32-41018 incl.
B - Used on PA-32-260 with serial numbers 32-1111 to 32-1320 incl., and PA32-300 with serial numbers 32-40566 to 32-41018 incl.
C - Used when tracker is not installed.
D - Used with Servo Model 1C363-1-183R only.
E - Ascertain Servo Model Number when ordering.
F - Used on PA32-260 with serial numbers 32-1 to 32-1110 incl., and PA-32-300 with serial numbers 32-40000 to 32-40565 incl.
G - Reference latest revision to Piper Service Letter 577.
H - Reference latest revision to Piper Service Bulletin 279.

PIPER PARTS CATALOG

Figure and Index Number	Part Number	Code	NOMENCLATURE	No. Req.	SERIAL NUMBERS AFFECTED
114-	68827	F	DRAWING - AutoFlite Installation		
	69388	B	DRAWING - AutoFlite Installation		
-1	753 721	E	SERVO - Roll (1D363-183R)	1	
	757 595	E	SERVO - Roll (1C363-1-183R)	1	
-1a	757 579		* SET SCREW - Capstan (3S326)	1	
-2	751 278		AMPLIFIER ASSEMBLY - Gyro (1C359-1)	1	
-2a	756 052		* RELAY - Gyro amplifier (80S11)	1	
-3	757 855		CABLE ASSEMBLY - (3OC280)	1	
-3a	757 592	C	* SPACER - AutoFlite trim shaft (43A370)	1	
-4	753 977		CABLE ASSEMBLY - (30B184-4)	1	
-5	757 863	G	CLAMP ASSEMBLY - Bridle cable (42A173-1)	2	
-6	453 426		BRACKET - Servo mounting (7C511-2)	1	
-7	751 897		GUARD - Cable (7A508-1)	1	
-8	753 980	H	CABLE - Bridle (30B200)	1	
-9	68821-00		PLACARD - AutoFlite console	1	32-451 to 32-558 inclusive
-10	68825-00	F	PLACARD - AutoFlite trim (without tracker)	1	
	67492-00	B	PLACARD - AutoFlite trim (without tracker)	1	
	66800-00		PLACARD - AutoFlite trim (with tracker)	1	
-11	68824-00	F	PANEL - AutoFlite trim	1	
-12	487 901		SWITCH - Engage (8134-K21A1v-50)	1	
-13	571 087		KNOB - Trim, black (RB31)	1	
-14	467 066		ISOLATOR - Vibration (JA-6984-8)	4	
-15	404 751		NUT - Wing (AN350-832)	4	
	407 134		WASHER - (AN936-A8)	8	
	407 583		WASHER - (AN960-8L)	4	
	406 863		RIVNUT -(A8K-75)	4	
-16	400 438		BOLT - (AN3-4A)	4	
	404 835		NUT - (MS20365-1032C)	4	
-17	66789-00	B	BRACKET - AutoFlite	1	
-18	596 032		TRACKER -Omni (1D482)	1	
-19	757 898	D	CABLE ASSEMBLY - Roll servo (30A211-8R)	1	

When ordering, always specify Part Number, Description, and Serial Number of Aircraft

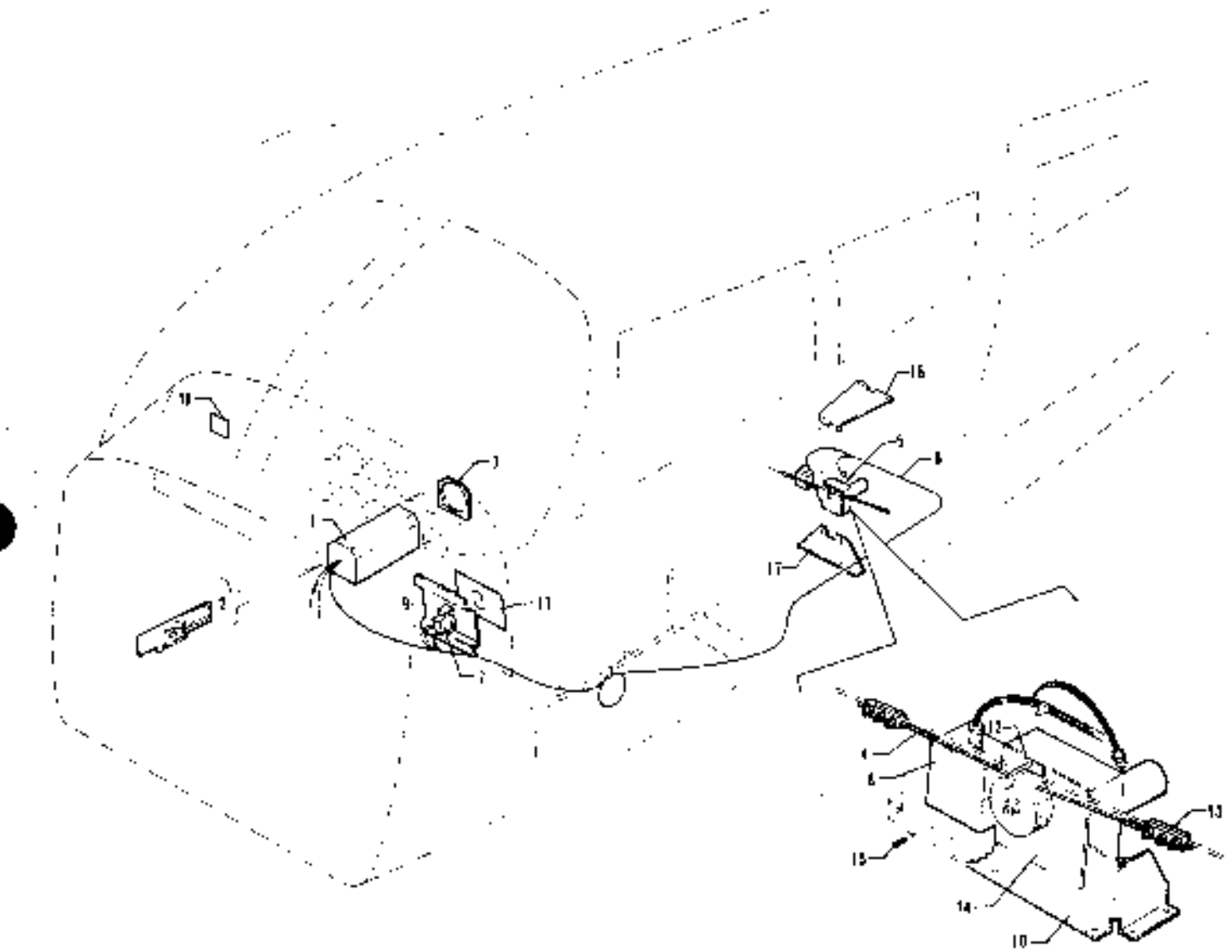

Figure 115 AutoFlite II Installation
(PA-32-260 - Serial Nos 32-7100001 and up)
(PA-32-300 - Serial Nos 32 7140001 and up)
(PA-32R-300 - Serial Nos 32R-7680001 and up)

CODE EXPLANATIONS FOR FIGURE 115

A - Used on PA-32-260 with serial numbers 32-7100001 and up, PA-32-300 with serial numbers 32-7140001 and up, and PA-32R-300.
B - Used if AutoFlite II without tracker is installed.
C - Used if AutoFlite II with tracker is installed.
D - Used on PA-32-260 and PA-32-300 only.
E - Used on PA-32R-300 only.
W - These parts must be ordered from Service Spares Department, Piper Aircraft, Lock Haven, Penna.

PIPER PARTS CATALOG

Figure and Index Number	Part Number	Code	NOMENCLATURE	No Req.	SERIAL NUMBERS AFFECTED
115-	99447		DRAWING - Auto Flite II Installation		
-1	52586-02	B,W	INSTRUMENT - Turn and bank (52D75-3)	1	
	755 432	C	INSTRUMENT - Turn and bank (52D75-4)	1	
-2	758 188	C	* TRACKER BOARD - Printed circuit (1D628)	1	
3	99209 00		PLATE - Turn and bank mounting	1	
-4	753 980		CABLE - Bridle (30B200)	1	
-5	757 878	D	CABLE ASSEMBLY - Roll servo (30A211-8R)	1	
-6	757 913		CABLE ASSEMBLY - (30C378-1)	1	
-7	487 801		SWITCH - (8134 K21A1V-50)	1	
-8	758 183		BOX - Relay (1A526)	1	
-9	56798-00		BRACKET - AutoFlite II	1	
-10	453 426	D	BRACKET - Servo mounting (7C511-2)	1	
11	99448-00		PLACARD - AutoFlite II	1	
-12	751 897		GUARD - Cable (7A506-1)	1	
-13	757 663	W	CLAMP ASSEMBLY - Bridle cable (42A173-1)	2	
-14	757 595	D	SERVO - Roll (1C363-1-183R)	1	
	762 245	E	SERVO - Roll (1C363-1-28BR)	1	
-15	757 579	W	* SET SCREW - Capstan (3S326)	1	
-16	758 345	E	BRACKET - Servo mounting, top (7C1595)	1	
-17	758 346	E	BRACKET - Servo mounting, bottom (7C1596)	1	
-18	454 656	W	CIRCUIT PROTECTOR - (PS50120-3-7) 5 amp	1	

When ordering, always specify Part Number, Description and Serial Number of Aircraft

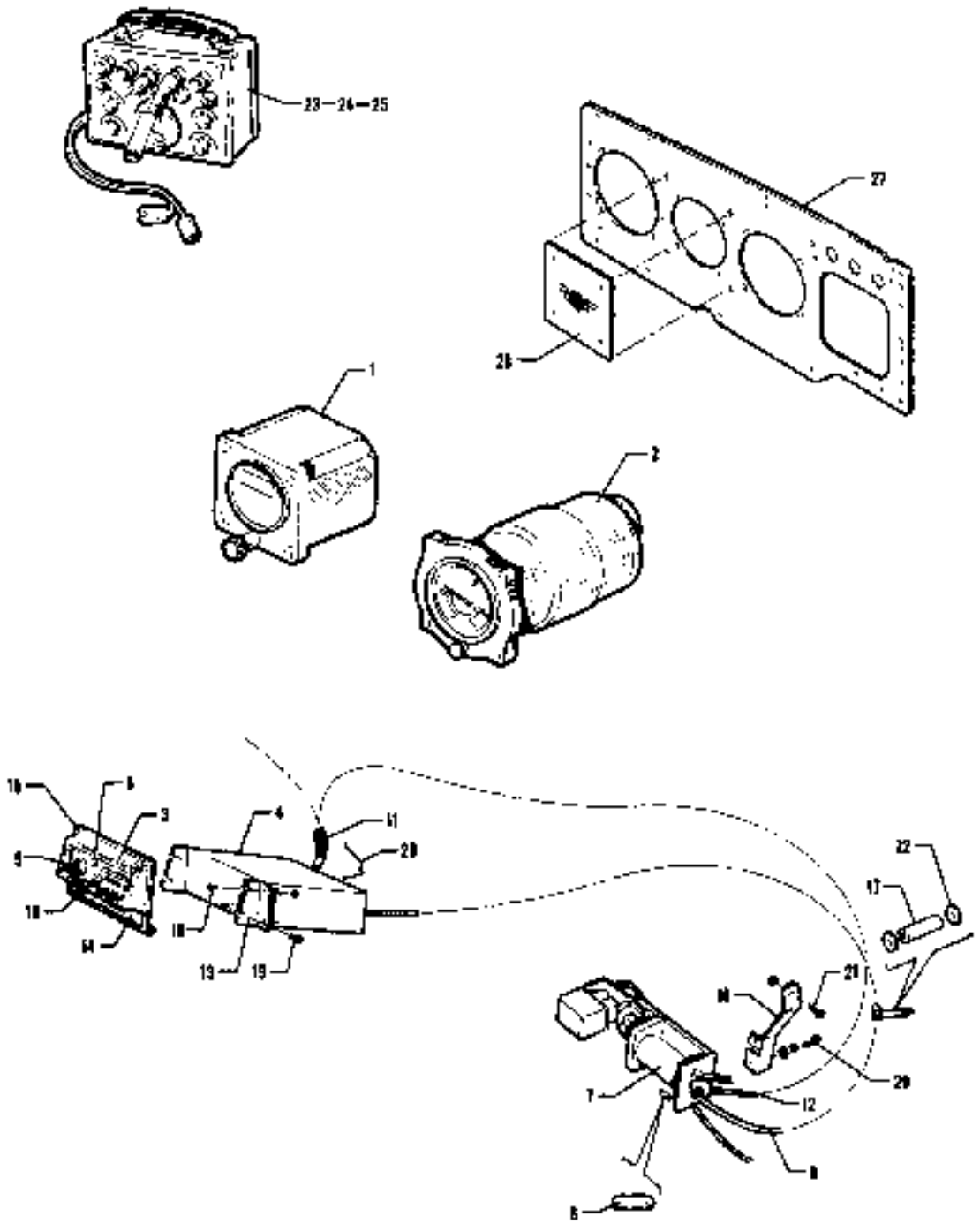

Figure 116. AutoControl II Installation

CODE EXPLANATIONS FOR FIGURE 116

A - Used on AutoControl with “O” heading only.
B - Used on AutoControl with course selector only.
C - No longer available.
D - Reference latest revision to Piper Service Letter 695 for proper inspection and maintenance procedures for the roll servo and the shear rivet installation which will disconnect the roll servo from the control system whenever pilot forces exceed a pre-determined value.
E - Part of 65663-02 Autopilot Kit. Must be procured from Mitchell Industries, Inc. or Edo-Aire Mitchell.

PIPER PARTS CATALOG

Figure and Index Number	Part Number	Code	NOMENCLATURE	No. Req.	SERIAL NUMBERS AFFECTED
116-	68880		DRAWING - AutoControl II Installation		
-1	550 640	A,C	INSTRUMENT - Directional gyro (30987-02)	1	
	550 643	B,C	INSTRUMENT - Directional gyro (31058-02)	1	
	550 779	B	INSTRUMENT - Directional gyro (32169-00) (3 inch)	1	
-2	550 642	C	INSTRUMENT - Gyro horizon (31053-02)	1	
	550 777		INSTRUMENT - Gyro horizon (32167-00) (3 inch)	1	
-3	62163-00	A	PLACARD - AutoControl II console	1	
	65524-00	B	PLACARD - AutoControl II console	1	
-4	751 262	E	AMPLIFIER - Complete (1X214E-3)	1	
-5	754 366		* KNOB - Turn and trim (36A77)	1	
-6	756 720		* BUTTON - Heading lock (36S93)	1	
-7	--- ---	C,D,E	MOTOR ASSEMBLY - Roll servo (1X221E-CH)	1	
-8	752 333	C,E	* LEVER - Engage (30A83)	1	
-9	753 876	C,E	* CABLE ASSEMBLY - Engage control (30A139-40)	1	
-10	756 716	C,E	* KNOB - Engage control cable (36S92)	1	
-11	751 954	E	HARNESS ASSEMBLY - (30B116-1)	1	
-12	751 525	E	CABLE ASSEMBLY - Servo motor (30A53-22)	1	
-13	62146-00		CLIP - Amplifier mounting, left	1	
	62146-01		CLIP - Amplifier mounting, right	1	
-14	62170-00		PLACARD - AutoControl II console	1	32-1 to 32-558 inclusive
-15	62198-03		PANEL - AutoControl trim	1	
-16	62280-00		BRACKET - Roll servo support	1	
-17	80012-27		BUSHING - Spacer	1	
-18	415 148		SCREW - (AN526-632R6)	4	
	404 909		NUT - (MS20365-632C)	4	
-19	415 104		SCREW - (4-40 x 1/4 L)	4	
	407 131		WASHER - (AN936-B4)	4	
-20	415 448		SCREW - (AN526-832R6)	2	
	407 103		WASHER - (AN935-8)	2	
	407 563		WASHER - (AN960-8)	2	
-21	400 437		BOLT - (AN3-3A)	1	
	407 564		WASHER - (AN960-10)	1	
	404 887		NUT - (MS20365-1032C)	1	
-22	401 274		BOLT - (AN3-15A)	1	
	407 564		WASHER - (AN960-10)	1	
	404 887		NUT - (MS20365-1032C)	1	
-23	751 412		TEST EQUIPMENT	1	
-24	756 737		ADAPTER - Test kit (66A44)	1	
-25	753 880		CABLE - Test (30B116-1-T)	1	
-26	65531-00		GUARD - Roll servo	1	
-27	68822-00		SUB-Panel - 3 inch gyros	1	
-28	11199-08		PLATE - Sub-panel hole cover	1	
-29	756 257		SPRING - Retainer	1	

When ordering, always specify Part Number, Description, and Serial Number of Aircraft

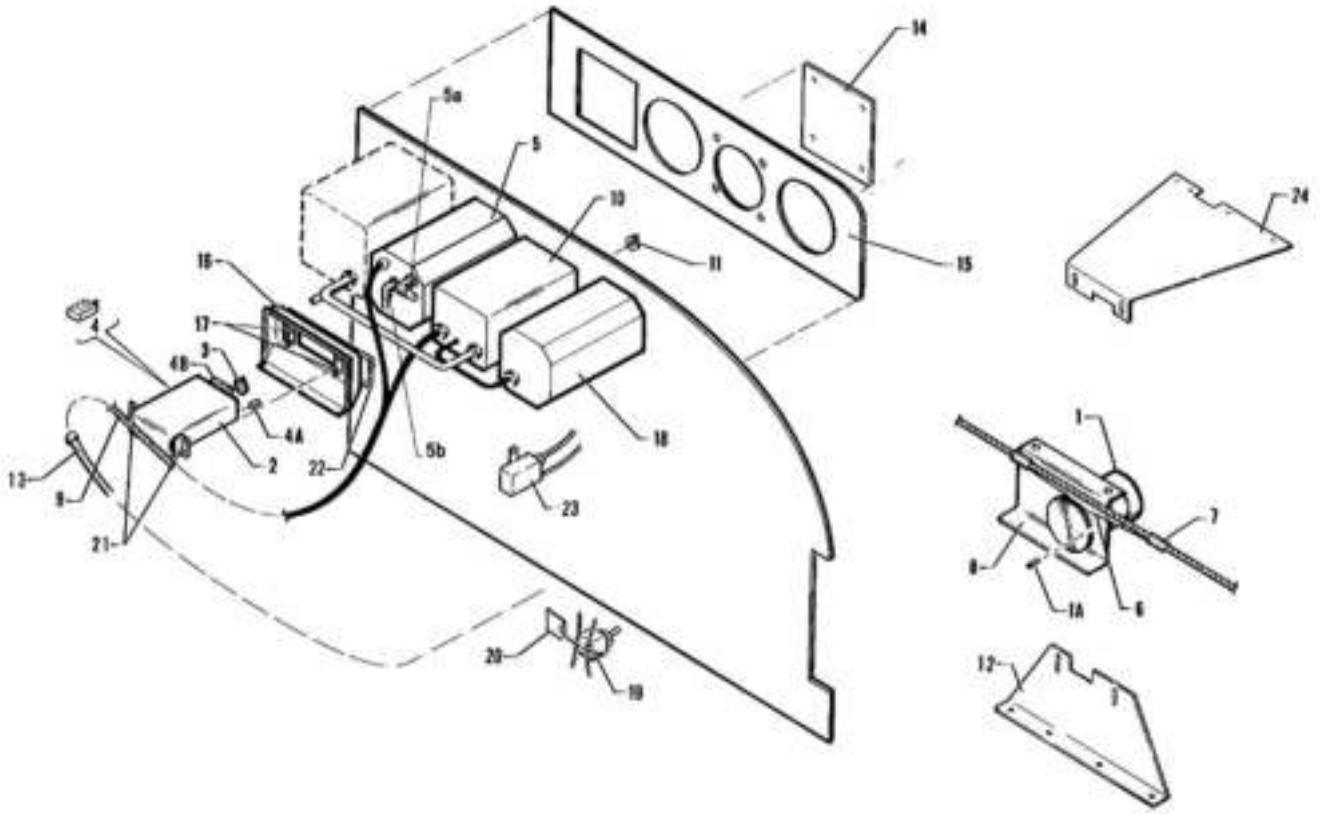

Figure 117. AutoControl III and III B Installation
(PA32-260 - Serial Nos. 32-451 and up)
(PA-32-300 - Serial Nos. 32-40000 and up)
(PA32R-300 - Serial Nos. 32R-7680001 and up)

CODE EXPLANATIONS FOR FIGURE 117

A - Used on PA-32-260 with serial numbers 32-451 and up, PA-32-300 with serial numbers 32-40000 and up, and PA-32R-300.
B - Used on PA-32-260 with serial numbers 32-1111 and up, PA-32-300 with serial numbers 32-40566 and up, and PA-32R-300.
C - Used when Dual Omni is installed.
D - Ascertain Servo Model Number when ordering.
E - When ordering, specify color “bark II” or black.
F - Used on PA-32-260 with serial numbers 32-1111 to 32-7300076 inclusive, and PA-32-300 with serial numbers 32-40566 to 32-7340201 inclusive.
G - Used on PA-32-260 with serial numbers 32-7400001 and up, PA-32-300 with serial numbers 32-7440001 and up, and PA-32R-300.
H - Used on PA-32-260 with serial numbers 32-451 to 32-7400061 inclusive, and PA-32-300 with serial numbers 32-40000 to 32-7440182 inclusive.
J - Used on PA-32-260 with serial numbers 32-7500001 and up, PA-32-300 with serial numbers 32-7540001 and up, and PA-32R-300.
K - Used on PA-32-260 with serial numbers 32-7600001 and up, PA-32-300 with serial numbers 32-7640001 and up, and PA-32R-300 if NSD-360 Navigation Situation Display Indicator is installed.
L - Used on PA-32R-300 only.
M - Used on PA-32-260 with serial numbers 32-451 to 32-1110 inclusive, and PA-32-300 with serial numbers 32-40000 to 32-40565 incl.
N - Used on PA-32-260 with serial numbers 32-1111 and up, PA-32-300 with serial numbers 32-40566 to 32-7940042 incl., and PA-32R-300.
O - Used on PA-32-300 only.
P - Reference latest revision to Piper Service Letter 566, applicable to PA-32-260 with serial numbers 32-043 to 1297 and PA-32-300 with serial numbers 32-40472 and 32-40474 to 32-40974 incl. Install III Series AutoPilot Servo Spacer Bushing Installation Kit P/N 760 508 to fill the space between the servo capstan and frame.
Q - Reference latest revision to Piper Service Letter 624, which provides details on installing an elbow fitting P/N 458 840 in the instrument case air inlet, for PA-32-300 with serial numbers 32-7240055, 32-7240059, 32-7240098 and 32-7240107 with an AltiMatic IIIB-1 Automated Flight Control System using an Edo-Aire gyro horizon.
R - Part of Autopilot Kit 65633-05 and 65633-08, applicable to PA-32-260, PA-32-300 and PA-32R-300. Autopilot Kits not sold.
S - Must be procured from Edo-Aire Mitchell or from Mitchell Industries Inc.
T - Reference latest revision to Piper Service Bulletin 279.
U - Reference latest revision to Piper Service Letter 577.

PIPER PARTS CATALOG

Figure and Index Number	Part Number	Code	NOMENCLATURE	No. Req.	SERIAL NUMBERS AFFECTED
117-	69122	M	DRAWING - AutoControl III Installation		
	69377	F	DRAWING - AutoControl III Installation		
	78250	G	DRAWING - AutoControl III and III B Installation		
-1	757 595	D,P,R	SERVO ASSEMBLY - Roll (1C363-1-183R)	1	
	--- ---	D,L,R,S	SERVO ASSEMBLY - Roll (1C363-1-269R)	1	
-1a	757 579		* SET SCREW - Capstan (3S326)	1	
-2	751 283	H,R	CONSOLE AMPLIFIER ASSEMBLY - AutoControl III (1C338 S/N 1 to 10000 inclusive)	1	
	758 023	J,R	CONSOLE AMPLIFIER ASSEMBLY - AutoControl IIIB (1C338 S/N 10001 and up)	1	
	758 078	K	CONSOLE AMPLIFIER ASSEMBLY - AutoControl III B (1C338-3)	1	
-3	757 052		* KNOB - (36A98)	1	
-4	757 581	H	* SWITCH - Engage (40A22-4)	2	
-4a	751 461	H	* BULB - Console (65S28)	2	
-4b	758 024	J	* CIRCUIT BOARD - Face plate light (includes 4 bulbs) (1B686)	1	
-5	--- ---	R,S	INSTRUMENT - Gyro horizon (52D66) (3 inch)	1	
	548 495	Q,S	INSTRUMENT - Gyro horizon (52D67)	1	32-7240055, 32-7240059, 32-7240098, 32-7240107
-5a	458 840	Q	ELBOW FITTING - (AN915-2D)	1	
-5b	560 835	Q	ARM FITTING - (1K31-4-6-4)	1	
-6	753 980	R,T	CABLE ASSEMBLY - Bridle (30B200)	1	
-7	757 863	R,U	CLAMP ASSEMBLY - Bridle cable (42A173-1)	2	
-8	453 426		BRACKET - Servo mounting (7C511-2)	1	
-9	751 987	R	HARNESS ASSEMBLY - Amplifier (30C198)	1	
-10	551 114		COUPLER ASSEMBLY - Omni (25690-00)	1	
	25690-02	K	COUPLER ASSEMBLY - Omni	1	
-11	757 052		* KNOB - (36A98)	1	
-12	758 346	L	BRACKET - Servo mounting, bottom (7C1596)	1	
-13	758 002		CABLE ASSEMBLY - Roll servo extension (30C211-156R)	1	
-14	11199-08	M	PLATE - Hole cover	1	
-15	68822-00	M	SUB-PANEL - 3 inch gyro	1	
-16	69121-00	M	COVER - AutoControl III console	1	
-17	62145-00	M	ANGLE - Console mounting	2	
	67494-00	B	ANGLE - Console mounting, left	1	
	67494-01	B	ANGLE - Console mounting, right	1	
-18	--- ---	R,S	INSTRUMENT - Directional gyro (52D57P) (3 inch)	1	
-19	688 164	B,C	SWITCH - Coupler (MTG206P)	1	
-20	69509-00	C,N	PLACARD - Omni coupler switch	1	
	35669-126	C,O	PLACARD - Omni coupler switch	1	32-7940043 and up
-21	69142-00	M	CLIP - Console mounting	2	
-22	79560-00	E,G	COVER - Console amplifier	1	
-23	--- ---	L,R	FILTER - Roll signal (1B440-2)	1	
-24	758 345	L,R	BRACKET - Servo mounting, top (7C1595)	1	

When ordering, always specify Part Number, Description, and Serial Number of Aircraft

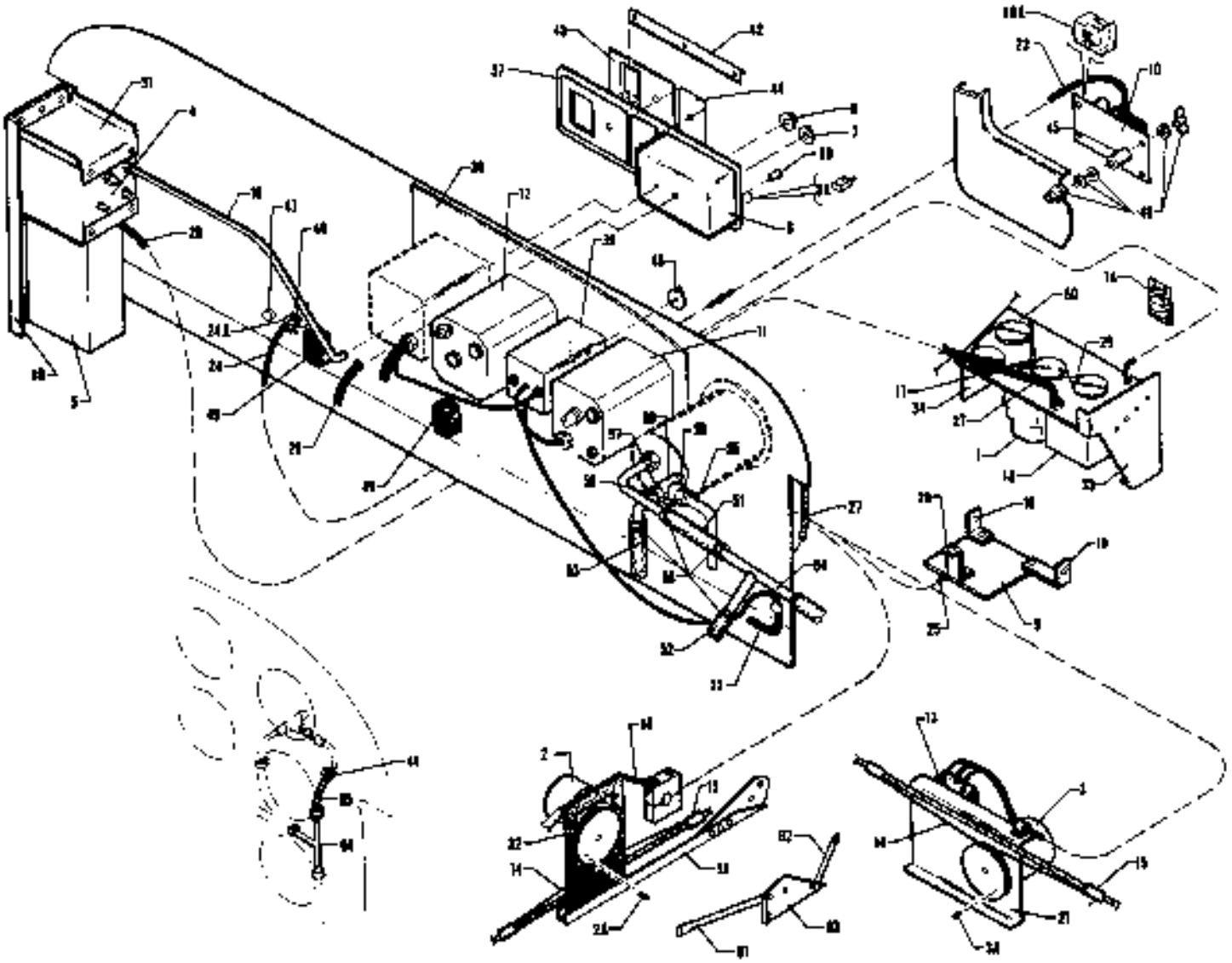

Figure 11B. AidMatic III Installation
(PA-32-260 - Serial Nos. 32-451 to 32-1110 Incl.)
(PA-32-300 - Serial Nos. 32-40000 to 32-40565 Incl.)

CODE EXPLANATIONS FOR FIGURE 118

A - Used on PA-32-260 with serial numbers 32-451 to 32-1110 incl., and PA-32-300 with serial numbers 32-40000 to 32-40565 incl.
B - Ascertain Servo Model Number when ordering.
C - Used with Trim Servo Assembly 1D345.
D - Used with Trim Servo Assembly 1C345-1.
E - Used on PA-32-260 with serial numbers 32-876 and up, and PA-32-300 with serial numbers 32-40002 and up.
F - Used on PA-32-260 with serial numbers 32-451 to 32-875 incl., and PA-32-300 with serial numbers 32-40000 to 32-40001.
G - Reference latest revision to Piper Service Letter 566, applicable to PA-32-260 with serial numbers 32-043 to 1297 and PA-32-300 with serial numbers 32-40472 and 32-40474 to 32-40974 incl. Install III Series AutoPilot Servo Spacer Bushing Installation Kit 760-508 to fill the space between the servo capstan and frame.
H - No longer available.
J - Reference latest revision to Piper Service Letter 577.

PIPER PARTS CATALOG

Figure and Index Number	Part Number	Code	NOMENCLATURE	No. Req.	SERIAL NUMBERS AFFECTED
118-	68820		DRAWING - AltiMatic III Installation		
-1	753 693	B	SERVO ASSEMBLY - Trim (1D345)	1	
	757 590	B	SERVO ASSEMBLY - Trim (1C345-1)	1	
-1a	751 276	C	* AMPLIFIER ASSEMBLY - Trim servo (1B346)	1	
-1b	751 301	D	* AMPLIFIER ASSEMBLY - Trim servo (79C53-1)	1	
-2	753 721	B	SERVO ASSEMBLY - Pitch (1D363-183P)	1	
	757 596	B	SERVO ASSEMBLY - Pitch (1C363-1-183P)	1	
-2a	757 579		* SET SCREW - Capstan (3S326)	1	
-3	753 721	B,H	SERVO ASSEMBLY - Roll (1D363-183R)	1	
	757 595	B,G	SERVO ASSEMBLY - Roll (1C363-1-183R) (Edo-Aire Mitchell)	1	
-3a	757 579		* SET SCREW - Capstan (3S326)	1	
-4	757 539		ALTITUDE SELECTOR - (1D391-183)	1	
-5	751 284		AMPLIFIER ASSEMBLY - (1D395)	1	
-6	757 807		CONSOLE ASSEMBLY - (1D396)	1	
-7	757 052		* KNOB - Roll (36A98)	1	
-8	757 051		* KNOB - Selector (36A123)	1	
-8a	757 581		* SWITCH - Engage (40A22-4)	4	
-8b	751 461		* BULB - Console (65S28)	4	
-9	757 551		SENSOR ASSEMBLY - Trim (1C377-176)	1	
-10	751 278		AMPLIFIER ASSEMBLY - Gyro (1C359-1)	1	
-10a	756 052		* RELAY - Gyro amplifier (80S11)	1	
-11	550 778		INSTRUMENT - Directional gyro (32168-00) (3 inch)	1	
-12	550 781		INSTRUMENT - Gyro horizon (32173-00) (3 inch)	1	
-13	755 990		SWITCH BOX - Stabilizer (1B405)	1	
-14	753 980		CABLE - Bridle (30B200)	2	
-15	757 863	J	CLAMP ASSEMBLY - Bridle cable (42A173-1)	4	
-16	32212-03		SHAFT - Flexible (81A16-183)	1	
-17	751 906		GUARD - Cable (7A546)	1	
-18	758 105		BRACKET - Trim sensor mounting (7A542)	1	
-19	758 106		BRACKET - Trim sensor mounting (7A543)	1	
-20	758 107		BRACKET - Trim sensor mounting (7A544)	1	
-21	753 460		BRACKET - Roll servo mounting (7C511)	1	
-22	68870-02		HARNESS ASSEMBLY - Audio	1	
-23	753 977		CABLE ASSEMBLY - (30B184-4)	1	
-24	753 979		CABLE ASSEMBLY - (30B208-1)	1	
-24a	757 296		* POTENTIOMETER - (18A18-2)	1	
-25	757 817		CABLE ASSEMBLY - (30B155-1)	1	
-26	757 818		CABLE ASSEMBLY - (30B156-42)	1	
-27	757 819		CABLE ASSEMBLY - (30B174-1)	1	
-28	757 820		CABLE ASSEMBLY - (30D207-1)	1	
-29	62701-42		CABLE ASSEMBLY - Stabilator trim	1	
-30	68144-00		BRACKET - Amplifier mounting	1	
-31	68145-00		BRACKET - Altitude selector	2	
-32	68149-00		BRACKET ASSEMBLY - Pitch servo	1	
-33	68674-00		BRACKET ASSEMBLY - Pitch trim servo	1	
-34	68676-00		BRACKET - Pitch trim servo	1	
-35	68146-00		CHANNEL ASSEMBLY - Pitch servo support	1	
-36	68841-00	F	TUBE - Pitch servo support	1	
-37	69043-00		COVER - AltiMatic console	1	
-38	68822-00		SUB-PANEL - Gyro	1	
-39	551 114		COUPLER - Radio 925690-00) (for D.C. Converter)	1	
	757 905		COUPLER - Radio (1C388P-C) (for A.C. Converter)	1	
-40	757 052		* KNOB - (36A98)	1	
-41	554 861		CLAMP - Alternate static line tee (SAE TY F-4)	3	

When ordering, always specify Part Number, Description, and Serial Number of Aircraft

PIPER PARTS CATALOG

Figure and Index Number	Part Number	Code	NOMENCLATURE	No Req.	SERIAL NUMBERS AFFECTED
116-42	69016-00		CHANNEL - Instrument panel trim	1	
-43	69069-00		PLATE - Console cover	1	
-44	69071-00		PLATE - Console cover	1	
-45	467 066		ISOLATOR - Vibration (JA6984-8)	4	
-46	404 751		NUT - Wing (AN350-832)	4	
	407 134	W	WASHER - (AN935-A8)	8	
	407 683	W	WASHER - (AN960-8L)	4	
	406 883	W	RIVNUT - (A8K-75)	4	
-47	467 901		SWITCH - (8134-K21A1V-50)	1	
-48	571 087		KNOB - Black (RB-31)	1	
-49	454 656	W	CIRCUIT BREAKER - (PS50120-3-7)	2	
-50	481 640		PULLEY - Trim cable (MS24565-18)	2	
-51	63913-43		HOSE - Altitude selector pressure	1	
-52	63913-61		HOSE - Altitude selector pressure	1	
-53	63913-60		HOSE - Altitude selector static	1	
-54	68193-00		TEE ASSEMBLY - Airspeed pressure line	1	
55	63211-00		TUBE ASSEMBLY - Airspeed static	1	
-56	454 923	W	CLAMP - (SAE 9)	4	
-57	476 647	W	NIPPLE - Airspeed indicator (AN816-3D)	1	
-58	458 929	W	ELBOW - Airspeed indicator (AN842-4D)	1	
-59	476 643	W	NIPPLE - Airspeed indicator (AN911-1D)	1	
-60	488 474	W	TEE - Airspeed indicator (AN917-1D)	1	
-61	69161-00	E	TUBE - Servo support	1	
-62	69162-00	E	TUBE - Servo support	1	
63	69163-00	E	BRACKET - Servo support	1	
-64	68193-00		TEE ASSEMBLY - Alternate static line	1	
-65	63913-56		HOSE - Alternate static line tee	1	

When ordering, always specify Part Number, Description and Serial Number of Aircraft

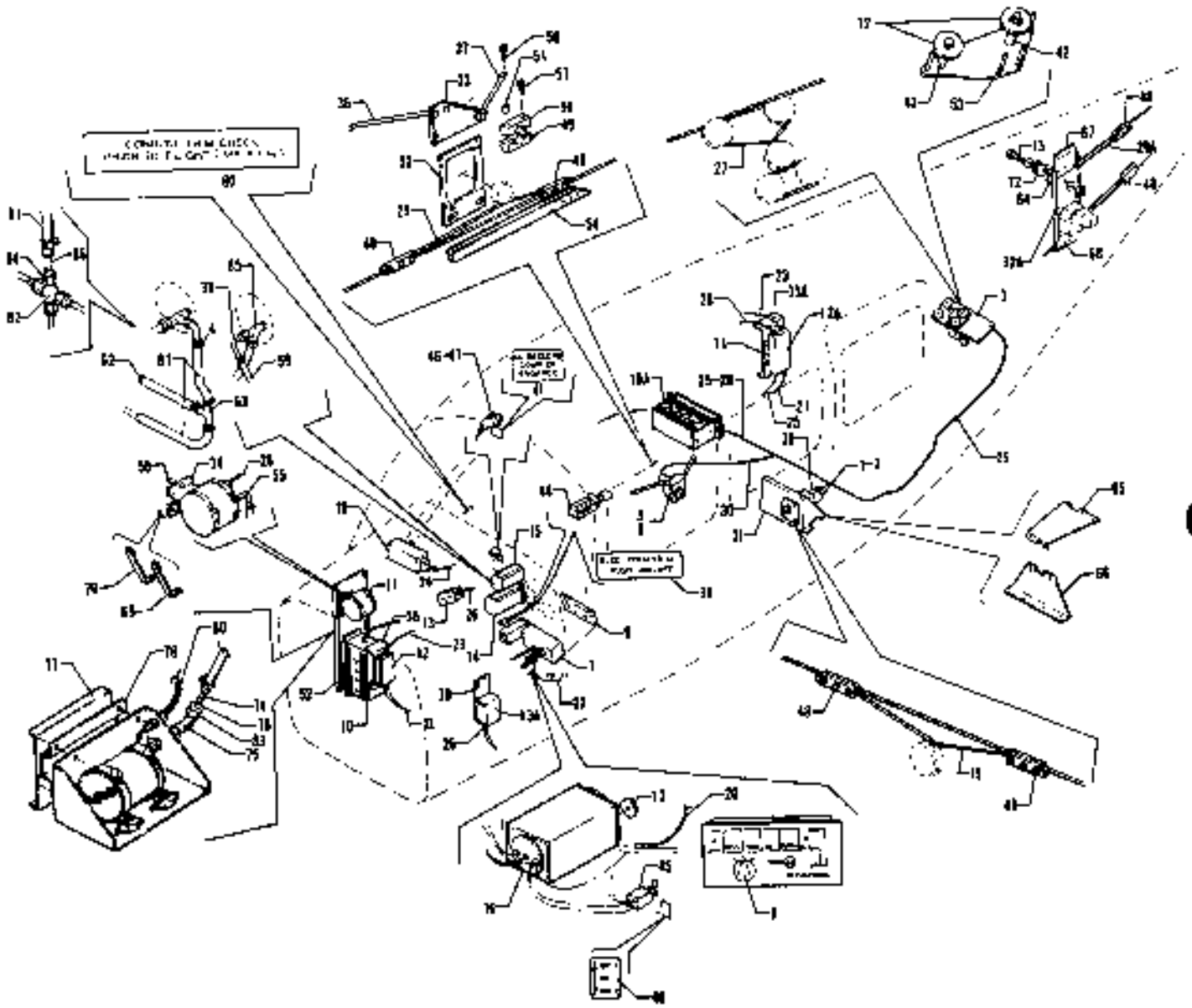

Figure 119 AltiMatic III C Installation
(PA-32-260 - Serial Nos 32-7500001 and up)
(PA-32-300 - Serial Nos 32-7540001 to 32-7840222 incl.)
(PA-32R-300 - Serial Nos 32R-7680001 and up)

CODE EXPLANATIONS FOR FIGURE 119

A - Used on PA-32-260 with serial numbers 32-7500001 and up, PA-32-300 with serial numbers 32-7540001 to 32-784-222 incl., and PA-32R-300.
B - Used when Glide Slope Coupler is installed.
C - Used when Dual Omni Coupler is installed.
D - Used if Alternate Static System is installed.
E - Used on PA-32R-300 only.
F - Used on PA-32-260 and PA-32-300 only.
G - Used if NSD-360 Navigation Situation Display Indicator is installed.
H - Used on PA-32-260 with serial numbers 32-7600001 to 32-7700023 incl., PA-32-300 with serial numbers 32-7680001 to 32-7740113 incl., and PA-32R-300 with serial numbers 32R-7680001 to 32R-7780549 incl.
J - Used on PA-32-260 with serial numbers 32-7800001 and up, and PA-32-300 with serial numbers 32-7840046 to 32-7840222 incl.
K - Used on PA-32-260 with serial numbers 32-7500001 to 32-7700023 inclusive, PA-32-300 with serial numbers 32-7540001 to 32-7840045 inclusive, and PA-32R-300 with serial numbers 32R-7680001 and up.
L - Used on PA-32-260 with serial numbers 32-7500001 to 32-7700023 inclusive, PA-32-300 with serial numbers 32-7540001 to 32-7840045 inclusive, and PA-32R-300 with serial numbers 32R-7680001 to 32R-7780417 incl.
M - Used on PA-32-260 with serial numbers 32-7800001 and up, PA-32-300 with serial numbers 32-7840046 to 32-784022 incl., and PA-32R-300 with serial numbers 32R-7780418 and up.
N - Used on PA-32-260 with serial numbers 32-7500001 to 32-7700023 inclusive, and PA-32-300 with serial numbers 32-7540001 to 32-7840045 inclusive.
O - Used on PA-32-260 with serial numbers 32-7800001 and up, PA-32-300 with serial numbers 32-7840046 to 32-7840222 incl., and PA-32R-300 with serial numbers 32R-7680001 and up.
P - Used on PA-32-260 with serial numbers 32-7800001 to 32-7800008 incl., and PA-32-300 with serial numbers 32-7840001 to 32-7840222 incl., and PA-32R-300 with serial numbers 32R-7880001 to 32R-7880068 incl.
Q - Reference latest revision to Piper Service Letter 566, applicable to PA-32-260 with serial numbers 32-043 to 1297 and PA-32-300 with serial numbers 32-40472 and 32-40474 to 32-40974 incl. Install III Series AutoPilot Servo Spacer Bushing Installation Kit 760-508 to fill the space between the servo capstan and frame.
R - Reference latest revision to Piper Service Bulletin 669.

PIPER PARTS CATALOG

Figure and Index Number	Part Number	Code	NOMENCLATURE	No. Req.	SERIAL NUMBERS AFFECTED
119-	69855		DRAWING - AltiMatic III C Installation		
-1	--- ---	Q	SERVO ASSEMBLY - Roll (1C363-1-269R) (Mitchell Industries Inc.)	1	
-2	757 579		* SET SCREW - Capstan (3S326)	1	
-3	762 246	F	SERVO ASSEMBLY - Trim (1C373-6-488)	1	
	762 251	E	SERVO ASSEMBLY - Trim (1C373-6-529)	1	
-4	554 861	D	CLAMP - (SAE TY F-4)	3	
-5	762 247	F	SERVO ASSEMBLY - Pitch (1C508-1-183P)	1	
	762 252	E	SERVO ASSEMBLY - Pitch (1C508-1-529P)	1	
-6	757 579		* SET SCREW - Capstan (3S326)	1	
-7	758 026		CONSOLE - AltiMatic III C (1D720)	1	
-8	760 899		* KNOB - Roll (36B141)	1	
-9	757 456		* PLATE - Face (13C767) (with 6 bulbs)	1	
-10	751 314	L	AMPLIFIER - (1C515-1)	1	
-10a	751 314	M	AMPLIFIER - (1C515-1)	1	
-11	751 287	N	ALTITUDE HOLD - (1C407)	1	
	751 347	O	ALTITUDE HOLD - (1C725) (includes 1C535-1 controller, mounting brackets and shock mounts)	1	
-12	751 342	N	AMPLIFIER - Trim (1C709-5)	1	
-12a	763 008	E	AMPLIFIER - Trim (1C709-16)	1	
	751 342	J	AMPLIFIER - Trim (1C709-5)	1	
-13	758 181	L	BOX - Relay (1A526)	1	
-13a	758 181	M	BOX - Relay (1A526)	1	
-14	550 778		INSTRUMENT - Directional gyro (32168-00)	1	
	755 472	H	INSTRUMENT - Horizontal situation indicator, unslaved (NSD-360-(11)/52D136-1120)	1	
	596 755	P	INSTRUMENT - Horizontal situation indicator, unslaved (NSD-360A/52D136-1333)	1	
-15	550 559		INSTRUMENT - Attitude gyro (32173-02)	1	
-16	551 114		COUPLER ASSEMBLY - Omni (25690-00)	1	
	25690-02	G	COUPLER ASSEMBLY - Omni	1	
-17	757 052		* KNOB - (36A98)	1	
-18	751 300		COUPLER ASSEMBLY - Glide slope (1C493)	1	
-19	753 980		CABLE ASSEMBLY - Bridle (30B200)	1	
-20	596 236	B	CABLE ASSEMBLY - Bridle (30B295-1)	1	
-21	758 071	L	CABLE ASSEMBLY - (30B174-5)	1	
	763 222	M	CABLE ASSEMBLY - (30C174-11)	1	
-22	758 072	L	CABLE ASSEMBLY - (30B156-8)	1	
	763 221	E	CABLE ASSEMBLY - (30C156-2)	1	32R-7780418 and up
	763 248	J	CABLE ASSEMBLY - (30C156-8)	1	
-23	758 073	L	CABLE ASSEMBLY - (30D207-20)	1	
	763 225	M	CABLE ASSEMBLY - (30D207-31)	1	
-24	596 235	B	CABLE ASSEMBLY - (30C291-1)	1	
-25	758 028	L	CABLE ASSEMBLY - (30C481-7)	1	
	763 223	M	CABLE ASSEMBLY - (30C481-27)	1	
-26	757 959	K	CABLE ASSEMBLY - (30B340-2)	1	
	758 052	J	CABLE ASSEMBLY - (30B340-3)	1	
-27	62701-135	R	CABLE ASSEMBLY - Control stabilator trim, forward	1	
-28	758 075	N	CABLE ASSEMBLY - (30C481-11)	1	
	763 270	E	CABLE ASSEMBLY - (30C481-1)	1	
	763 224	J	CABLE ASSEMBLY - (30C481-28)	1	
-29	753 980	F	CABLE ASSEMBLY - (30B200)	1	
-29a	758 079	E	CABLE ASSEMBLY - (30B507)	1	
-30	758 001	L	CABLE EXTENSION - (30C211-8R)	1	
-31	453 425	F	BRACKET - Roll servo mounting (7C511-3)	1	
-32	68149-00	F	BRACKET ASSEMBLY - Pitch servo mounting	1	

When ordering, always specify Part Number, Description, and Serial Number of Aircraft

PIPER PARTS CATALOG

Figure and Index Number	Part Number	Code	NOMENCLATURE	No. Req.	SERIAL NUMBERS AFFECTED
119-32a	758 348	E	BRACKET - Pitch servo mounting (7D1801)	1	
-33	69163-00	F	BRACKET - Pitch servo support	1	
-34	758 328	N	BRACKET - Altitude hold (7B544)	1	
35	79534-00	N	BRACKET - Pitch trim amplifier	1	
-35a	758 349	E	BRACKET - Pitch trim amplifier (7C1538)	1	32R-7680001 to 32R-7780417 incl
	758 404	M	BRACKET - Pitch trim amplifier (7C1786)	1	
-36	69161-00	F	TUBE - Pitch servo support	1	
-37	69162-00	F	TUBE - Pitch servo support	1	
38	63211-00		TUBE ASSEMBLY - Static	1	
-39	87490-02		PLACARD - Electric pitch trim	1	
-40	96734-00	C	PLACARD - Omni coupler	1	
-41	69669-10	B	PLACARD - Glide slope coupler	1	
-42	95081-115		BUSHING - Pitch trim servo (.44 long)	1	
43	95081 118		BUSHING - Pitch trim servo (.31 long)	1	
44	87445-02		SWITCH ASSEMBLY	1	
-45	888 164	C	SWITCH - Omni coupler (MTG-206P)	1	
-46	596 244	B	LIGHT ASSEMBLY - (308412-1)	1	
-47	761 173	B	* LAMP - (66S16)	1	
-48	757 883	W	CLAMP ASSEMBLY - Bridle cable (42A173-1)	4	
-49	62745-02	F	PILLOW BLOCK ASSEMBLY	1	
-50	62745-03	F	PILLOW BLOCK ASSEMBLY	1	
51	80022-104	F	BUSHING	1	
-52	68144-00	N	BRACKET - Amplifier mounting	1	
-53	761 906		GUARD - Cable (7A548)	1	
-54	68146-00	F	CHANNEL SUPPORT - Pitch servo	1	
-55	458 948	N,W	ELBOW - (1K1-2-4)	1	
-56	401 279	E,W	BOLT - (AN3-25A)	1	
-57	400 448	E,W	BOLT - (AN3-22A)	1	
-58	781 606	N	MOUNT - Shock, altitude hold (75S1)	3	
-59	63913 139		HOSE	1	
-60	757 459		PLACARD - Conduct trim check, see A F M (13A660)	1	
	763 418		PLACARD - Conduct trim check, see P O H (13A660-1)	1	
-61	63913-70	D	HOSE - Alternate static (22" L)	1	
-62	63913-138	D,L	HOSE - Alternate static (54.50" L)	1	
	63913-168	D,E	HOSE - Alternate static (57.50" L)	1	32R-7780418 and up
-63	68193-04	K	TEE - Alternate static	1	
-64	756 355	E	BRACKET - (7A972-2)	1	
-65	758 345	E	BRACKET - Servo mounting, top (7C1595)	1	
-66	758 346	E	BRACKET - Servo mounting, bottom (7C1596)	1	
-67	758 350	E	BRACKET - Pitch servo mounting (7B1599)	1	
-68	758 351	E	BRACKET - Pitch servo mounting (7B1600)	1	
-69	758 352	E	BRACKET - Altitude hold mounting, left (7B1598)	1	32R-7680001 to 32R-7780417 incl
-70	758 353	E	BRACKET - Altitude hold mounting, right (7B1604)	1	32R-7680001 to 32R-7780417 incl
-71	758 354	D	BRACKET - Pitch trim amplifier (7A1445)	2	
-72	481 640	E	PULLEY - (MS24566-1B)	1	
-73	401 272	E	BOLT - (AN3H-14A)	1	
	756 673	E	WASHER - (4531)	2	
	407 564	E,W	WASHER - (AN960-10)	2	
	404 887	E,W	NUT - (MS20365-1032C)	2	
-74	79636-04	M	TUBE - Altitude hold	2	
-75	458 883	M,W	ELBOW - (AN822-3D)	1	
-76	477 611	M	COUPLING - (AN818-3D)	1	
-77	758 417	M	BRACKET - Altitude hold (7C1863)	1	
-78	758 405	M	BRACKET - Altitude hold (7B1774-1)	1	
-79	758 416	M	BRACKET - Relay box (7B1822)	1	
-80	783 220	M	CABLE ASSEMBLY - (30A246-24)	1	
-81	63913 36	J	HOSE	1	
-82	455 417	J	CROSS - (AN827-3D)	1	
	466 316	J,W	TEE - (AN824-3D)	1	

When ordering, always specify Part Number, Description and Serial Number of Aircraft

PIPER PARTS CATALOG

Figure and Index Number	Part Number	Code	NOMENCLATURE	No. Req.	SERIAL NUMBERS AFFECTED
119-83	488 896	M	SLEEVE - (MS20819-3D)	1	
-84	477 611	J	COUPLING - (AN816-3D)	1	
-85	488 310	W	TEE - (MS20626-3D)	1	
-86	488 896	J	SLEEVE - (MS20819-3D)	1	

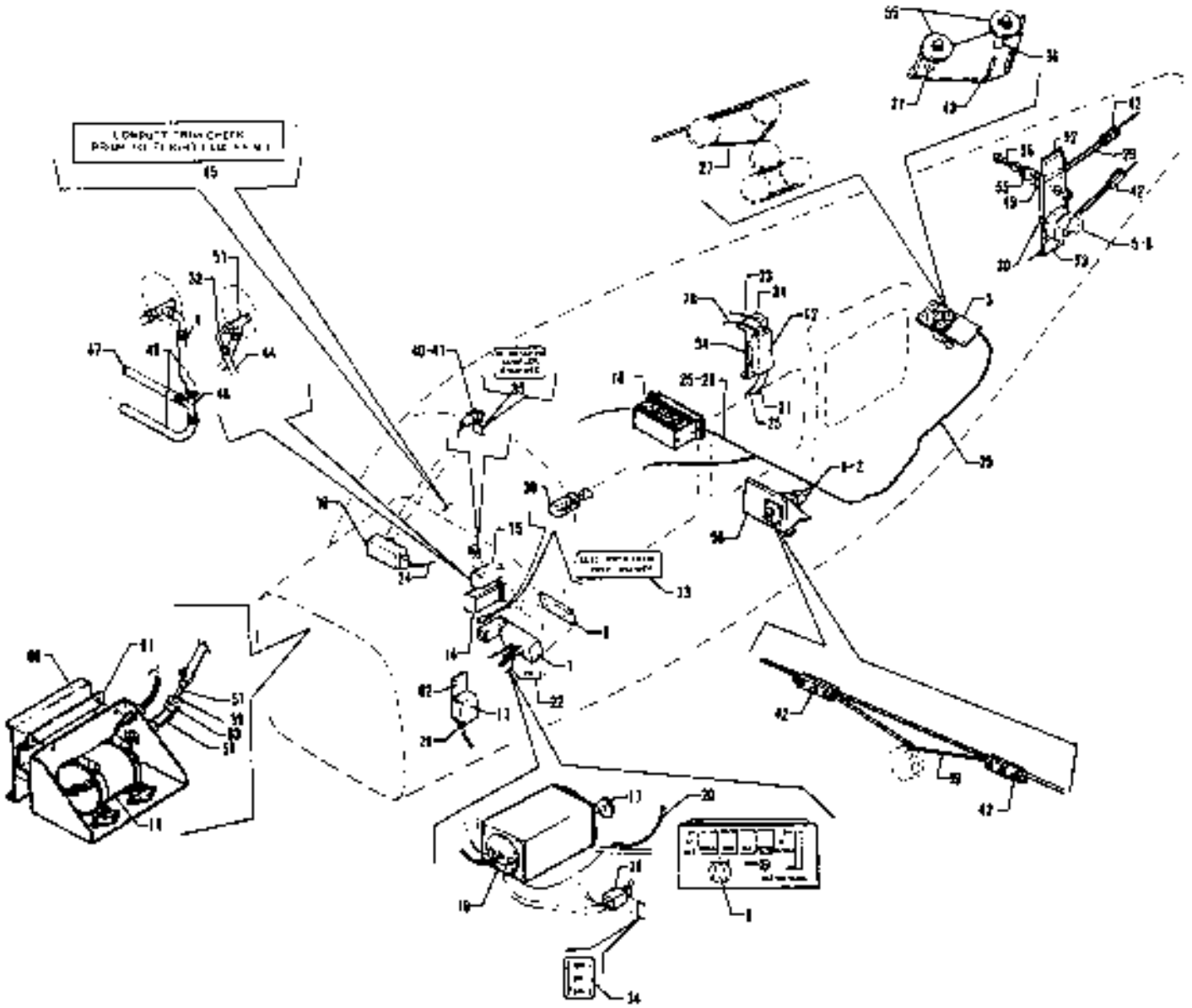

Figure 119A AltiMatic III C Installation
(PA-32-300 - Serial Nos 32-7940001 and up)

CODE EXPLANATIONS FOR FIGURE 119A

A - Used if NSD-360 Navigation Situation Display Indicator is installed
B - Used when Glide-Slope Coupler is installed
C - Used when Dual Omni Coupler is installed
D - Used if Alternate Static System is installed
W - These parts must be ordered from Service Spares Department, Piper Aircraft, Lock Haven, Penna

PIPER PARTS CATALOG

Figure and Index Number	Part Number	Code	NOMENCLATURE	No. Req.	SERIAL NUMBERS AFFECTED
119A-	38482		DRAWING - AltiMatic III C Installation		
-1	762 245		SERVO ASSEMBLY - Roll (1C363-1-268R)	1	
-2	767 578	W	* SET SCREW - Capstan (3S326)	1	
3	762 251		SERVO ASSEMBLY - Trim (1C373-6-529)	1	
-4	594 861	W	CLAMP - (SAE TY F-4)	5	
-5	762 387		SERVO ASSEMBLY - Pitch (1C-608-1-775R)	1	
-6	767 578	W	* SET SCREW - Capstan (3S326)	1	
7	758 026	W	CONSOLE - AltiMatic III C (1D720)	1	
-8	760 899	W	* KNOB - Roll (368141)	1	
-9	757 456	W	* PLATE - Face (13C787) (with 6 bulbs)	1	
-10	751 314		AMPLIFIER (1C515-1)	1	
11	751 347		ALTITUDE HOLD - (1C725) (includes 1C535-1 controller, mounting brackets and shock mounts)	1	
-12	763 008		AMPLIFIER - Trim (1C708-18)	1	
-13	758 181		BOX - Relay (1A526)	1	
-14	550 778	W	INSTRUMENT - Directional gyro (32168-00)	1	
	696 766	W	INSTRUMENT - Horizontal situation indicator, unslaved INSD-360-A/5ZD136-1333)	1	
15	550 569	W	INSTRUMENT - Attitude gyro (32172-02)	1	
-16	551 114	W	COUPLER ASSEMBLY - Omni (25880-00)	1	
	25690-02	A W	COUPLER ASSEMBLY - Omni	1	
-17	757 052	W	* KNOB - (36A98)	1	
-18	751 300	W	COUPLER ASSEMBLY - Glide slope (1C493)	1	
-19	753 980		CABLE ASSEMBLY - Bridle (308200)	1	
20	596 238	B	CABLE ASSEMBLY - (308295-1)	1	
-21	763 222		CABLE ASSEMBLY - (30C174-11)	1	
-22	763 248		CABLE ASSEMBLY - (30C156-8)	1	
-23	763 225		CABLE ASSEMBLY - (30D207-31)	1	
-24	596 235	B	CABLE ASSEMBLY - (30C291-1)	1	
-25	763 223		CABLE ASSEMBLY - (30C481-27)	1	
-26	758 052		CABLE ASSEMBLY - (308340-3)	1	
-27	62701-135		CABLE ASSEMBLY - Control stabilator trim, forward	1	
-28	763 270		CABLE ASSEMBLY - (30C481-1)	1	
-29	758 079		CABLE ASSEMBLY - (308507)	1	
-30	758 348		BRACKET - Pitch servo mounting (701601)	1	
-31	758 404		BRACKET - Pitch trim amplifier (7C1788)	1	
-32	63211-00		TUBE ASSEMBLY - Static	1	
-33	87480-02		PLACARD - Electric pitch trim	1	
-34	98734-00	C	PLACARD - Omni coupler	1	
35	69669-40	B	PLACARD - Glide slope coupler	1	
-36	95061-116		BUSHING - Pitch trim servo	1	
-37	95061-118		BUSHING - Pitch trim servo	1	
-38	87445-02		SWITCH ASSEMBLY	1	
-39	688 164	C	SWITCH - Omni coupler (MTG-206P)	1	32-7940001 to 32-7940042 incl
	588 110	C	SWITCH - Omni coupler (MS35059-21)	1	32-7940043 and up
-40	596 244	B	LIGHT ASSEMBLY - (308412-1)	1	
-41	761 173	B	* LAMP - (65S16)	1	
-42	757 863	W	CLAMP ASSEMBLY - Bridle cable (42A173-1)	4	
-43	751 906		GUARD - Cable (7A548)	1	
-44	63913-139		HOSE	1	
-45	763 418		PLACARD - Conduct trim check, see P.O.H. (13A660-1)	1	
-46	63913-70	D	HOSE - Alternate static (22" L)	1	
-47	63913-138	D	HOSE - Alternate static (54.50" L)	1	
-48	68193-04		TEE - Alternate static	1	
-49	758 365		BRACKET - (7A972-2)	1	

When ordering, always specify Part Number, Description and Serial Number of Aircraft

PIPER PARTS CATALOG

Figure and Index Number	Part Number	Code	NOMENCLATURE	No. Req.	SERIAL NUMBERS AFFECTED
119A-50	453 425		BRACKET - Roll servo mounting (7C511-3)	1	
-51	488 310	W	TEE - (MS20826-3D)	1	
-52	758 360		BRACKET - Pitch servo mounting (7B1599)	1	
-53	758 361		BRACKET - Pitch servo mounting (7B1600)	1	
-54	758 354		BRACKET - Pitch trim amplifier (7A1445)	2	
-55	481 640		PULLEY - (M524588-15)	3	
-56	401 261		BOLT - (AN3H-12A)	1	
	756 673		WASHER - (4S31)	2	
	407 564	W	WASHER - (AN960-10)	2	
	404 887	W	NUT - (MS20365-1032C)	1	
-57	79636-04		TUBE - Attitude hold	2	
-58	458 893	W	ELBOW - (AN822-3D)	1	
-59	477 811		COUPLING - (AN818-3D)	1	
-60	758 417		BRACKET - Attitude hold (7C1863)	1	
-61	758 405		BRACKET - Attitude hold (7B1774-1)	1	
-62	758 416		BRACKET - Relay box (7B1822)	1	
-63	488 888		SLEEVE - (MS20819-3D)	1	

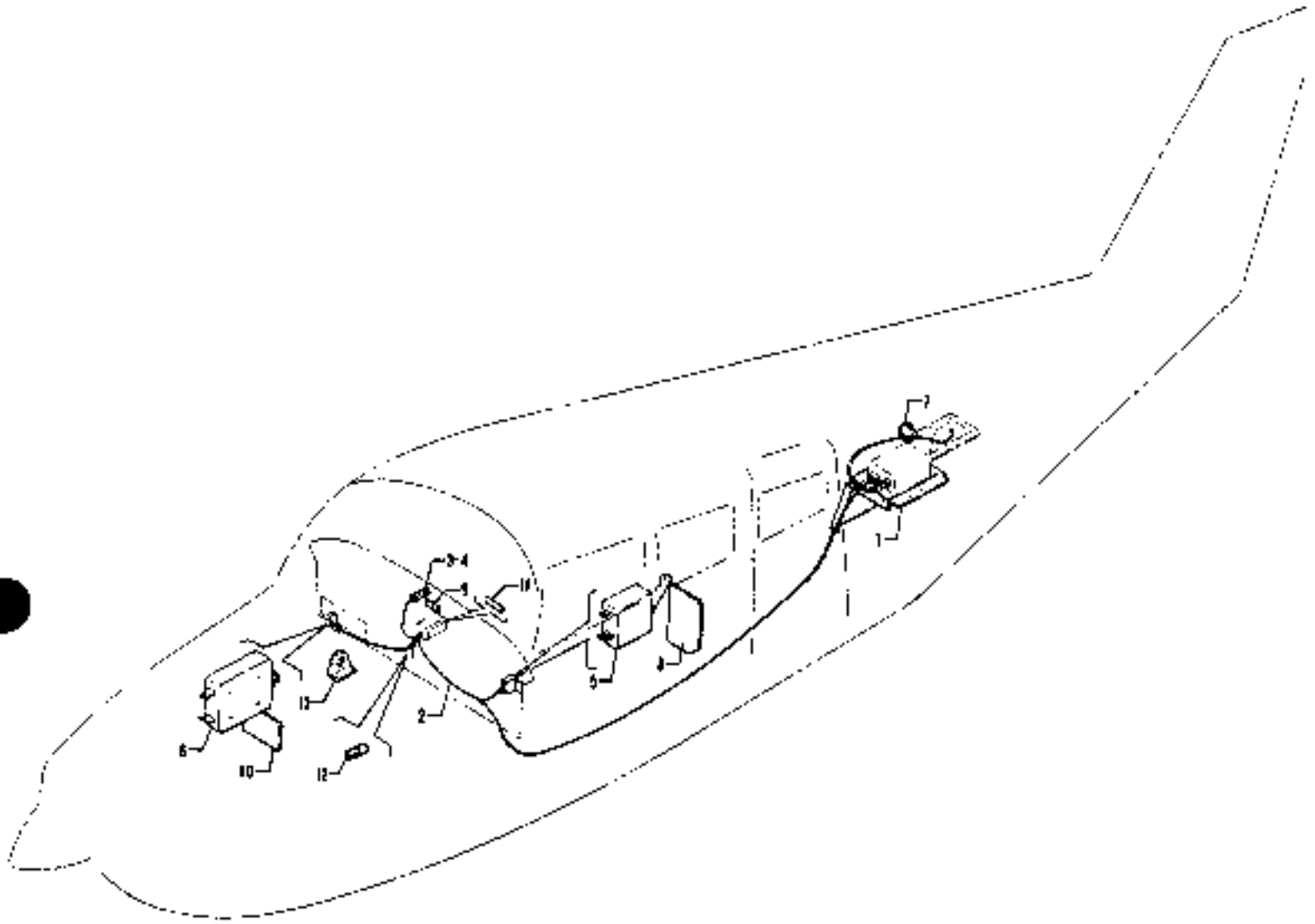

Figure 120 Radar Altimeter Installation
(PA-32-260 - Serial Nos. 32-7600001 and up)
(PA-32-300 - Serial Nos. 32-7640001 and up)
(PA-32R-300 - Serial Nos. 32R-7680001 and up)

CODE EXPLANATIONS FOR FIGURE 120

A - Used on PA-32-260 with serial numbers 32-7600001 and up, PA-32-300 with serial numbers 32-7640001 and up, and PA-32R-300.
B - Used if Air Conditioning is installed.
W - These parts must be ordered from Service Spares Department, Piper Aircraft, Lock Haven, Penna.

PIPER PARTS CATALOG

Figure and Index Number	Part Number	Code	NOMENCLATURE	No Req.	SERIAL NUMBERS AFFECTED
120-	37693		DRAWING - Radar Altimeter Installation		
-1	37693-04		SUPPORT - Radar altimeter transmitter	1	
-2	37694-02		HARNESS ASSEMBLY - Radar altimeter	1	
-3	761 198		* LAMP ASSEMBLY - (136-0020-001)	1	
-4	472 054	W	* LAMP - (PS10008-330)	1	
-5	587 923		* SWITCH - (JMT 123)	1	
-6	454 706		CIRCUIT BREAKER - (PS50120-1-2) 5 amp. ETA Products	1	
	454 668		CIRCUIT BREAKER - (PS50120-3-8) 5 amp. Wood Electric Corp	1	
-7	63166-12		MOULDING	1	
-8	69669-87		PLACARD - Radar altimeter "ON-OFF"	1	
-9	69669-96		PLACARD - Radar altimeter "OFF" for "TAKE-OFF"	1	
-10	69669-96		PLACARD - Radar altimeter	1	
-11	69669-134	B	PLACARD - Warning	1	
-12	472 054	W	LAMP - (PS10008-330)	1	
-13	35672-02		BRACKET - Horn	1	

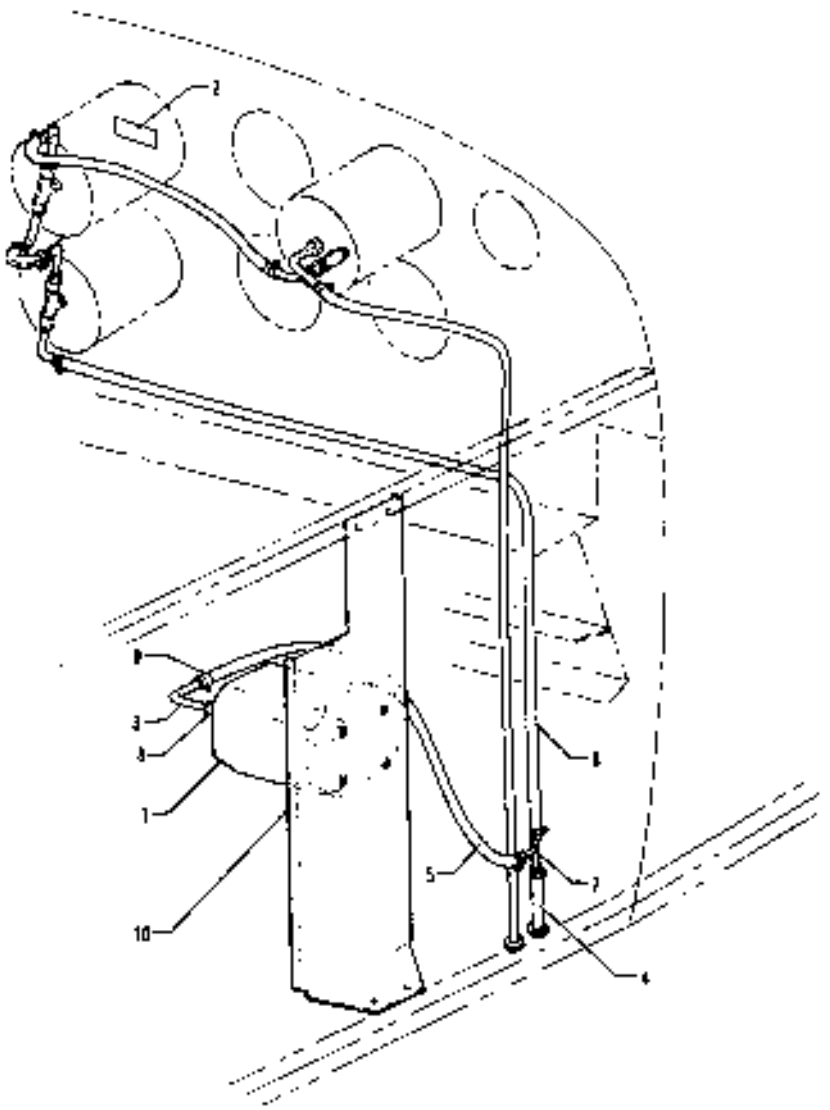

Figure 121 Encoder Installation (Narco AR 500 & United - 6126-P3)
(PA-32-260 - Serial Nos 32-7700001 and up)
(PA-32-300 - Serial Nos 32-7740001 and up)
(PA-32R-300 - Serial Nos 32R-7780001 and up)

CODE EXPLANATIONS FOR FIGURE 121

A Used on PA-32-260 with serial numbers 32-7700001 and up, PA-32-300 with serial numbers 32-7740001 and up, and PA-32R-300 with serial numbers 32R-7780001 and up
B Used on PA-32-260 and PA-32-300 only
C - Used on PA-32R-300 only
D - Used on PA-32-300 only
W - These parts must be ordered from Service Spares Department, Piper Aircraft, Lock Haven, Penna

PIPER PARTS CATALOG

Figure and Index Number	Part Number	Code	NOMENCLATURE	No Req	SERIAL NUMBERS AFFECTED
121-	69875		DRAWING - Encoder Installation (Narco AR 500 & United 5125-P3)		
-1	586 605		ALTITUDE REPORTER - Narco (PS50040-30-2)	1	
	697 426	D	ALTITUDE REPORTER - United (PS50040-30-4)	1	32-7940114 and up
-2	35669-154		PLACARD - Altitude reporter installed	1	
-3	63211-00	B	TUBE ASSEMBLY - Altitude reporter	1	
	67700-160	C	TUBE ASSEMBLY - Altitude reporter	1	
-4	63913-34		HOSE	1	
-5	63913-37		HOSE	1	
-6	63913-115		HOSE	1	
-7	68183-07		TEE	1	
-8	476 647	B,W	UNION - (AN816-3D)	1	
	456 893	C,W	ELBOW - (AN822-3D)	12	
-9	554 861	W	CLAMP - (SAE TY F 4)	4	
-10	69874-05	R	BRACKET ASSEMBLY - Mounting	1	

When ordering, always specify Part Number, Description and Serial Number of Aircraft

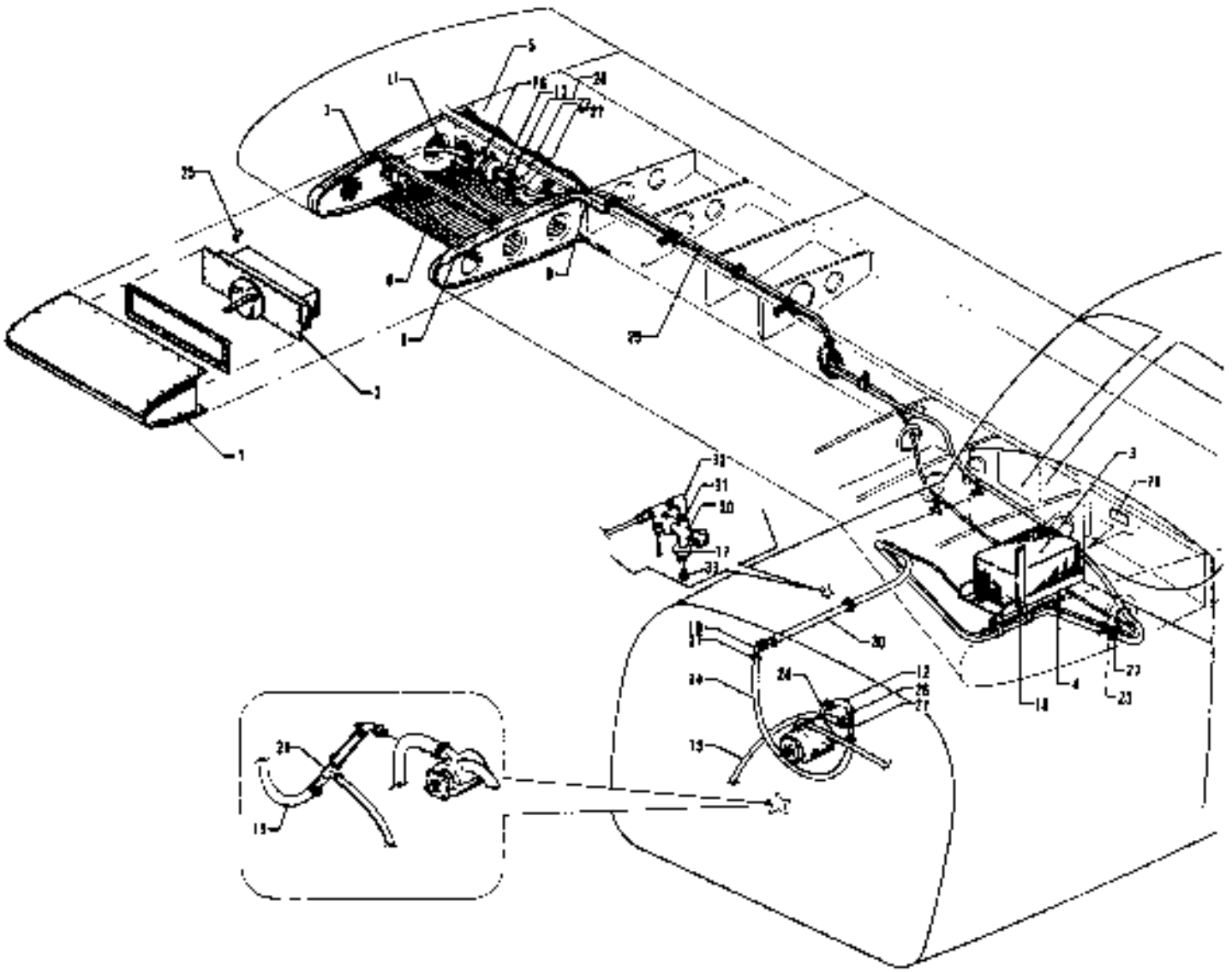

Figure 122. Radar System Installation
(Serial Nos. 32-7940063 and up)

CODE EXPLANTION FOR FIGURE 122

A - Part of 767-385 Inline Air Filter Replacement Kit to replace 460-866 (1J4-6) Filter.

PIPER PARTS CATALOG

Figure and Index Number	Part Number	Code	NOMENCLATURE	No. Req.	SERIAL NUMBERS AFFECTED
122 -	36885		DRAWING - Radar asystem Installation		
- 1	36887-13		RADOME ASSEMBLY	1	
- 2	597-206		ANTENNA ASSEMBLY - R/T (MI585255-1)	1	
- 3	597 208		INDICATOR - Radar (MI585256-1)	1	
- 4	597 207		TRAY - MOUNTING (MI585260)	1	
- 5	36880-04		SKIN ASSEMNLY - Outboard, Wing top	1	
- 6	36880-05		SKIN ASSEMNLY - Outboard, Wing bottom	1	
- 7	36880-09		FILLER - Wing rib, Sta. 171.35	1	
- 8	36880-08		FILLER - Wing rib, Sta. 147.70	1	
- 9	36880-07		FILLER - Wing rib, Sta. 147.70, rear	1	
- 10	79009-00		SUPPORT - Mounting tray	1	
- 11	63913-84		Hose - Antenna to filter	1	
-12	63913-153		HOSE - Fitting to vacuum pump	1	
-13	63913-154		HOSE	1	
- 14	63913-178		HOSE - Firewall to vacuum pump	1	
- 15	63913-185		HOSE - Fitting	1	
- 16	754-929	A	FILTER - Inline Air Filter (2J4-6)	1	
- 17	587 990		SWITCH - Pressure (M-4006-4)	1	
- 18	35669-25		PLACARD - Radar	1	
- 19	558 778		FITTING -Bulkhead (1K54-6-6)	1	
- 20	455 405		CROSS - (AN916-1D)	1	
- 21	36886-02		FITTING - Tee	1	
- 22	36886-08		FITTING - Tube	1	
- 23	36886-09		FITTING - Tube	1	
- 24	560 775		ELBOW - (1K8-6-10)	1	
- 25	560 774		ELBOW - (1k9-6-10)	1	
- 26	454 837		CLAMP - (SAE TY A-7/8)	2	
- 27	554 888		CLAMP - (SAE TY F-6)	7	
- 28	554 659		CLAMP - (SAE TY F-8)	4	
- 29	36885-05		TUBE	1	
- 30	36885-04		TUBE	1	
- 31	476 643		NIPPLE - (AN911-1D)	1	
- 32	458 904		ELBOW - (AN914-1D)	1	
- 33	581 312		PLUG - (AN913-1D)	1	

When ordering, always specify Part Number, Description, and Serial Number of Aircraft

CODE EXPLANATIONS FOR RADIO INSTALLATION DRAWINGS

A - Used in conjunction with Piper Marker Beacon
B - Used on PA-32-260 with serial numbers 32-1 to 32-1110 inclusive, and PA-32-300 with serial numbers 32-40000 to 32-40565 inclusive
C - Used on PA-32-260 with serial numbers 32-1111 and up, and PA-32-300 with serial numbers 32-40566 and up
D - Used on PA-32-260 with serial numbers 32-1111 to 32-1320 inclusive, and PA-32-300 with serial numbers 32-40566 to 32-41018 inclusive
E - Used on PA-32-260 with serial numbers 32-7100001 to 32-7300078 inclusive, and PA-32-300 with serial numbers 32-7140001 to 32-7340201 inclusive
F - Used on PA-32-260 with serial numbers 32-7200001 and up, PA-32-300 with serial numbers 32-7240001 to 32-7840222 incl , and PA-32R-300
G - Used on PA-32-260 with serial numbers 32-1111 to 32-7400061 inclusive, and PA-32-300 with serial numbers 32-40566 to 32-7440182 inclusive
H - Used on PA-32-260 with serial numbers 32-7200001 to 32-7400061 inclusive, and PA-32-300 with serial numbers 32-7240001 to 32-7440182 inclusive
J - Used on PA-32-260 with serial numbers 32-1111 and up, PA-32-300 with serial numbers 32-40566 and up, and PA-32R-300
K - Used on PA-32-260 with serial numbers 32-7300001 and up, PA-32-300 with serial numbers 32-7340001 and up, and PA-32R-300
L - Used on PA-32-260 with serial numbers 32-7200001 to 32-7200037 inclusive, and PA-32-300 with serial numbers 32-7240001 to 32-7240118 inclusive
M - Used on PA-32-260 with serial numbers 32-7200038 and up, PA-32-300 with serial numbers 32-7240120 and up, and PA-32R-300
N - Used on PA-32-260 with serial numbers 32-7200026 to 32-7400061 inclusive, and PA-32-300 with serial numbers 32-7240084 to 32-7440182 inclusive
O - Used on PA-32-260 with serial numbers 32-7200023 and up, PA-32-300 with serial numbers 32-7240086 and up, and PA-32R-300
P - Used on PA-32-260 with serial numbers 32-7400001 and up, and PA-32-300 with serial numbers 32-7440001 to 32-7840222 incl
Q - Used on PA-32-260 with serial numbers 32-7500001 and up, PA-32-300 with serial numbers 32-7640001 and up, and PA-32R-300
R - Used on PA-32-260 with serial numbers 32-7500001 and up, and PA-32-300 with serial numbers 32-7540001 and up
S - Used on PA-32-260 with serial numbers 32-7400001 to 32-7700023 inclusive, PA-32-300 with serial numbers 32-7640001 to 32-7740113 inclusive, and PA-32R-300 with serial numbers 32R-7680001 to 32R-7780549 inclusive
T - Used on PA-32R-300 only
U - Used on PA-32-260 with serial numbers 32-7600001 and up, and PA-32-300 with serial numbers 32-7640001 to 32-7840222 incl
V - Used on PA-32-260 with serial numbers 32-7200001 to 32-7500053 inclusive, and PA-32-300 with serial numbers 32-7240001 to 32-7540198 inclusive
X - Used on PA-32-260 with serial numbers 32-7600001 and up, PA-32-300 with serial numbers 32-7640001 to 32-7840222 incl , and PA-32R-300
Y - Used on PA-32-260 with serial numbers 32-7700001 and up, and PA-32-300 with serial numbers 32-7740001 and up
Z - Used on PA-32-260 with serial numbers 32-7700001 and up, PA-32-300 with serial numbers 32-7740001 and up, and PA-32R-300 with serial numbers 32R-7780001 and up
AA - Used on PA-32-260 with serial numbers 32-7300001 to 32-7700023 inclusive, PA-32-300 with serial numbers 32-7340001 to 32-7740113 inclusive, and PA-32R-300 with serial numbers 32R-7680001 to 32R-7780549 inclusive
AB - Used on PA-32-260 with serial numbers 32-7600001 and up, PA-32-300 with serial numbers 32-7640001 and up, and PA-32R-300 with serial numbers 32R-7880001 and up
AC - Used on PA-32-260 with serial numbers 32-7400001 to 32-7700023 inclusive, and PA-32-300 with serial numbers 32-7440001 to 32-7740113 inclusive
AD - Used on PA-32-260 with serial numbers 32-7400001 to 32-7700023 inclusive, and PA-32-300 with serial numbers 32-7640001 to 32-7740113 inclusive
AE - Used on PA-32-260 with serial numbers 32-7600001 to 32-7700023 inclusive, and PA-32-300 with serial numbers 32-7640001 to 32-7740113 inclusive
AF - Used on PA-32-260 with serial numbers 32-7800001 and up, and PA-32-300 with serial numbers 32-7880001 and up
AG - Used on PA-32-260 with serial numbers 32-7500001 and up, and PA-32-300 with serial numbers 32-7540001 to 32-7840222 incl
AH - Used on PA-32-300 only

PIPER PARTS CATALOG

Figure and Index Number	Part Number	Code	NOMENCLATURE	No. Req.	SERIAL NUMBERS AFFECTED
	68864	B	DRAWING - Antenna Systems Installation		
	69389	J	DRAWING - Antenna Systems Installation		
	68865	B	DRAWING - Radio Systems Installation		
	69390	J	DRAWING - Radio Systems Installation		
	68844		DRAWING - Narco UGR-1A Glide Slope Installation		
	68867	B	DRAWING - Narco ADF-31 Radio Installation		
	69384	G	DRAWING - Narco ADF-31A Radio Installation		
	68856	B	DRAWING - Bendix ADF-T12-B Radio Installation		
	69385	G	DRAWING - Bendix ADF-T12-C or D Radio Installation		
	68859	A	DRAWING - Narco Mark 12 Radio Installation		
	68860		DRAWING - King KX-150A Radio Installation		
	99608	E	DRAWING - King KX-170 Radio Installation		
	99666	V	DRAWING - King KN60C DME Radio Installation		
	68862	B	DRAWING - Narco UDI-3 DME Installation		
	69386	G	DRAWING - Narco UDI-4 DME Radio Installation		
	68869	B	DRAWING - Narco Mark 12 Radio Installation		
	69382	C	DRAWING - Narco Mark 12 and Mark 16 Radio Installation		
	68842	B	DRAWING - Narco Mark VI Radio Installation		
	69383	D	DRAWING - Narco Mark VIII Radio Installation		
	69387	G	DRAWING - Transponder AT5-A Installation		
	99665	H	DRAWING - Transponder Installation, I F D Sierlight		
	69641	H	DRAWING - Narco COMM-NAV 10/11/12 and Glide Slope Radio Installation		
	99637	F	DRAWING - King KX-170A/KX-170B or KX-175B and Glide Slope Radio Installation		
	69640	L	DRAWING - Narco AT50 Transponder Installation		
	99699	M	DRAWING - Narco AT50/AT50A Transponder Installation		
	99645	N	DRAWING - IDF Skyline 300 Transponder Installation		
	99644	O	DRAWING - King KR 86 Radio Installation		
	79024	P	DRAWING - King KX-175B, KN73, KN77 and KNI520 Radio Installation		
	79304	AC	DRAWING - Narco CP258/125 and MBT-12R Audio and Marker Beacon Installation		
	37984	AB	DRAWING - Narco CP-135/135M Radio Installation		
	79001	K	DRAWING - King KMA-20 Audio Marker and Beacon Installation		
	79308	S	DRAWING - Narco COMM 10/110, 11/111, Nav 11/111, 12/112 Radio Installation		
	67988	AB	DRAWING - Narco COMM 120/111, NAV 121/122/122A, UGR-2A Radio Installation		
	69657	AA	DRAWING - King KT-76/78 Transponder Installation		
	69935	AB	DRAWING - King KT76A/78A Transponder Installation		
	68861	AD	DRAWING - R NAV, CLC-60A, Narco Radio Installation		
	79069	AG	DRAWING - King KN-74 Area NAV Radio Installation		
	69860	Q	DRAWING - Narco ADF-140/141 Single Radio Installation		
	68870	R	DRAWING - Narco ADF-140 Dual Radio Installation		
	79061	Q	DRAWING - King KR-86 Single Radio Installation		
	79064	Q	DRAWING - King KN-65/65A DME Radio Installation		
	79075	Q	DRAWING - King KR-85, KR-86 Dual Radio Installation		
	79491	Q	DRAWING - Narco DME-190/190 TSO Installation		
	38132	T	DRAWING - Narco CP258/125 and MBJ-12-R System Installation		32R-7680001 to 32R-7780549 incl
	38134	T	DRAWING - King KX-175B, KN73, KN77 and KN520 Radio Installation		
	38135	T	DRAWING - King KN74 Area Nav System Installation		
	38130	T	DRAWING - Narco CLC-60A R Nav Radio Installation		32R-7680001 to 32R-7780549 incl
	38131	T	DRAWING - Narco ADF-140/141 Dual Radio Installation		

When ordering, always specify Part Number, Description and Serial Number of Aircraft

Figure and Index Number	Part Number	Code	NOMENCLTURE	No. Req.	SERIAL NUMBERS AFFECTED
	69916	U	DRAWING - King KX-170B(E) COMM Glide Slope and NSD-360 Radio Installation		
	69918	U	DRAWING - Narco CLC-80A/NSD-360, R Nav Radio Installation		
	69919	AE	DRAWING - Nav 14/114, OC110, NSD-360 Radio Installation		
	38242	T	DRAWING - King KX-170B/(E) COMM G S and NSD-360 Radio Installation		
	38243	T	DRAWING - Narco CLC-80A/NSD-360 R Nav Radio Installation		
	38244	T	DRAWING - Nav 14/114, OC110, NSD-360 Radio Installation		32R-7680001 to 32R-7780549 incl
	37866	AB	DRAWING - Nav 124A, NSD-360A Radio Installation		
	69922	X	DRAWING - King KN-61 DME Radio Installation		
	69934	Y	DRAWING - Collins Dual VHF-251 /with DME Switching, Dual Omni and Glide Slope		
	38257	T	DRAWING - Collins Dual VHF-250/251 with DME Swithing, Dual Omni, Glide Slope and H S I		32R-7790001 and up
	69928	Z	DRAWING - Collins ACR-650 ADF Single Radio Installation		
	69932	Z	DRAWING - Narco DME-195 Radio Installation		
	69929	Z	DRAWING - Collins TDR-950 Transponder Installation with provisions for Encoding Altimeter and Attitude Reporter		
	69930	Z	DRAWING - Collins AMR-350 Audio and Marker Beacon System Installation		
	37987	AF	DRAWING - Narco CLC-80A/ID-124, R Nav DME-190 Radio Installation		
	37988	T	DRAWING - Narco CLC-80A/ID-124, R Nav DME-190 Radio Installation		32R-7880001 and up
	37991	AF	DRAWING - Narco CLC-80A/ID-124, DME-195 Radio Installation		
	37992	T	DRAWING - Narco CLC-80A/ID-124, DME-195 Radio Installation		32R-7880001 and up
	69978	AF	DRAWING - Narco CLC-80A/NSD-360A, DME 195 Radio Installation		
	38259	T	DRAWING - Narco CLC-80A/NSD-360A, DME-195 Radio Installation		32R-7880001 and up
	69943	AB	DRAWING - Narco DME-195 Radio Installation		
	69992		DRAWING - King Single ADF/HF Compatibility Installation		
	36912	AH	DRAWING - King KX-170B/175B, KI- 204/208/209 KN-75 NAV-COMM and G/S Installation (with King KFC-200 Provisions)		32-7940001 and up
	36913	AH	DRAWING - King KX-170B/175B, KI-203/208 KN-72/75 NAV-COMM, Glide Slope and NSD-360 Installation		32-7940001 and up
	36914	AH	DRAWING - King KX-170B/175B, KI-203/208, KN-72/75 NAV-COMM, Glide Slope and H S I Installation (with KFC-200 Provisions)		32-7940001 and up
	36915	AH	DRAWING - King KX-170B/175B, KI-203/208/209, KN-65A/74/75 Area Nav System Installation (with KFC-200 Provisions)		32-7940001 and up
	36920	AH	DRAWING - Collins DCE-400 Distance Computing Equipment		32-7940001 and up

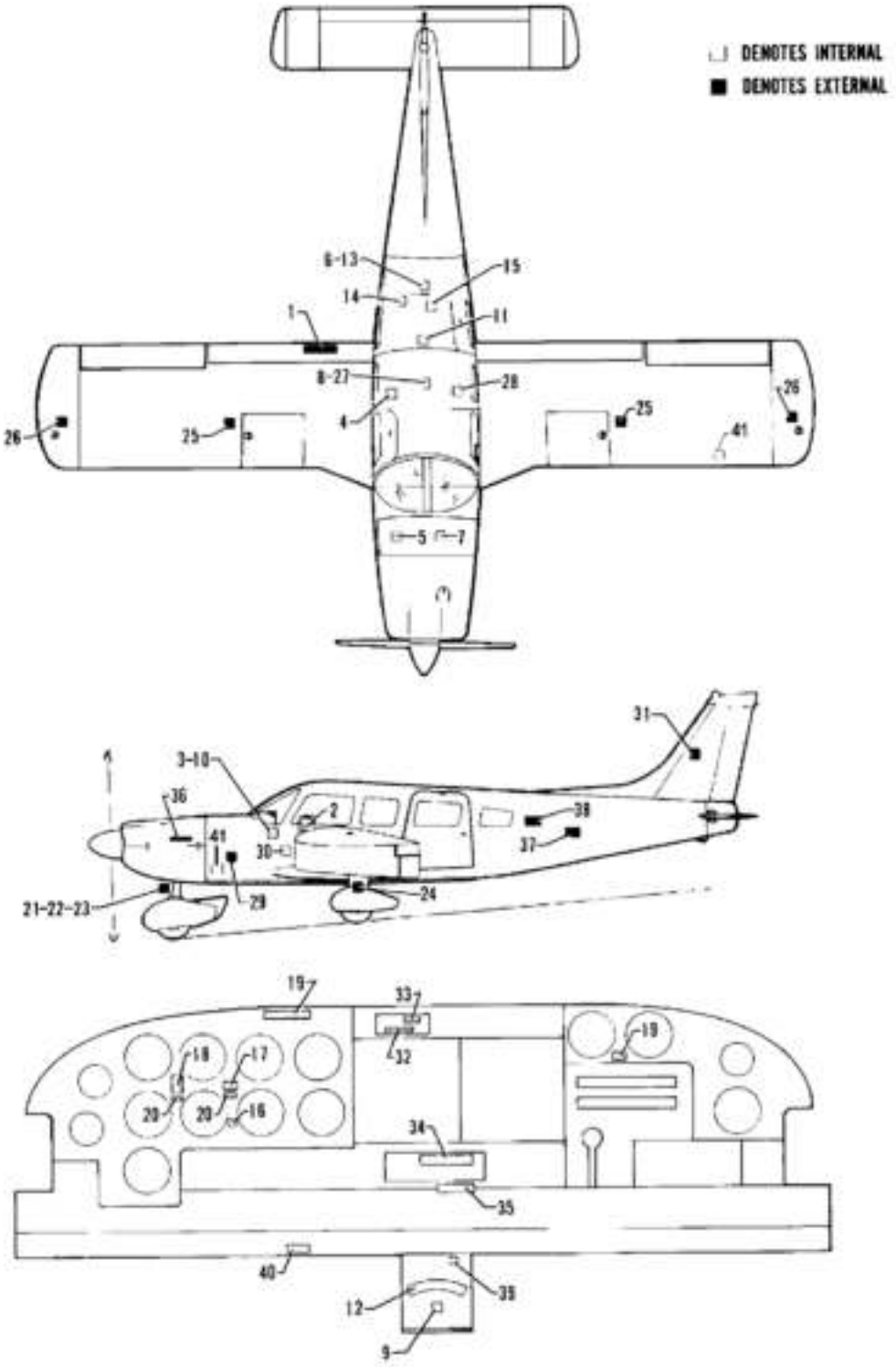

Figure 123. Placards and Exterior Stencils
(PA-32-260 - Serial Nos. 32-1 to 32-1110 incl.)
(PA-32-300 - Serial Nos. 32-40000 to 32-40565 incl.)

CODE EXPLANATIONS FOR FIGURE 48

A - Used on PA-32-260 with serial numbers 32-1 to 32-1110 incl. and PA-32-300 with serial numbers 32-40000 to 32-40565 incl.
B - Used on PA-32-260 only.
C - Used on PA-32-260 with serial numbers 32-876 to 32-1110 incl. and PA-32-300 with serial numbers 32-40000 to 32-40565 incl.
D - Order P/N 69653-00 if Fuel Selector Control Modification Kit has been installed per Service Bulletin 376.
E - Used on PA-32-260 with serial numbers 32-376 to 32-1110 incl. and PA-32-300 with serial numbers 3240000 to 32-40565 incl.
F - Used on PA-32-300 only.
G - Used if 3" gyros are installed.
H - Use on PA-32S-300 Seaplane Model only.
J - Used on AutoControl with "O" heading only.
K - Used on AutoControl with course selector only.
L - Reference latest revision to Piper Service Letter 793.

PIPER PARTS CATALOG

Figure and Index Number	Part Number	Code	NOMENCLATURE	No. Req.	SERIAL NUMBERS AFFECTED
123-1	35664-02	L	PLACARD - Flap warning	1	
-2	757 314		PLACARD - Storm window	1	
-3	65356-00		PLACARD - Door holder	1	
-4	68555-02		PLACARD - Door latch, forward	1	
-5	68803-00		PLACARD - Light switch	1	
-6	69148-00		PLACARD - Baggage limitations	1	
-7	69147-00		PLACARD - Baggage limitations	1	
-8	99121-00		PLACARD ASSEMBLY - Alternate static correlation	1	
-9	69192-00		PLACARD - Fuel, passenger operating limitations	1	
-10	69097-00		PLACARD - Operating limitations	1	
-11	67786-00		PLACARD - Stabilator trim	1	
-12	65397-00	B,D	PLACARD - Fuel selector	1	32-1 to 32-875 incl.
	69086-00	C,D	PLACARD - Fuel selector	1	
-13	66787-00		PLACARD - Cabin bulkhead	1	
-14	69669-110		PLACARD - Seat release	4	
-15	99435-00		PLACARD - 7th seat limitations	1	
-16	62897-00		PLACARD - Stall warning	1	
-17	62347-02	B	PLACARD - Landing checklist	1	32-1 to 32-375
	69164-03	E	PLACARD - Landing checklist	1	
-18	68494-00	B	PLACARD - Take-off checklist	1	
	69146-00	F	PLACARD - Take-off checklist	1	
	69007-00	B,G	PLACARD - Take-off checklist	1	
	69149-00	F,G	PLACARD - Take-off checklist	1	
-19	69084-00	B,F	PLACARD - Rough air or maneuvering	1	
	69156-00	H	PLACARD - Rough air or maneuvering	1	
-20	69180-00	H	PLACARD - Seaplane, checklist addition	2	
-21	65368-00		PLACARD - Oleo service instructions (decal) nose	1	
-22	35669-06		PLACARD - Turn limit	1	
-23	35669-05		PLACARD - Turn limit center mark	1	
-24	65369-00		PLACARD - Oleo service instructions (decal) main	2	
-25	99367-00		PLACARD - Main fuel tank	2	
-26	99368-00		PLACARD - Tip fuel tank	2	
-27	35669-27		PLACARD - Flap lever	1	
-28	66934-00		PLACARD - Control lock	1	
-29	69669-173		PLACARD - External power	1	
-30	69669-15		PLACARD - Warning (exposed switch)	1	
	69669-66		PLACARD - Warning (recessed switch)	1	
-31	35669-105		PLACARD - ELT location	1	
-32	68821-00	B	PLACARD - AutoFlite console	1	32-451 to 32-558 incl.
-33	68825-00		PLACARD - AutoFlite trim (without tracker)	1	
	66800-00		PLACARD - AutoFlite trim (with tracker)	1	
-34	62163-00	J	PLACARD - AutoControl II Console	1	
	65524-00	K	PLACARD - AutoControl II Console	1	
-35	62170-00	B	PLACARD - AutoControl II Console	1	32-1 to 32-558 incl.
-36	68006-00		NAMEPLATE - Six	2	
	63934-00		NAMEPLATE - Cherokee	2	
-37	22859-00		STENCIL - Piper	2	
-38	22418-02	N	NUMERAL - "2"	2	
	22418-04		NUMERAL - "0"	2	
	63968-10	M	NUMERAL - "3"	2	
	63968-05	N	NUMERAL - "6"	2	
-39	65219-00		PLACARD - Rudder trim	1	
-40	67768-00		PLACARD - Alternate air	1	
-41	450 741		DECAL - Lift detector (C52207-4)	1	

When ordering, always specify Part Number, Description, and Serial Number of Aircraft

3C20 THRU 3C24

INTENTIONALLY LEFT BLANK

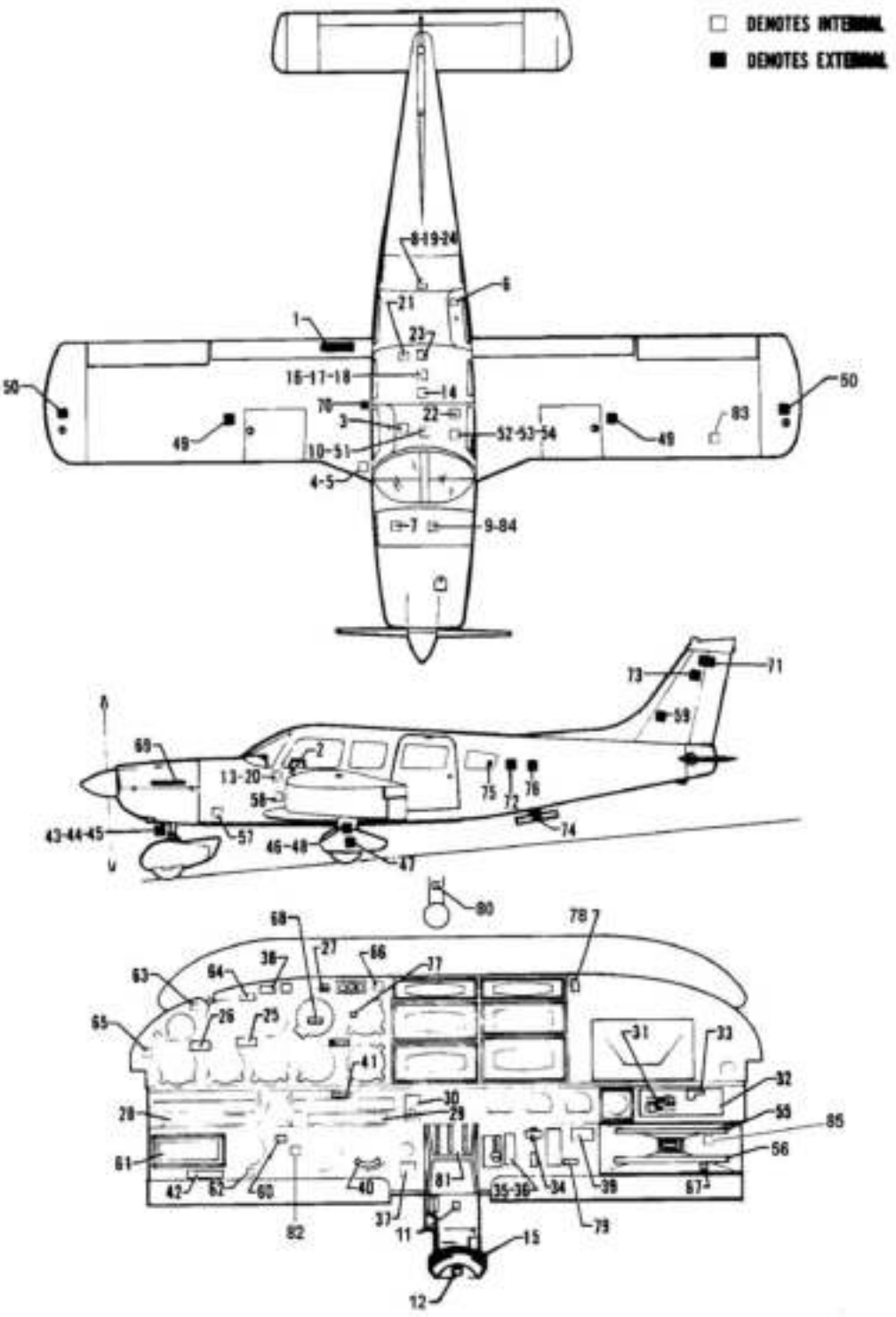

Figure 124. Placards and Exterior Stencils
(PA-32-260 - Serial Nos. 32-1111 and up)
(PA-32-300 - Serial Nos. 32-40566 and up)
(PA-32R-300 - Serial Nos. 32R-7680001 and up)

CODE EXPLANATIONS FOR FIGURE 124

A - Used on PA-32-260 with serial numbers 32-1111 and up, PA-32-300 with serial numbers 32-40566 and up, and PA-32R-300 with serial numbers 32R-7680001 and up
B - Used on PA-32-260 with serial numbers 32-1111 to 32-7200055 incl., and PA-32-300 with serial numbers 32-40566 to 32-7240147 incl
C - Used on PA-32R-300 with serial numbers 32R-7680001 to 32R-7680072, 32R-7680074 to 32R-7680155, 32R-7680157 to 32R-7680538 incl
D - Used on PA-32R-300 with serial numbers 32R-7680073, 32R-7680156, 32R-7780001 and up
E - Used on PA-32-260 with serial numbers 32-7800002 and up, PA-32-300 with serial numbers 32-7640030 and up, and PA-32R-300 with serial numbers 32R-7680014 and up
F - Used on PA-32-260 with serial numbers 32-7300001 and up, PA-32-300 with serial numbers 32-7340001 and up, and PA-32R-300 with serial numbers 32R-7680001 and up
G - Used on PA-32-260 with serial numbers 32-1111 to 32-7700023 incl., PA-32-300 with serial numbers 32-40566 to 32-7740113 incl., and PA-32R-300 with serial numbers 32R-7680001 to 32R-7780649 incl
H - Used on PA-32-260 with serial numbers 32-7800001 and up, PA-32-300 with serial numbers 32-7840001 and up, and PA-32R-300 with serial numbers 32R-7680001 and up
J - Used on PA-32-260 with serial numbers 32-1111 to 32-7600033 incl., and PA-32-300 with serial numbers 32-40566 to 32-7640142 incl
K - Used on PA-32-260 with serial numbers 32-7700001 and up, and PA-32-300 with serial numbers 32-7740001 and up
L - Used on PA-32R-300 only
M - Used on PA-32-300 only
N - Used on PA-32-260 only
O - Used on PA-32-260 with serial numbers 32-7300037 and up, PA-32-300 with serial numbers 32-7340082 and up, and PA-32R-300 with serial numbers 32R-7680001 and up
P - Used on PA-32-260 with serial numbers 32-1111 to 32-7300036 incl., and PA-32-300 with serial numbers 32-40566 to 32-7340081 incl
Q - Order part for PA-32-260 with serial numbers 32-7300037 and up, PA-32-300 with serial numbers 32-7340082 to 32-7840222 incl if Fuel Selector Control Modification Kit has been installed per Service Bulletin 378
R - Used on PA-32-260 with serial numbers 32-7300037 and up, and PA-32-300 with serial numbers 32-7340082 to 32-7840222 incl
S - Used on PA-32-300 with serial numbers 32-7940001 and up, and PA-32R-300 with serial numbers 32R-7680001 and up
T - Used on PA-32-260 with serial numbers 32-1111 to 32-7700011 incl., PA-32-300 with serial numbers 32-40566 to 32-7740042 incl., and PA-32R-300 with serial numbers 32R-7680001 to 32R-7780188 incl
U - Used if seat back assembly incorporates handles for seat back and seat track release
V - Used on PA-32-260 with serial numbers 32-1111 and up, PA-32-300 with serial numbers 32-40566 to 32-7840222 incl., and PA-32R-300 with serial numbers 32R-7680001 to 32R-7780188 incl
W - These parts must be ordered from Service Spares Department, Piper Aircraft, Lock Haven, Penna
X - Used on PA-32-260 with serial numbers 32-1111 to 32-7400061 incl., and PA-32-300 with serial numbers 32-40566 to 32-7440182 incl
Y - Used on PA-32S-300 Seaplane Model only
Z - Used on PA-32-260 with serial numbers 32-7500001 to 32-7600033 incl., and PA-32-300 with serial numbers 32-7540001 to 32-7640142 incl
AA - Used on PA-32-260 with serial numbers 32-7600001 and up and PA-32-300 with serial numbers 32-7540001 and up
AB - Used on PA-32-260 with serial numbers 32-7500001 and up, PA-32-300 with serial numbers 32-7540001 and up, and PA-32R-300 with serial numbers 32R-7680001 and up
AC - Used on PA-32-260 with serial numbers 32-1111 to 32-7100038 incl., and PA-32-300 with serial numbers 32-40566 to 32-7140066 incl
AD - Used on PA-32-260 with serial numbers 32-7200001 to 32-7600033 incl., and PA-32-300 with serial numbers 32-7240001 to 32-7640142 incl
AE - Used on PA-32-300 with serial numbers 32-7240056 and up, and PA-32R-300 with serial numbers 32R-7680001 and up
AF - Used if air conditioning is installed
AG - Used on PA-32-300 with serial numbers 32-7340043 to 32-7840025 incl., and PA-32R-300 with serial numbers 32R-7680001 to 32R-7680031 incl. Order part for PA-32-300 with serial numbers 32-7840026 and up, and PA-32R-300 with serial numbers 32R-7680032 and up if the four position fan switch has been replaced with a three position fan switch
AH - Used on PA-32-300 with serial numbers 32-7840026 and up, and PA-32R-300 with serial numbers 32R-7680032 and up
AJ - Used on PA-32-300 with serial numbers 32-40853, 32-7240056 to 32-7340042 incl. Order part for PA-32-300 with serial numbers 32-7340043 to 32-7840025 incl., PA-32R-300 with serial numbers 32R-7680001 to 32R-7680031 incl if Air Conditioning Control System Modification Kit has been installed
AK - Used if Fresh Air Blower is installed
AL - Used on PA-32-260 with serial numbers 32-7400001 to 32-7700023 incl., PA-32-300 with serial numbers 32-7440001 to 32-7840025 incl., and PA-32R-300 with serial numbers 32R-7680001 to 32R-7680031 incl. Order part for PA-32-260 with serial numbers 32-7800001 and up, PA-32-300 with serial numbers 32-7840026 and up, and PA-32R-300 with serial numbers 32R-7680032 and up if the four position fan has been replaced with a three position fan switch

CODE EXPLANATIONS FOR FIGURE 124 (cont.)

AM - Used on PA-32-260 with serial numbers 32-7800001 and up, PA-32-300 with serial numbers 32-7840026 and up, and PA-32R-300 with serial numbers 32R-7880032 and up.
AN - Used on PA-32-260 with serial numbers 32-1111 to 32-7300076 incl., and PA-32-300 with serial numbers 32-40566 to 32-7340201 incl.
AO - Used on PA-32-260 with serial numbers 32-7400001 and up, PA-32-300 with serial numbers 32-7440001 and up, and PA-32R-300 with serial numbers 32R-7680001 and up.
AP - Used on aircraft that comply with German Government Requirements.
AR - Used on PA-32-260 with serial numbers 32-7200001 to 32-7700005 incl., and PA-32-300 with serial numbers 32-7240001 to 32-7740012 incl.
AS - Used if heavy duty wheels, brakes and tires are not installed.
AT - Used if heavy duty wheels, brakes and tires are installed.
AU - Used on PA-32-260 with serial numbers 32-7800001 and up, and PA-32-300 with serial numbers 32-7840001 and up.
AV - Used on PA-32-260 with serial numbers 32-1111 and up, and PA-32-300 with serial numbers 32-40566 to 32-7840222 incl.
AW- Used on PA-32-260 with serial numbers 32-7200001 to 32-7300076 incl., and PA-32-300 with serial numbers 32-7240001 to 32-7340201 incl.
AX - Used with Garrett Transmitter Assembly Part No. 761 967 (Model 627810-1) only.
AY - Used with Garrett Mfg. Ltd. Transmitter Assembly 761 939 (Model 627674-1) and C.C.C. Transmitter Assembly 596 644 (Model CIR-11-2) only.
AZ - Used on PA-32-260 with serial numbers 32-1111 to 32-1320 incl., and PA-32-300 with serial numbers 32-40566 to 32-41018 incl.
BA - Used on PA-32-260 with serial numbers 32-7100001 and up, PA-32-300 with serial numbers 32-7140001 and up, and PA-32R-300 with serial numbers 32R-7680001 and up.
BB - Used if AutoControl III or III B is installed.
BC - Used if AltiMatic III C is installed.
BD - Used on PA-32-260 with serial numbers 32-7600001 and up, PA-32-300 with serial numbers 32-7640001 and up, and PA-32R-300 with serial numbers 32-7680001 and up.
BE - Used on PA-32-260 with serial numbers 32-7700001 and up, PA-32-300 with serial numbers 32-7740001 and up, and PA-32R-300 with serial numbers 32R-7780001 and up.
BF - Used on PA-32-260 with serial numbers 32-1111 to 32-1250 incl., and PA-32-300 with serial numbers 32-40566 to 32-40800 incl.
BG - Used on PA-32-260 with serial numbers 32-1251 to 32-1320 incl., and PA-32-300 with serial numbers 32-40851 to 32-41018 incl.
BH - Used on PA-32-260 with serial numbers 32-7100001 to 32-7100038 incl., and PA-32-300 with serial numbers 32-7140001 to 32-7140086 incl.
BJ - Used on PA-32-260 with serial numbers 32-7200001 to 32-7200055 incl., and PA-32-300 with serial numbers 32-7240001 to 32-7240147 incl.
BK - Used on PA-32-260 with serial numbers 32-7300001 to 32-7300076 incl., and PA-32-300 with serial numbers 32-7340001 to 32-7340201 incl.
BL - Used on PA-32-300 with serial numbers 32-7940001 and up, and PA-32R-300 with serial numbers 32R-7680001 and up.
BM - Used on PA-32-260 with serial numbers 32-7700001 to 32-7700023 incl., PA-32-300 with serial numbers 32-7740001 to 32-7740113 incl., and PA-32R-300 with serial numbers 32R-7780001 to 32R-7780549 incl.
BN - Used on PA-32-260 with serial numbers 32-1251 to 32-7300076 incl., and PA-32-300 with serial numbers 32-40851 to 32-7340201 inclusive.
BO - Used on PA-32-260 with serial numbers 32-7800001 and up, PA-32-300 with serial numbers 32-7840001 to 32-7840222 incl., and PA-32R-300 with serial numbers 32R-7880001 and up.
BP - Used on PA-32-300 with serial numbers 32-7440001 and up, and PA-32R-300 with serial numbers 32R-7680001 and up.
BQ - Used with Garrett Transmitter Assembly Part No. 761 939 (Model 627674-1).
BR - Used on PA-32R-300 with serial numbers 32R-7680001 to 32R-7680072, 32R-7680074 to 32R-7680155, 32R-7680157 to 32R-7680538 incl., and PA-32-300 with serial numbers 32-7740001 and up.
BS - Used on PA-32-260 with serial numbers 32-7400001 to 32-7700023 incl., and PA-32-300 with serial numbers 32-7440001 to 32-7840083 incl., and PA-32-300 with serial numbers 32R-7680001 and up.
BT - Used on PA-32-260 with serial numbers 32-7800001 and up, and PA-32-300 with serial numbers 32-7840084 and up.
BU - Used on PA-32-260 with serial numbers 32-1111 to 32-7200055 incl., if constant speed propeller has been installed.
BW - Used on PA-32-260 with serial numbers 32-1 to 32-7800008 incl., PA-32-300 with serial numbers 32-40000 to 32-7840202 incl., and PA-32S-300 with serial numbers 32S-40000 to 32S-7240137 incl.
BX - Used if a push on-off pitch trim switch is installed.
BY - Used if a toggle pitch trim switch is installed.
BZ - Used if radar system is installed.

PIPER PARTS CATALOG

Figure and Index Number	Part Number	Code	NOMENCLATURE	No. Req.	SERIAL NUMBERS AFFECTED
124-1	35664-02		PLACARD - Flag warning	1	
-2	757 314	B	PLACARD - Storm window	1	
	96853-00	C	PLACARD - Storm window	1	
	69669-141	D	PLACARD - Storm window	1	
-3	69555-05		PLACARD - Door latch, forward	1	
-4	69669-117	E	PLACARD - Open	1	
-5	69669-118	E	PLACARD - Latch	1	
-6	69555-05	F	PLACARD - Door latch, aft	1	
-7	68803-00	G	PLACARD - Light switch	1	
	35669-18	H	PLACARD - Baggage light	1	
-8	96272-00		PLACARD - Baggage limitations	1	
-9	69669-148		PLACARD - Baggage limitations	1	
-10	99121-00		PLACARD ASSEMBLY - Alternate static correlation	1	
-11	69363-00		PLACARD - Rudder trim	1	
12	88192-00		PLACARD - Fuel, passenger operating limitation	1	
-13	69582-00	J	PLACARD - Flight operation limitations	1	
	69669-146	N	PLACARD - Flight operation limitations	1	32-7700001 and up
	69669-88	BR	PLACARD - Flight operation limitations	1	
	69669-146	D	PLACARD - Flight operation limitations	1	
-14	67786-00		PLACARD - Stabilator trim	1	
-15	69088-00	P,Q	PLACARD - Fuel selector	1	
	69653-00	R	PLACARD - Fuel selector	1	
	69669-87	S	PLACARD - Fuel selector	1	
-16	69669-84	L	PLACARD - Gear override latch	1	
-17	67702-00	L	PLACARD - Emergency gear lever	1	
-18	69669-85	L	PLACARD - Override instructions	1	
-19	66787-00		PLACARD - Cabin bulkhead	1	
-20	69669-184	H	PLACARD - Dimmer	1	
-21	69669-110	T	PLACARD - Seat release	4	
-22	69669-13	U	PLACARD - Seat back release, left	1	
	69669-14	U	PLACARD - Seat back release, right	1	
-23	99436-00	V	PLACARD - 7th seat limitations	1	
-24	35669-104	BL	PLACARD - Table stowage	1	
-25	69353-00	X	PLACARD - Maneuvering speed, mph	1	
	69664-00	X	PLACARD - Maneuvering speed, knots	1	
	69166-00	Y	PLACARD - Rough air or maneuvering speed	1	32S-40566 to 32S-7240147 incl
	69353-00	Z	PLACARD - Maneuvering speed, mph	1	
	69664-00	Z	PLACARD - Maneuvering speed, knots	1	
	69669-137	K	PLACARD - Maneuvering speed, knots	1	
	69669-89	C	PLACARD - Rough air or maneuvering, mph	-	
	69669-37	C	PLACARD - Rough air or maneuvering, knots	1	
	69669-136	D	PLACARD - Maneuvering speed, knots	1	
-26	69354-00	X	PLACARD - Crosswind component, mph	1	
	69665-00	X	PLACARD - Crosswind component, knots	1	
	69354-00	Z	PLACARD - Crosswind component, mph	1	
	69665-00	AA	PLACARD - Crosswind component, knots	1	
	69669-72	C	PLACARD - Crosswind component, mph	1	
	69669-73	D	PLACARD - Crosswind component, knots	1	
-27	69669-39	AB	PLACARD - Press test	1	

When ordering, always specify Part Number, Description and Serial Number of Aircraft

PIPER PARTS CATALOG

Figure and Index Number	Part Number	Code	NOMENCLATURE	No Req	SERIAL NUMBERS AFFECTED
124-28	69364-00	N	PLACARD - Take-off check list	1	32-1111 to 32-7100038 incl
	69638-00	N	PLACARD - Take-off check list	1	32-7200001 and up
	69484-00	M	PLACARD - Take-off check list	1	32-40566 to 32-7140086 incl
	69637-00	M	PLACARD - Take-off check list	1	32-7240001 to 32-7240055 incl
	69649-00	M	PLACARD - Take-off check list	1	32-7240056 and up
	67879-00	L	PLACARD - Take-off check list	1	
-29	69365-00	AC	PLACARD - Landing check list	1	
	69639-00	AD	PLACARD - Landing check list	1	
	69639-02	AD	PLACARD - Landing check list	1	
	69669-125	K	PLACARD - Landing check list	1	
	67878-00	C	PLACARD - Landing check list	1	
	67878-02	C	PLACARD - Landing check list	1	
	69669-125	D	PLACARD - Landing check list	1	
-30	99921-00	AE	PLACARD - Air condition door light	1	
-31	67241-00	AB	PLACARD - Heater and defrost	1	
	35669-28	AB	PLACARD - Heater and defrost (lift to actuate)	1	
-32	69618-00	AF,AJ	PLACARD - Air conditioning control panel	1	32-40853, 32-7240056 to 32-7340042 incl
	69678-00	AF,AG	PLACARD - Air conditioning control panel	1	
	69678-02	AF,AH	PLACARD - Air conditioning control panel	1	
-33	69669-25	AK,AL	PLACARD - Vent fan control (four position)	1	
	35669-38	AK,AM	PLACARD - Vent fan control (three position)	1	
-34	69362-00	AN	PLACARD - Navigation and instrument lights	1	
	69669-21	AO	PLACARD - Navigation and instrument lights	1	
-35	69646-00	L,M	PLACARD - Alternate air	1	
36	69544-00	N	PLACARD - Carburetor heat	1	
-37	69669-71	C	PLACARD - Gear "UP-DOWN", mph	1	
	69669-91	C	PLACARD - Gear "UP-DOWN", knots	1	
	69669-133	D	PLACARD - Gear "UP-DOWN", knots	1	
-38	95978-00	C	PLACARD - Gear "UP-DOWN", mph	1	
	69669-52	C	PLACARD - Gear "UP-DOWN", knots	1	
	69669-172	D	PLACARD - Gear "UP-DOWN", knots	1	
-39	69669-176	M,N	PLACARD - Warning, strobe light	1	
	96802-00	L	PLACARD - Warning, strobe light	1	
-40	69669-181	L,AP	PLACARD - Reduce power	1	
-41	35669-14	AR	PLACARD - Warning, fuel	1	
-42	67788-00		PLACARD - Alternate air	1	
-43	65368-00	M,N	PLACARD - Oleo service instructions (decal) nose	1	
	69669-89	L	PLACARD - Oleo service instructions (decal) nose	1	
-44	35669-06		PLACARD - Turn limit	1	
-45	35669-05		PLACARD - Turn limit center mark	1	
-46	65369-00	M,N	PLACARD - Oleo service instructions (decal) main	2	
	69669-88	L,AS	PLACARD - Oleo service instructions (decal) main	2	
	69669-35	L,AT	PLACARD - Oleo service instructions (decal) main	2	
-47	35669-44	AU	PLACARD - Tire pressure	2	
-48	35669-23	AU	PLACARD - Gear	2	
-49	99367-00	AV	PLACARD - Main fuel tank	2	
	69669-82	S	PLACARD - Main fuel tank	2	
50	99368-00	AV	PLACARD - Tip fuel tank	2	
-51	35669-27		PLACARD - Flap lever	1	
-52	66934-00	B	PLACARD - Control lock	1	
-53	35669-16	H	PLACARD - A/P INTR	1	
-54	35669-17	H	PLACARD - Mike	1	
-55	99695-03	AW	PLACARD - Circuit breaker panel	1	
	99695-16	AO	PLACARD - Circuit breaker panel	1	
	35669-60	BS	PLACARD - Circuit breaker panel	1	
-56	99695-04	AW	PLACARD - Circuit breaker panel	1	
	69669-93	AO	PLACARD - Circuit breaker panel	1	
	35669-61	BT	PLACARD - Circuit breaker panel	1	
-57	69669-173		PLACARD - External power	1	

When ordering, always specify Part Number, Description and Serial Number of Aircraft

PIPER PARTS CATALOG

Figure and Index Number	Part Number	Code	NOMENCLATURE	No. Req.	SERIAL NUMBERS AFFECTED
124-58	69669-15	BQ	PLACARD - Warning (exposed switch)	1	
	69669-66	AY	PLACARD - Warning (recessed switch)	1	
	69669-107	AX	PLACARD - Warning	1	
-59	35669-105		PLACARD - ELT location	1	
-60	67490-02	BX	PLACARD - Pitch trim	1	
	87369-39	BY	PLACARD - Pitch trim		
-61	67492-00	AZ	PLACARD - AutoFlite trim (without tracker)	1	
	66800-00	AZ	PLACARD - AutoFlite trim (with tracker)	1	
	99448-00	BA	PLACARD - AutoFlite II	1	
-62	69509-00	BB	PLACARD - Omni coupler switch	1	
	96734-00	AB,BC	PLACARD - Omni coupler switch	1	
-63	69669-40	AB	PLACARD - Glide slope coupler	1	
-64	757 459	AB	PLACARD - Conduct trim check, see AFM (13A660)	1	
	763 418	AB	PLACARD - Conduct trim check, see POH (13A660-1)	1	
-65	69669-97	BD	PLACARD - Radar altimeter "ON-OFF"	1	
-66	69669-95	BD	PLACARD - Radar altimeter "OFF" for "Take-off"	1	
-67	69669-96	BD	PLACARD - Radar altimeter	1	
-68	35669-154	BE	PLACARD - Altitude reporter installed	1	
-69	68006-00	BF	NAMEPLATE - Six	2	
	63934-00	BF	NAMEPLATE - Cherokee	2	
	69576-00	BG	NAMEPLATE - Cherokee Six "C"	2	
	99445-00	BH	NAMEPLATE - Cherokee Six "D"	2	
	99709-00	BJ	NAMEPLATE - Cherokee Six "E"	2	
	69683-00	BK	NAMEPLATE - Cherokee Six	2	
	69856-00	N	NAMEPLATE - Cherokee Six 260	2	32-7600001 to 32-7700023 incl.
	69857-00	M	NAMEPLATE - Cherokee Six 300	2	32-7640001 to 32-7740113 incl.
	37982-02	N	NAMEPLATE - Cherokee Six 260	2	32-7800001 and up
	37983-02	M	NAMEPLATE - Cherokee SIX 300	2	32-7840001 and up
	38236-00	L	NAMEPLATE - Cherokee Lance	2	32R-7680001 to 32R-7780549
	37979-03	L	NAMEPLATE - Cherokee Lance	2	32R-7880001 and up
-70	48629-00	W,AB	MEDALLION - Piper logo	1	
-71	79688-00	BM	DECAL - Piper	2	
-72	22859-00	BF	STENCIL - Piper	2	
	66929-00	BN	STENCIL - Piper	2	
	37974-02	BO	STENCIL - Piper	2	
	79868-03	M	STENCIL - Piper Six 300	2	32-79400012 and up
-73	69427-02	N	PLACARD - 260, left	1	32-1111 to 32-7100038 incl.
	69427-03	N	PLACARD - 260, right	1	32-1111 to 32-7100038 incl.
	69427-04	M	PLACARD - 300, left	1	32-40566 to 32-7140086 incl.
	69427-05	M	PLACARD - 300, right	1	32-40566 to 32-7140086 incl.
	69631-00	N	PLACARD - 260	2	32-720000 to 32-7200055 incl.
	69631-02	M	PLACARD - 300	2	32-7240001 to 32-7240147 incl.
-74	99711-00	M	STENCIL - Piper air		2 32-4083, 32-7240056 and up
-75	99728-00	M	STENCIL - Piper air	1	32-4083, 32-7240056 and up
-76	79315-00	BP	STENCIL - Piper air	2	
-77	69669-114	BD	PLACARD - Warning	1	
-78	35669-125	M	PLACARD - Radio power on-off	1	32-8040001 and up
-79	36937-02	M	PLACARD - Emergency bus switch	1	32-8040001 and up
-80	35669-165	M	PLACARD - Caution	1	32-7940254 and up
-81	69345-00	N	PLACARD - Engine controls	1	32-1111 to 32-7200055 incl.
	69341-00	X,BU	PLACARD - Engine controls	1	
	69669-44	AB	PLACARD - Engine controls	1	
	763 911	BW	PLACARD - Loading limitation	1	
-82	87369-38	BY	PLACARD - On-off	1	
-83	450 741		DECAL - Lift detector (52207-4)	1	
-84	87369-22		PLACARD - Hydraulic fluid spec.	1	
-85	35669-25	M,BZ	PLACARD - Radar	1	32-7940063 and up

When ordering, always specify Part Number, Description, and Serial Number of Aircraft

3D7 INTENTIONALLY LEFT BLANK

CODE EXPLANATIONS FOR OPTIONAL EQUIPMENT AND REPAIR KITS

A - Used on PA-32-260 only.
B - Less Rotating Beacon 452 465.
C - Less Propeller 550 936 and Governor 66634-03.
D - Less External Power Connector Plug Assembly, Part Number 62355-02.
E - Less vacuum pump 26749-07 and drive kit 754 575.
F - Less main wheel fairings 65203-02 and 65203-03 and nose wheel fairing 65331-00.
G - Used on PA-32-260 with serial numbers 32-1 to 32-1110 incl., and PA-32-300 with serial numbers 32-40000 to 32-40565 incl.
H - Used on PA-32-260 with serial numbers 32-7100001 and up and PA-32-300 with serial numbers 32-7140001 and up.
J - Used on PA-32-260 with serial numbers 32-1 to 32-979 inclusive and PA-32-300 with serial numbers 32-40000 to 32-40339 incl.
K - Used on PA-32-260 with serial numbers 32-980 to 32-1320 incl. and PA-32-300 with serial numbers 32-40340 to 32-41018 incl.
L - Used on PA-32-260 with serial numbers 32-1111 to 32-1320 incl. and PA-32-300 with serial numbers 32-40566 to 32-41018.
M - Used on PA-32-260 with serial numbers 32-1111 and up and PA-32-300 with serial numbers 32-40566 and up.
N - Used on PA-32-260 with serial numbers 32-451 to 32-1110 incl. and PA-32-300 with serial numbers 32-40000 to 32-40565.
O - Used on PA-32-260 and PA-32-300.
P - Used on PA-32-260 with serial numbers 32-7200001 to 32-7500002 incl. and PA-32-300 with serial numbers 32-7240001 to 32-7540028 incl.
Q - Used on PA-32-260 with serial numbers 32-7500003 to 32-7700011 incl. and PA-32-300 with serial numbers 32-7540029 to 32-7740042 incl. and PA-32R-300 with serial numbers 32R-7680001 to 32R-7780188 incl.
R - Less door assembly 68999-00 for PA-32-260 with serial numbers 32-1 to 32-1110 incl., and PA-32-300 with serial numbers 32-40000 to 32-40565 incl. or door assembly 68999-06 for PA-32-260 with serial numbers 32-1111 to 32-7200055 incl. and PA-32-300 with serial numbers 32-40566 to 32-7240147 incl.
S - Used on PA-32-260 with serial numbers 32-451 to 32-7400061 incl. and PA-32-300 with serial numbers 32-40000 to 32-7440182.
T - Less seat assembly: see Seventh Seat Installation, Figure 32, to order seat assembly required.
U - Used on PA-32-260 with serial numbers 32-1 to 32-7100038 incl. and PA-32-300 with serial numbers 32-40000 to 32-7140086 incl.
V - Used on PA-32-260 with serial numbers 32-7600001 and up and PA-32-300 with serial numbers 32-7640001 and up.
X - Less reel seat covers: see Seat Installation, Figure 29, to order reel covers required.
Y - Used on PA-32-260 with serial numbers 32-1 to 32-7500038 incl. and PA-32-300 with serial numbers 32-40000 to 32-7540134 incl. Reference latest revision to Piper Service Letter 750.
Z - Used on PA-32-260 with serial numbers 32-1111 to 32-7400061 incl. and PA-32-300 with serial numbers 32-40566 to 32-7440182.
AA - Used on PA-32-300 with serial numbers 32-40566 and up and PA-32R-300.
AB - Used if existing door does not contain removable window retainer.
AC - Used on PA-32S-300 Seaplane Model only (Kit can be installed on aircraft that have been built and licensed as a PA-32S-300).
AD - Less Airspeed Indicator 63205-10 to True Airspeed Indicator 62143-10. Also less E. D. O. Floats 53520 which must be ordered separately from E. D. O. Corp.
AE - Used on PA-32R-300 only.
AF - Used on PA-32-260 with serial numbers 32-1111 and up, and PA-32-300 with serial numbers 32-40566 and up and PA-32R-300.
AG - Used on PA-32-260 with serial numbers 32-7700012 and up, and PA-32-300 with serial numbers 32-7740043 and up and PA-32R-300 with serial numbers 32R-7780189 and up.
AH - Order electric trim switch 63778-04 for a bowtie style control wheel or electric trim switch 79652-03 for a ramshorn style control wheel.
AJ - Used on PA-32-260 with serial numbers 32-1111 and up and PA-32-300 with serial numbers 32-40566 to 32-7840222 incl.
AK - Used on PA-32-300 only.
AL - Less Turn Coordinator Instrument, P/N 548 190. Reference latest revision to Piper Service Letter 864, Part III.
AM - Used on PA-32-260 with serial numbers 32-1 to 32-7300076 incl., and PA-32-300 with serial numbers 32-40000 to 32-7340201 incl.
AN - Used on PA-32-260 with serial numbers 32-7200001 and up; PA-32-300 with serial numbers 32-7240001 and up and PA-32R-300 with serial numbers 32R-7680001 and up.
AO - Used on PA-32-300 with serial numbers 32-7940001 and up and PA-32R-300.
AP - Used with forward facing center seats only. Not to be used with aft facing center seats.
AQ - Used on PA-32-260 with serial numbers 32-7700001 through 32-7800008 and PA-32-300 with serial numbers 32-7740001 through 32-794029, and PA-32R-300 with serial numbers 32R-7780001 through 32R-7880068.
AR - Used on PA-32-260 with serial numbers 32-1 through 32-1297, 32-710001 through 32-7100028, and PA-32-300 with serial numbers 32-40000 through 32-40974, 32-7140001 through 32-7140078.
AS - Used on PA-32-260 with serial numbers 32-1 through 32-7800008, PA-32-300 with serial numbers 32-40000 through 32-7940290, PA-32R-300 with serial numbers 32R-76800001 through 32R-7880068. Reference latest revision to Piper Service Bulletin 811 and Piper Service Spares Letter 406.
AT - Used on PA-32-260 with serial numbers 32-7400010 to 32-7400012, 32-7440028 to 32-7740045, and PA-32R-300 with serial numbers 32R-7680001 to 32R-7780207.
AU - Used on PA-32-260 with serial numbers 32-1 to 32-1297, 32-7100001 to 32-7500043, and PA-32-300 with serial numbers 32-4000 to 32-40974, 32-7140001 to 32-7540188.
AW - Used on PA-32-260 airplanes with serial numbers 32-1 to 32-14, 32-16 to 32-853 and PA-32-300 airplanes with serial numbers 32-15, 32-40001 to 32-40153 incl. Reference latest revision to Piper Service Bulletin 253.
AX - Used on PA-32-260 airplanes with serial numbers 32-1 to 32-14, 32-16 to 32-853 and PA-32-300 airplanes with serial numbers 32-15, 32-40001 to 32-40265 incl. Reference latest revision to Piper Service Bulletin 249.
AY - Reference latest revision to Piper Service Bulletin 463. Used on PA-32-260 with serial numbers 32-01 to 32-7500039 inclusive and PA-32-300 with serial numbers 32-40001 to 32-7540147 inclusive.
AZ - Reference latest revision to Piper Service Bulletin 955.
BA - Reference latest revision to Piper Service Bulletin 789.
BB - Reference latest revision to Piper Service Bulletin 261.
BC - Reference latest revision to Piper Service Bulletin 1006 for corrosion inspection of main spar behind fuel tanks.
BD - Reference latest revision to Piper Service Bulletin 1161.

CODE EXPLANATIONS FOR OPTIONAL EQUIPMENT AND REPAIR KITS

BE - Reference latest revision to Piper Service Bulletin 428.
BF - Reference latest revision to Piper Service Letter 581.
BG - Reference latest revision to Piper Service Bulletin 946, applicable to PA-32R-300.
BH - Reference latest revision to Piper Service Letter 620, applicable to PA-32-260 and PA-32-300.
BI - Reference latest revision to Piper Service Letter 864, Part II.
BJ - Reference latest revision to Piper Service Letter 647.
BK - Reference latest revision to Piper Service Letter 797.
BL - Reference latest revision to Piper Service Letter 861.
BM - Reference latest revision to Piper Service Bulletin 896.
BN - Reference latest revision to Piper Service Bulletin 337.
BO - Reference latest revision to Piper Service Bulletin 403.
BP - Reference latest revision to Piper Service Letter 566.
BQ - Reference latest revision to Piper Service Letter 1040.
BR - Reference latest revision to Piper Service Bulletin 427, applicable to PA-32-300.
BS - Reference latest revision to Piper Service Bulletin 317.
BT - Reference latest revision to Piper Service Letter 927.
BU - Reference latest revision to Piper Service Letter 700.
BV - Reference latest revision to Piper Service Letter 791.
BW - Reference latest revision to Piper Service Letter 934.
BX - Reference latest revision to Piper Service Letter 747.
BY - Reference latest revision to Piper Service Bulletin 646.
BZ - Reference latest revision to Piper Service Letter 768, applicable to PA-32R-300.
CA - Reference latest revision to Piper Service Letter 571, applicable to PA-32-260 and PA-32-300.
CB - Reference latest revision to Piper Service Bulletin 556 and Piper Service Letter 527.
CC - Reference latest revision to Piper Service Bulletin 257, applicable to PA-32-260.
CD - Reference latest revision to Piper Service Letter 758.
CE - Reference latest revision to Piper Service Letter 820.
CF - Reference latest revision to Piper Service Letter 762.
CG - Reference latest revision to Piper Service Letter 715.
CH - Reference latest revision to Piper Service Bulletin 239.
CI - Reference latest revision to Piper Service Bulletin 244.
CJ - Reference latest revision to Piper Service Bulletin 260.
CK - Reference latest revision to Piper Service Bulletin 329.
CL - Reference latest revision to Piper Service Bulletin 342.
CM - Reference latest revision to Piper Service Bulletin 387.
CN - Reference latest revision to Piper Service Bulletin 669.
CO - Reference latest revision to Piper Service Bulletin 866, Part I.
CP - Reference latest revision to Piper Service Letter 749, and Piper Service Letter 842.

PIPER PARTS CATALOG

Figure and Index Number	Part Number	Code	NOMENCLATURE	No. Req.	SERIAL NUMBERS AFFECTED
			OPTIONAL EQUIPMENT		
	473 617	V	LUGGAGE 24”		
	473 618	V	LUGGAGE 21”		
	753 692		MICROPHONE - Piper noise cancelling (with mounting bracket)		
	756 790	F,O	WHEEL FAIRING INSTALLATION		
	756 810	O	PIPER NAV TIMER		
	756 947	B,AM	NIGHT FLYING LIGHT INSTALLATION		
	756 950	A,C	CONSTANT SPEED PROPELLER INSTALLATION		32-1 to 32-1110 inclusive
	756 951	O	SINGLE TO DUAL TOE BRAKE		
	756 953	A,E	VACUUM PUMP INSTALLATION		32-1 to 32-450 inclusive
	757 005	O	HEATED PITOT STATIC INSTALLATION		
	757 022	R	CARGO DOOR INSTALLATION		
	757 026	G	AUTOFLITE (Less AutoNav Tracker)		
	757 031	G	ALTERNATE STATIC SYSTEM INSTALLATION		
	757 040	AH,N	ALTIMATIC III		
	757 043	E,S	VACUUM PUMP INSTALLATION		
	757 079	T,U,AP	SEVENTH SEAT INSTALLATION (HARDWARE ONLY)		
	757 085	CC	RUDDER TRIM MODIFICATION		32-1 thru 32-824 incl.
	757 086	S	AUTOCONTROL III		
	757 095	CH	WINDSHIELD COLLAR REPLACEMENT - (inner and outer)		32-1 to 32-200
	757 110	CI	CABIN HEATER DUCT TUNNEL MODIFICATION		32-1 to 32-853 incl.; 32-40001 to 32-40139 incl.
	757 112		NITROGEN CYLINDER ASSEMBLY - (With fittings)		
	757 137	Z	RADIO COUPLER INSTALLATION		
	757 139	AX	FUEL SYSTEM IMPROVEMENT KIT		
	757 152	AW	TIP TANK FUEL LINE MODIFICATION		
	757 163		PIPER MIXTURE CONTROL INDICATOR KIT		
	757 195	J	AUTONAV TRACKER INSTALLATION		
	757 196	K	AUTONAV TRACKER INSTALLATION		
	757 326	AJ	PLOTTER ASSEMBLY - Weight and Balance		
	757 342	G	PLOTTER ASSEMBLY - Weight and Balance		
	760 159	CJ	ENGINE AIR INLET DUCT MODIFICATION KIT		32-15, 32-4000 to 32-40399 incl.
	760 162	BB	AFT SPAR WING ATTACHMENT BOLT		
	760 189	M	MAP CLIP INSTALLATION		
	760 196	O	FUEL TANK DRAIN AND SAMPLER		
	760 210	AF	ALTERNATE STATIC SYSTEM INSTALLATION		
	760 296	AE	PITOT COVER		
	760 297	O	PITOT COVER		
	760 303	L	AUTOFLITE (Less AutoNav Tracker)		
	760 304	A,C	CONSTANT SPEED PROPELLER INSTALLATION		32-1111 to 32-7200055 incl.
	760 315	AD,	KIT - Seaplane conversion		32S-40000 to 32S-7240147 incl.
	760 365	U,X	INERTIA SAFETY SHOULDER BELT INSTALLATION - black		
	760 457	G	BAGGAGE DOOR LOCK CONVERSION - (Less lock)		
	760 461	A	CYLINDER HEAD TEMPERATURE GAUGE INSTALLATION)		32-1111 and up
	760 462	AA	CYLINDER HEAD TEMPERATURE GAUGE INSTALLATION		
	760 480	H	AUTOFLITE II (with Tracker)		
	760 481	H	AUTOFLITE II (without Tracker)		
	760 508	BP	III SERIES AUTOPILOT SERVO SPACER BUSHING INSTL.		
	760 515	CK	SEAT BELT ATTACHMENT HARDWARE		
	760 531	CA	FLAP HANDLE ASSEMBLY MODIFICATION		
	760 532	BN	VERTICALLY ADJ. SEAT FRAME TUBE REPLACEMENT		
	760 540	BF	AILERON HINGE DOUBLER REPLACEMENT		
	760 560	CL	FUEL TANK VENT MODIFICATION		
	760 664	P,T,AP	SEVENTH SEAT INSTALLATION (HARDWARE ONLY)		
	760 729	BH	FORWARD CABIN DOOR REINFORCEMENT		
	760 740	BJ	SEAT BACK STOP MODIFICATION		
	760 742	CM	ALTERNATOR INSTALLATION MODIFICATION		
	760 808	BO	STALL WARNING LIGHT RELOCATION MODIFICATION		
	760 822	BR	AIR CONDITIONING SYSTEM MODIFICATION		
	760 842	BU	TOE BRAKE MODIFICATION KIT		32-7400001 to 7400029 32-744001 to 7440086
	760 876	CG	ELT SWITCH COVER INSTALLATION MODIFICATION		

When ordering, always specify Part Number, Description, and Serial Number of Aircraft

PIPER PARTS CATALOG

Figure and Index Number	Part Number	Code	NOMENCLATURE	No. Req.	SERIAL NUMBERS AFFECTED
			OPTIONAL EQUIPMENT (cont')		
	760 885	BE	NOSE WHEEL STEERING MODIFICATION		
	760 889	BX	ENGINE CONTROL MODIFICATION		
	760 891	BX	ENGINE CONTROL MODIFICATION		
	760 910	CP	MAIN GEAR LINK BOLT (MOD SL# 842)		32-1 to 32-853 incl.; 32-40001 to 32-40057 incl.
	760 972	AY	FORWARD BAGGAGE DOOR MODIFICATION		
	760 975	Y	RAIN GUTTER INSTALLATION		
	760 994	M	ELECTRIC PITCH TRIM		
	760 997	AE	AUTOFLITE II (with Tracker)		
	760 998	AE	AUTOFLITE II (without Tracker)		
	761 008	Z	RADIO COOLING INSTALLATION KIT		
	761 009	CF	ENCAPSULATING ELT REMOTE SWITCH		
	761 021	AE	ELECTRIC PITCH TRIM		
	761 036	AE	HEATED PITOT STATIC INSTALLATION		
	761 039	CB	ELECTRIC TRIM SWITCH REPLACEMENT		
	761 042	BZ	AILERON BALANCE CABLE PULLEY SUPPORT BRACKET		
	761 051	Q,T,AP	SEVENTH SEAT INSTALLATION (HARDWARE ONLY)		
	761 052	AE	HEAVY DUTY BRAKES, WHEELS AND TIRES INSTALLATION		
	761 076	AE	NOSE GEAR SWITCH SHIELD INSTALLATION		32R-7680001 to 32R-7780009
	761 087	BV	ELECTRICAL SYSTEM REFINEMENT KIT		32R-7680001 TO 7680399
	761 091	D,O	AUXILIARY POWER RECEPTACLE INSTALLATION		
	761 093	D,AE	AUXILIARY POWER RECEPTACLE INSTALLATION		
	761 105	AT	CONTROL ASSY. & INSTALLATION - vertical adjusting seat		
	761 110	BK	FRONT SEAT MODIFICATION KIT		
	763 842	CE	ELT REPLACEMENT (Garrett to Narco)		
	763 846	T,AG,AP	SEVENTH SEAT INSTALLATION (HARDWARE ONLY)		
	763 870	BI	CONTROL ASSEMBLY CABIN HEAT AND DEFROSTER KIT		
	763 874	A,AL	VACUUM TO ELECTRIC TURN AND SLIP CONVERSION		32-1 to 32-450 inclusive
	763 887	BI	SUMP DRAIN VALVE MODIFICATION KIT		32R-7680001 to 32R-7880066
	763 890	BL	FORWARD FACING SEAT BACK MODIFICATION		
	763 931	AO	WEATHER RADAR SYSTEM (With RCA components)		
	763 934	BY	FUEL TANK VENT MOD AND VENT HOSE REPLACEMENT		
	763 961		DOOR JAMB SNUBBER INSTALLATION		
	763 968	AN,BM	SHOULDER HARNESS KIT - Passenger, center and aft seats		
	763 969	AN,BM	SHOULDER HARNESS KIT - Passenger, rear seats		
	763 971	CN	ALTIMATIC III STABILATOR TRIM CABLE ALIGNMENT MOD.		
	763 978	AO	WEATHER RADAR SYSTEM (Without RCA components)		
	764 011	BY	FUEL TANK VENT MOD AND VENT HOSE REPLACEMENT		
	764 135	BT	NOSE LANDING GEAR MODIFICATION		
	764 136	BW	BOTTOM COWL MODIFICATION		
	764 785		PUMP COVER - Baggage floor		32R-7680001 thru 32R-7880068
	764 982	AU,BM	INERTIA SAFETY BELT INSTALLATION		
	764 998	BA	AFT WING SPAR MODIFICATION - Corrosion aft spar rework		
	765 106	BA	INSPECTION ACCESS HOLE KIT		
	765 186	AS	AMMETER REPLACEMENT		
	765 199	CO	BACKUP LANDING GEAR EXTENDER REMOVAL		32R-768001 thru 32R-7880068
	765 363	AQ	SHOULDER HARNESS KIT - Aft facing seat		
	765 373	BM	SHOULDER HARNESS KIT - Aft facing seat		32R-778001 thru 32R-7880068
	765 384	AR,BM	SHOULDER HARNESS KIT - Center, aft (without cargo door)		32-1 thru 32-1297; 32-7100001 thru 32-7100028
	765 385	AR,BM	SHOULDER HARNESS KIT - Center, aft (with cargo door)		32-40000 thru 32-40974; 32-7140001 thru 32-7140078
	766 239		ENGINE GAUGE AND SENDER CROSS-REF.		
	766 244	BG	FRAME ASSEMBLY REPAIR KIT		
	766 253	AZ	ENGINE MOUNT DRAG LINK INSTALLATION		
	767 310	BQ	ALTERNATOR DRIVE BELT CONVERSION INSTALLATION		32-7240056 and up; 32R-7680001 and up
	767 384		INLINE AIR FILTER REPLACEMENT		32-7440063 thru 32-7940282

When ordering, always specify Part Number, Description, and Serial Number of Aircraft

PIPER PARTS CATALOG

Figure and Index Number	Part Number	Code	NOMENCLATURE	No. Req.	SERIAL NUMBERS AFFECTED
			OPTIONAL EQUIPMENT (cont')		
	38239-00	AE	PLOTTER ASSEMBLY - Weight and Balance		
	38480-02	AK	PLOTTER ASSEMBLY - Weight and Balance		32-7940001 and up
	88416-02		LANDING GEAR WARNING HORN FLASHER REPLACEMENT		32R-768001 thru 32R-7880068
	89500-800	BC	DINOTROL SERVICE KIT		
			REPAIR KITS		
	757 023	AB	AFT DOOR WINDOW REPLACEMENT		
	757 165		LANDING GEAR "O" RINGS AND SEALS		
	757 184		BRAKE SYSTEM "O" RINGS AND SEALS		
	760 451	BS	VERTICAL FIN RIB REPAIR KIT		
	761 065	CD	BENDIX IGNITION SWITCH REPAIR KIT		
	766 222		FIRE RESISTANT FIBERGLASS REPAIR KIT		32R-7680001 and up
	767 397	BD	RIB FLANGE REPAIR, L.H. (W.S. 49.25)		32R-7680001 thru 32R-7880068
	767 398	BD	RIB FLANGE REPAIR, R.H. (W.S. 49.25)		32R-7680001 thru 32R-7880068

NUMERICAL INDEX

Part Number	Figure and Index No.
11199-000	33-24
11199-000	33-26
11199-000	33-27
11199-000	33-28
11199-008	33-25
11199-008	116-28
11199-008	117-14
12715-000	98-14
12715-000	99-12
12761-002	99-46
13071-000	48-35
13074-002	49-3
13586-000	9-51
13945-040	16-18
14175-103	54-29
14627-003	19-17
14627-003	20-4
14635-002	19-19
14635-002	20-6
14843-016	54-15
14843-051	29-42
14843-051	32-11
14843-090	19-28
14843-090	20-15
14976-011	51-19
14976-015	50-54
14976-016	50-54
15206-002	49-11
15660-002	96-2d
15661-002	96-2e
16599-000	66-18
16599-000	67-18
16599-000	67-18a
16599-000	67A-18
16599-000	67A-19
16599-000	68-33
17555-000	102-4
17766-006	85-1
18161-000	16-16
18219-002	78-46
18219-002	79-48
18219-002	80-31
18219-002	81-47
18219-002	82-20
18219-002	83-36
18321-000	99-64
18457-000	2-5
18492-002	100-13
18622-000	66-18
19063-002	19-38
19063-002	20-35
19063-002	21-3
19063-002	22-25
19063-002	23-36
19336-000	29-14a
19336-000	29-21a
19336-000	29-27a
19336-000	30-11
19336-000	31-11
19336-001	29-14a
19336-001	29-21a
19336-001	29-27a
19336-001	30-11
19336-001	31-11
19365-002	29-14c
19365-002	29-21c
19365-002	29-27c
19365-002	30-9
19365-002	31-38
19392-015	29-14b
19807-000	98-16
20622-000	33-26
20735-005	51-11
20743-000	19-43c
20743-000	20-24
20747-000	19-43a
20747-000	20-25
20754-002	55-2
20784-000	51-14
20784-000	55-19
20868-000	29-34
21025-004	16-19
21027-000	16-20
21156-000	38-66
21156-000	39-59
21176-000	19-33
21176-000	20-20
21176-000	21-23
21230-000	85-50
21478-000	19-29
21478-000	20-19
21710-000	51-29
21712-002	51-17
21822-000	54-36
21831-004	51-31
21843-000	19-31
21843-000	20-17
21844-000	19-32
21844-000	20-18
22015-004	82-28
22015-006	76-12
22104-004	76-7
22105-003	38-49
22105-003	39-16
22105-003	77-33
22105-004	79-23
22105-007	85-24
22287-000	38-73
22287-000	77-43
22287-000	80-55
22418-002	123-38
22418-004	123-38
22482-000	8-30
22482-000	9-36
22482-000	13-63
22482-000	15-53
22859-000	123-37
22859-000	124-72
23319-000	87-28
23319-000	87-31
23515-000	16-15
23809-007	67-64
23969-002	98-5
23969-002	98-46
23969-002	99-6
23969-002	102-9
23969-003	98-40
23969-003	99-7
23969-005	99-8
23969-005	102-8
24047-000	78-6
24047-000	80-6
24047-000	81-6
24047-000	83-6
24048-000	77-5
24048-000	78-5
24048-000	80-5
24048-000	81-7
24048-000	83-5
24357-000	77-14
24357-000	78-15
24357-000	80-15
24357-000	83-15
24358-000	77-7
24358-000	78-9
24358-000	80-9
24358-000	83-9
24582-000	67-65
24995-000	67-17
24995-000	67A-17
24995-000	68-31
24995-000	68-72
25006-006	66-7
25290-000	37-31
25690-002	117-10
25690-002	119-16
25690-002	119A-16
26246-000	74-11
26246-000	75-2
26453-005	29-14b
26453-005	29-21b
26453-005	29-27b
26453-005	30-8
26653-000	30-16
26749-007	35-2
26749-007	36-2
26952-000	30-18
26953-000	30-23
26961-000	30-21
26965-000	30-19
26965-002	30-20
26966-000	30-22
27018-000	30-15
27244-000	30-24
27245-000	30-25
31197-000	85-25

Part Number	Figure and Index No.
31747-000	77-18
31747-000	78-37
31747-000	79-13
31747-000	80-60
31747-000	81-52
31747-000	82-13
31747-000	83-24
32212-003	118-16
32380-000	29-14d
32380-000	29-19
32380-000	29-25
32380-000	30-10
32380-000	31-40
35158-002	48-4
35207-000	101-42
35214-000	98-51
35214-000	99-59
35270-000	48-19
35270-000	50-29
35282-000	48-17
35282-000	50-32
35283-000	48-16
35283-000	50-30
35284-000	48-15
35284-002	48-15
35284-002	50-68
35402-000	93-20
35662-002	50-39
35664-002	2-52
35664-002	123-1
35664-002	124-1
35669-005	48-45
35669-005	51-52
35669-005	123-23
35669-005	124-45
35669-006	48-44
35669-006	51-51
35669-006	123-22
35669-006	124-44
35669-014	34-84
35669-014	124-41
35669-016	96-43
35669-016	124-53
35669-017	124-54
35669-018	21-26
35669-018	124-7
35669-023	58A-22
35669-023	124-48
35669-025	122-18
35669-025	124-85
35669-027	93-53
35669-027	123-27
35669-027	124-51
35669-028	34-44
35669-028	34-44
35669-028	124-31
35669-038	34-44
35669-038	124-33
35669-044	58A-13a
35669-044	124-47
35669-060	101-46
35669-060	124-55
35669-061	101-47
35669-061	124-56
35669-104	32B-21
35669-104	124-24
35669-105	110-19
35669-105	110A-13
35669-105	110B-12
35669-105	123-31
35669-105	124-59
35669-125	124-78
35669-126	117-20
35669-132	110B-11
35669-154	121-2
35669-154	124-68
35669-165	34-82
35669-165	124-80
35672-002	120-13
35680-005	34-87
35680-006	34-88
35680-011	34-91
35680-012	34-90
35680-015	34-93
35680-016	34-94
35680-022	34-92
35680-026	34-89
35725-002	2-6
35797-005	50-2
35944-014	58A-1
36535-002	35-2
36535-002	36-2
36551-002	24-7
36551-003	24-8
36558-002	38-40
36558-005	38-41
36558-008	38-39
36558-008	39-34
36559-003	58A-10
36559-004	58A-9
36565-002	13-69
36565-003	13-68
36572-003	19A-48a
36572-003	20-55c
36588-004	24-116
36589-004	24-11
36590-002	19A-41
36590-002	20-52
36598-002	19A-37
36612-002	28-44
36615-005	28-42
36616-003	28-43
36625-002	90-6
36625-003	90-6
36660-002	34-72
36800-002	32B-20
36801-002	32B-22
36801-003	32B-23
36802-002	32B-25
36803-002	32B-24
36858-002	31-14
36864-002	31-22
36880-004	122-5
36880-005	122-6
36880-007	122-9
36880-008	122-8
36880-009	122-7
36885-004	122-30
36885-005	122-29
36886-002	122-21
36886-008	122-22
36886-009	122-23
36887-013	122-1
36937-002	124-79
37380-000	34-66
37388-000	5-28
37388-001	5-28
37399-002	101-16
37487-000	5-25
37489-000	34-64
37693-004	120-1
37694-002	120-2
37722-002	62-4
37722-003	62-7
37729-000	96-2f
37729-002	96-42
37732-000	55-13
37796-002	32A-3
37797-002	32A-6
37799-002	32A-1
37799-002	32B-1
37799-003	32A-2
37799-004	32A-5
37799-005	32A-8
37799-010	32A-1
37799-010	32B-1
37799-011	32A-2
37799-012	32A-5
37799-013	32A-8
37823-002	32A-4
37823-007	32A-4
37824-002	32A-7
37825-007	32B-27
37829-003	32B-19
37834-002	32B-13
37835-002	32B-14
37839-002	32B-15
37840-002	32A-4
37850-002	32B-6
37871-003	98-57
37871-004	99-77
37871-005	98-56
37871-005	99-76
37873-003	98-55
37873-003	99-75
37880-002	53-52
37880-002	58A-24
37880-003	53-52
37880-003	58A-24
37881-002	58A-27
37881-003	58A-27
37882-002	58A-2
37882-002	58A-14
37882-004	58A-3
37882-004	58A-15
37891-002	58A-5
37891-006	58A-6
37891-007	58A-7
37897-002	4-7a
37902-002	31-49
37902-006	31-49
37902-008	31-47
37902-009	31-47
37926-003	58A-9
37926-004	58A-10
37929-002	48-46
37932-002	48-47
37939-002	98-54
37939-002	99-74
37939-003	8-13
37939-003	8-44
37970-002	50-22
37970-005	50-22
37974-002	124-72
37979-003	124-69
37982-002	124-69
37983-002	124-69
37996-002	21-21
37997-002	28-6
37997-002	43-5
37998-002	101-52
37999-002	101-51

Part Number	Figure and Index No.
38001-000	8-1
38001-005	8-1
38001-903	8-3
38001-905	8-24
38001-906	8-25
38001-906	13-1
38001-907	8-32
38001-907	14-1
38001-908	8-4
38001-909	8-5
38001-909	10-1
38001-910	8-14
38001-910	11-1
38001-911	8-22
38001-911	12-1
38001-923	8-3
38001-927	8-32
38001-927	14-1
38019-003	67A-42
38019-003	68-14
38019-005	67A-14
38019-005	68-13
38019-008	74-29
38019-008	75-23
38020-000	68-1
38020-034	68-1
38023-002	13-78
38023-003	13-79
38024-000	39-68
38024-001	39-68
38025-000	39-69
38025-001	39-69
38034-000	10-10
38035-000	10-2
38035-002	10-6
38035-003	10-3
38035-004	10-3
38037-000	10-9
38037-004	10-8
38037-005	10-11
38037-006	10-11
38039-002	65-44
38040-002	50-7
38041-000	13-65
38041-001	13-65
38041-002	50-23
38044-000	10-17
38046-000	8-11
38046-002	8-42
38047-000	13-80
38047-002	13-81
38050-000	65-28
38052-000	65-27
38053-000	65-26
38054-000	65-25
38055-000	13-82
38056-000	13-83
38062-002	102-16
38062-004	102-20
38062-010	102-17
38065-000	50-21
38068-000	50-33
38068-002	50-38
38070-000	62-12
38070-001	62-12
38070-004	62-13
38071-000	62-19
38071-001	62-19
38071-008	62-26
38074-000	62-18
38075-000	62-14
38076-000	62-16
38076-001	62-16
38076-004	62-17
38076-005	62-17
38078-002	50-20
38080-000	67A-55
38080-000	68-17
38080-009	67A-56
38080-009	68-18
38080-012	67A-60
38080-012	68-22
38080-015	67A-58
38080-015	68-20
38080-017	67A-62
38080-017	68-24
38080-024	67A-57
38080-024	68-19
38082-000	62-22
38084-000	81-41
38086-000	75-13
38086-014	74-28
38086-014	75-14
38086-015	74-16
38090-002	81-54
38090-003	81-55
38091-000	81-1
38094-000	81-26
38094-002	107-13
38097-000	4-45
38097-000	5-21c
38097-001	4-45
38097-001	5-21c
38097-002	5-21b
38097-003	5-21b
38097-004	4-44
38097-005	4-44
38098-000	4-43
38098-000	5-21a
38098-001	4-43
38098-001	5-21a
38099-000	4-42
38099-000	5-20
38100-000	5-17
38100-001	5-17
38100-004	4-39
38100-005	4-39
38102-000	2-13
38102-001	2-13
38103-002	65-38
38108-000	62-20
38109-000	62-21
38115-000	4-46
38115-000	5-21d
38115-001	4-46
38115-001	5-21d
38116-000	4-37
38116-000	5-43
38118-000	3A-5
38118-005	2-23
38119-000	3A-27
38119-001	3A-27
38121-900	2-1
38121-901	2-1
38121-906	2-2
38121-906	3A-1
38121-907	2-2
38121-907	3A-1
38121-908	2-3
38121-908	3A-25
38121-909	2-3
38121-909	3A-25
38121-910	2-2a
38121-910	3A-20
38121-911	2-2a
38121-911	3A-20
38121-912	2-4
38121-912	5-1
38121-913	2-4
38121-913	5-1
38121-957	5-2
38121-958	5-2
38123-000	89-33
38123-002	89-34
38128-000	5-44
38128-000	89-40
38136-000	13-66
38136-001	13-66
38136-008	13-67
38136-009	13-67
38137-002	71-3
38137-003	71-2
38137-004	71-1
38137-005	71-4
38137-006	71-5
38137-007	71-6
38143-003	105-11
38143-004	105-9
38145-000	39-63
38145-006	39-64
38146-000	71-7
38146-002	71-7
38147-000	39-65
38147-001	39-65
38148-000	39-66
38149-000	99-61
38149-005	101-55
38151-000	50-3
38151-003	48-41
38154-000	89-4
38155-000	67A-41
38155-000	68-69
38156-000	13-40
38158-000	38-75
38158-000	39-11
38159-000	71-9
38159-002	71-9
38162-000	71-10
38162-006	71-10
38166-000	68-27
38167-000	3A-21
38167-001	3A-21
38169-000	2-24
38171-006	87-40
38174-000	50-34
38174-004	50-37
38175-000	65-35
38178-002	24-4
38182-000	24-30
38183-000	24-31
38183-004	24-31
38185-000	65-33
38186-000	24-33
38186-002	24-33
38188-000	24-32
38188-004	24-32
38192-000	45-40
38193-000	24-106
38193-004	24-106
38195-000	5-21e
38200-000	81-10
38202-000	81-11

Part Number	Figure and Index No.
38204-000	39-62
38204-003	38-77
38206-000	5-6
38206-001	5-6
38210-000	5-33
38210-001	5-33
38211-000	3A-19
38211-001	3A-19
38217-000	3A-8
38217-001	3A-8
38218-000	3A-18
38218-001	3A-18
38222-000	45-19
38223-000	3A-3
38223-001	3A-3
38224-000	34-21b
38227-900	8-28
38228-900	8-26
38229-900	8-10
38230-002	91-3
38230-004	91-4
38232-004	50-13
38234-000	50-15
38236-000	124-69
38239-000	Misc.-
38245-000	45-18
38251-002	99-57
38251-003	99-58
38252-002	99-72
38252-003	99-73
38255-002	101-40
38261-002	50-58
38404-011	3A-20
38404-900	2-1
38404-901	2-1
38404-906	2-2
38404-906	3A-1
38404-907	2-2
38404-907	3A-1
38404-908	2-3
38404-908	3A-25
38404-909	2-3
38404-909	3A-25
38404-910	2-2a
38404-910	2a-2
38404-910	3A-20
38404-912	2-4
38404-912	4-1
38404-913	2-4
38404-913	4-1
38416-002	8-28
38417-002	13-33
38417-003	13-33

Part Number	Figure and Index No.
38480-002	Misc.-
38582-002	4-7b
38582-004	2-58
38992-005	65-1
38995-002	65-86
38996-003	65-1b
38998-005	65-1
41001-010	92-1
42891-000	19-34
44386-003	51-18
48629-000	124-70
50111-000	29-9
50111-000	30-7
50111-000	93-15
52586-002	115-1
61402-093	50-11
61879-002	66-59
61879-002	67-16
61879-002	67A-16
62002-002	45-20
62002-003	45-21
62002-004	45-22
62016-010	57-17
62017-002	57-12
62019-002	96-3
62019-004	96-3
62021-000	3-3
62021-001	3-3
62022-002	3-4
62022-003	3-4
62022-004	3A-4
62022-005	3A-4
62023-000	3-29
62023-001	3-29
62024-000	3-24
62024-000	3-30
62024-000	3A-29
62024-001	3-24
62024-001	3-30
62024-001	3A-29
62024-002	3-31
62024-003	3-31
62033-000	90-3
62033-000	91-2
62033-000	91-20
62044-000	90-12
62044-000	91-10
62044-000	91-12
62047-006	4-8
62047-007	4-8
62049-000	3-28
62049-001	3-28
62053-000	4-15

Part Number	Figure and Index No.
62053-000	5-10
62053-001	4-15
62053-001	5-10
62054-000	4-16
62054-000	5-11
62054-001	4-16
62054-001	5-11
62055-000	4-17
62055-000	5-12
62057-000	4-19
62057-000	5-14
62058-000	4-20
62058-000	5-15
62058-001	4-20
62058-001	5-15
62059-000	90-5
62060-000	90-9
62060-001	90-9
62060-004	90-9
62060-005	90-9
62061-002	3-17
62061-004	4-35
62061-005	3A-17
62066-000	3-18
62070-006	4-23
62070-007	4-23
62070-008	4-22
62070-009	4-22
62070-010	4-22
62070-011	4-22
62071-000	4-25
62071-001	4-25
62072-000	4-24
62072-001	4-24
62073-004	4-40
62073-005	4-40
62079-000	4-26
62082-000	3-26
62082-001	3-26
62083-001	3-27
62083-006	3-27
62084-000	3-5
62086-000	3-8
62086-001	3-8
62087-000	3-9
62087-005	3A-9
62091-000	3-10
62091-000	3-25
62091-002	3A-10
62102-000	4-32
62102-001	4-32
62105-000	4-21
62105-000	5-16

Part Number	Figure and Index No.
62109-000	2-21
62121-000	2-19
62129-003	4-2
62129-003	5-35
62129-004	4-2
62129-004	5-35
62129-007	4-3
62129-007	5-36
62129-008	4-3
62129-008	5-36
62143-010	33-2
62143-010	34-4
62145-000	117-17
62146-000	116-13
62146-001	116-13
62163-000	116-3
62163-000	123-34
62170-000	116-14
62170-000	123-35
62198-002	33-45
62198-003	33-45
62198-003	116-15
62226-000	104-1
62226-000	105-1
62227-000	104-2
62227-000	105-2
62238-005	111-1
62238-010	111-1
62239-000	111-13
62245-007	37-51
62279-000	102-5
62280-000	116-16
62317-000	37-14
62320-003	6-17
62320-004	6-19
62321-002	6-2
62321-003	6-2
62322-002	6-4
62322-003	6-4
62323-000	6-5
62324-000	6-16
62324-001	6-16
62327-000	6-6
62328-000	6-7
62328-000	6-11
62328-001	6-7
62328-001	6-11
62329-000	6-8
62330-000	6-9
62330-001	6-9
62331-000	6-10
62331-001	6-10
62332-000	6-8

Part Number	Figure and Index No.
62332-000	6-18
62332-002	6-8
62332-002	6-18
62333-000	6-12
62333-001	6-12
62334-000	6-13
62334-002	6-13
62335-000	6-14
62335-002	6-14
62336-000	6-15
62336-004	6-15
62336-008	6-15
62347-002	33-35
62347-002	123-17
62353-004	24-70
62353-005	24-70
62355-002	105-4
62355-003	105-5
62358-000	33-21
62361-000	7-2
62361-001	7-2
62367-000	7-4
62371-008	4-33
62371-008	5-41
62372-000	7-5
62372-001	7-5
62373-000	7-3
62373-001	7-3
62378-000	33-22
62403-000	100-9
62413-000	15-17
62413-001	15-17
62414-000	15-18
62414-001	15-18
62420-008	11-6
62420-010	11-6
62420-011	8-19
62420-022	8-19
62420-023	11-6
62420-024	11-6
62420-025	11-6
62420-026	11-6
62421-000	13-36
62421-001	13-36
62433-000	13-9
62443-000	15-12
62444-003	15-6
62444-005	15-6
62445-000	15-11
62451-000	15-19
62452-000	15-20
62452-001	15-20
62453-000	15-9
62455-000	15-21
62457-000	15-22
62457-001	15-22
62471-000	15-23
62479-000	11-7
62479-002	11-7
62491-000	8-16
62492-000	11-45
62493-000	8-17
62493-000	11-45
62494-002	11-32
62495-002	11-33
62501-000	11-47
62506-000	9-28
62506-000	11-66
62506-003	11-72
62506-004	11-73
62510-000	11-44
62511-002	11-31
62514-000	9-15
62514-000	10-24
62516-000	11-8
62521-009	9-7
62521-015	9-6
62522-000	9-17
62522-000	10-22
62524-000	13-8
62524-001	13-14
62542-000	9-43
62542-000	10-41
62542-001	9-43
62542-001	10-41
62543-000	13-4
62543-002	13-4
62544-001	13-15
62545-000	13-46
62554-000	14-14
62554-000	14-16
62557-004	29-39
62558-000	13-10
62558-001	13-16
62563-000	14-20
62563-001	14-20
62566-000	14-21
62576-000	11-34
62576-000	14-2
62581-000	13-25
62581-001	13-25
62601-002	13-55
62606-000	13-56
62607-000	13-57
62608-000	13-58
62620-000	13-60
62640-000	9-46
62640-000	9-47
62644-000	9-48
62644-000	10-43
62645-004	15-24
62649-000	60-28
62653-004	9-18
62653-004	10-26
62654-000	29-40
62654-000	29-41
62654-003	29-41
62655-000	29-41
62656-000	11-46
62664-000	13-61
62665-002	15-15
62674-001	9-16
62674-001	10-25
62674-003	9-16
62674-003	10-25
62679-000	13-59
62679-001	13-59
62686-001	13-23
62686-002	13-23
62697-000	11-74
62697-002	11-74
62701-003	92-12
62701-005	92-14
62701-008	92-2
62701-008	92-3
62701-012	92-4
62701-013	92-5
62701-014	93-31
62701-018	92-12
62701-020	92-14
62701-023	92-3
62701-023	92-3
62701-027	92-4
62701-028	92-5
62701-029	93-31
62701-036	92-6
62701-036	92-13
62701-036	92-14
62701-037	92-7
62701-037	92-8
62701-037	92-9
62701-038	92-8
62701-040	92-10
62701-041	92-11
62701-041	94-58
62701-042	18-29
62701-042	113-2
62701-047	94-1
62701-048	92-13
62701-050	92-6
62701-051	92-7
62701-051	92-9
62701-053	92-10
62701-054	92-11
62701-054	94-58
62701-055	92-13
62701-060	113-2
62701-134	92-2
62701-135	119-27
62701-135	119A-27
62703-021	96-4
62703-023	96-3
62703-028	96-3
62703-034	96-4
62706-000	93-5
62706-007	93-5
62709-000	92-70
62710-002	92-71
62710-003	92-72
62711-002	92-16
62711-002	92-87
62711-002	93-32
62711-003	92-33
62711-003	94-7
62711-004	15-16
62711-004	94-15
62711-005	92-88
62712-002	93-34
62712-002	96-6
62712-003	92-15
62712-004	96-6
62713-002	93-33
62713-003	92-17
62713-004	92-87
62713-004	92-88
62714-002	92-20
62714-003	92-21
62714-003	94-9
62714-004	77-11
62714-004	78-13
62714-004	80-13
62714-004	83-13
62715-002	92-35
62715-002	94-8
62715-003	92-34
62716-004	96-18
62716-005	96-18
62716-006	96-18
62716-007	96-18
62727-000	93-51
62727-001	93-51
62733-000	93-12

Part Number	Figure and Index No.
62734-000	93-13
62734-002	93-13
62736-000	93-14
62738-000	93-6
62740-000	93-7
62743-002	92-22
62743-003	92-23
62743-004	92-24
62743-005	92-25
62743-006	92-26
62743-008	92-27
62743-009	92-28
62743-010	92-29
62743-011	92-30
62745-000	93-20
62745-002	119-49
62745-003	119-50
62753-000	15-7
62762-000	92-19
62763-000	13-28
62764-002	93-22
62764-003	93-21
62766-000	92-74
62766-003	92-74
62771-000	92-73
62771-001	92-73
62778-000	96-13
62782-000	96-12
62784-000	96-11
62789-000	93-3
62817-000	15-8
62820-000	93-27
62821-000	93-28
62825-000	96-8
62827-007	24-24
62829-005	95-1
62831-000	95-8
62832-000	95-9
62833-006	19-4
62833-006	19A-39
62833-006	20-44
62833-007	48-33
62833-007	67A-59
62833-007	68-21
62833-010	50-56
62833-011	86-51
62833-011	88-16
62833-011	89-54
62833-017	97-13
62833-018	94-54
62833-020	19-35
62833-020	20-79
62833-021	19-60b
62833-021	19A-49
62833-023	9-79
62833-023	10-54
62833-027	53-39
62833-028	74-20
62833-028	75-22
62833-036	86-56
62833-036	88-27
62833-036	89-53
62833-039	19A-58
62833-043	50-42
62833-043	50-48
62833-044	54-5a
62833-044	54-9a
62833-045	51-27
62833-046	81-20
62833-050	78-18
62833-050	80-18
62833-050	81-17
62833-050	83-18
62833-064	50-49
62833-074	103-36
62833-078	29-5
62833-078	31-15
62833-082	42-10
62833-083	42-7
62833-085	96-36
62833-086	67A-61
62833-086	68-23
62833-086	96-36
62833-087	50-48
62833-101	44-30
62833-101	44-36
62833-101	77-46
62833-101	78-58
62833-101	80-62
62833-101	81-69
62833-103	62-30
62833-103	77-46
62833-103	78-58
62833-107	19A-36
62833-107	19A-48b
62833-107	20-55b
62833-107	50-42
62833-124	54-48
62833-127	95-15
62834-000	96-19
62834-002	96-19
62836-000	95-12
62837-000	95-13
62837-002	95-13
62838-000	95-14
62839-000	96-15
62840-002	96-33
62840-003	96-33
62845-000	96-14
62845-002	96-14
62848-002	96-9
62849-000	96-17
62852-000	96-31
62856-000	93-50
62856-001	93-50
62866-000	97-17
62867-002	63-9
62869-000	9-8
62870-000	9-5
62871-000	9-9
62873-003	11-13
62873-005	11-14
62873-006	11-15
62873-010	11-13
62873-011	11-14
62873-012	11-15
62874-003	11-11
62874-004	11-11
62874-006	11-11
62897-000	33-34
62897-000	123-16
62937-008	21-5
62942-000	34-55
62943-000	34-54
62943-000	34-57
62944-000	34-56
62974-000	14-3
62987-000	76-22
63006-006	19-36
63006-007	19-37
63007-000	19-39
63012-000	19-40
63020-002	19-61
63020-002	19-75
63020-002	19A-60
63020-002	20-68
63020-002	20-72
63020-002	77-27
63020-002	78-27
63034-000	19-3
63034-002	19-3
63036-000	19-6
63036-003	19A-43
63036-004	19A-43
63037-000	11-16
63037-000	12-23
63039-000	19-14
63039-000	19-41
63039-000	19A-50
63039-000	20-81
63039-002	19-14
63039-002	20-52
63042-000	19-9
63042-003	19A-42
63045-000	19-10
63045-000	19A-40
63045-000	20-50
63047-012	19-2
63050-000	19-2a
63051-000	19-2a
63055-002	19-43
63070-007	16-4
63070-007	17-35
63070-007	18-49
63070-014	16-6
63070-021	16-2
63070-022	16-3
63070-023	16-2
63070-024	16-3
63070-026	16-1
63070-026	17-1
63070-027	16-1
63070-027	17-1
63071-002	16-23
63071-002	17-19
63071-002	18-23
63071-017	17-33
63071-018	17-34
63076-000	16-5
63077-000	16-5
63078-008	15-34
63078-011	88-60
63078-017	5-57
63080-000	100-8
63082-000	35-15
63086-000	74-26
63116-004	25-3
63116-006	25-4
63116-048	25-4
63116-049	25-3
63116-093	25-4
63116-094	25-3
63116-132	25-4
63116-133	25-3
63118-000	24-36
63131-000	24-2
63131-008	24-2
63131-010	24-2
63142-002	24-45
63142-013	24-46
63142-014	24-47
63142-015	24-48

Part Number	Figure and Index No.
63142-016	24-49
63142-016	26-12
63142-017	24-50
63142-017	26-13
63142-018	24-51
63142-019	24-52
63142-020	24-53
63142-021	24-54
63142-022	26-15
63142-023	26-12
63142-023	26-14
63142-024	26-13
63142-024	26-14
63142-028	22-21
63142-028	23-28
63142-029	22-22
63142-029	23-29
63142-030	22-23
63142-030	23-30
63142-033	24-53
63142-034	24-88
63142-041	26-15
63142-045	24-46
63142-046	24-47
63142-050	24-47
63142-055	24-46
63142-056	24-45
63147-002	24-9
63147-004	24-9
63148-002	24-10
63148-005	24-10
63149-010	16-43
63149-011	16-43
63149-014	16-43
63149-015	16-43
63149-022	18-19
63149-023	18-19
63151-002	19-44
63151-003	19-44
63176-021	45-4c
63186-002	45-17
63186-003	89-42
63186-004	59-2
63186-012	120-7
63186-033	59-5
63187-011	19-45
63187-012	19-45
63205-010	33-2
63205-010	34-4
63207-000	37-7
63209-000	37-8
63211-000	37-8
63211-000	37-9
63211-000	37-14
63211-000	37-32
63211-000	118-55
63211-000	119-38
63211-000	119A-32
63211-000	121-3
63212-004	35-16
63216-000	33-27
63218-005	9-35
63218-005	13-62
63222-000	101-43
63243-002	71-16
63257-000	11-18
63257-000	12-16
63257-000	22-24
63257-000	23-31
63264-000	45-36
63287-000	24-14
63293-002	11-20
63293-002	12-17
63293-002	22-16
63293-002	23-24
63307-000	53-8
63308-000	53-61
63310-000	53-37
63311-000	53-4
63311-003	53-3
63312-000	53-29
63312-002	53-30
63314-000	53-7
63315-000	57-15
63324-004	60-1
63325-000	60-2
63327-006	48-7
63332-003	53-48
63332-005	53-49
63338-000	59-1
63339-000	59-3
63339-001	59-3
63339-002	59-4
63340-000	59-7
63340-001	59-7
63341-000	59-6
63342-000	59-8
63354-000	60-26
63356-000	60-53
63357-000	60-54
63358-000	60-55
63365-000	57-10
63365-002	57-10
63366-000	37-45
63367-000	57-11
63370-004	53-52
63370-004	58-6
63370-005	53-52
63370-005	58-6
63373-000	58-7
63381-000	48-1
63391-000	93-10
63391-002	93-11
63391-003	93-10
63392-000	46-2
63392-001	46-2
63393-000	46-3
63393-001	46-3
63395-000	47-21
63396-002	47-20
63398-000	47-4
63398-001	47-4
63404-000	96-10
63419-002	97-3
63420-002	97-2
63420-004	97-2
63420-007	97-2
63425-000	66-7
63451-000	97-14
63455-000	97-12
63456-000	97-9
63457-000	97-5
63457-003	97-5
63458-000	97-4
63458-004	97-4
63459-005	97-1
63459-011	97-1
63459-018	97-1
63464-005	63-1
63465-000	4-37
63465-000	37-48
63465-002	4-37
63465-002	37-48
63468-000	63-2
63469-000	63-3
63469-001	63-4
63470-000	63-5
63474-000	63-26
63478-000	63-7
63483-000	53-51
63484-000	53-50
63485-000	63-8
63485-001	63-8
63485-002	63-8
63485-003	63-8
63500-008	45-2
63500-008	47-1
63501-003	47-5
63502-000	47-6
63504-000	47-10
63506-000	47-9
63509-000	47-12
63510-000	47-14
63513-000	47-2
63515-000	47-13
63517-000	45-4
63530-000	94-55
63531-000	103-26
63543-000	47-28
63544-000	47-27
63545-000	47-26
63546-000	47-24
63550-000	47-23
63560-002	45-7
63560-002	46-23
63560-003	46-24
63561-005	46-12
63562-000	46-13
63563-000	46-20
63564-000	46-21
63565-002	46-22
63566-002	46-17
63566-002	46-18
63566-003	46-17
63566-003	46-18
63567-000	46-19
63567-003	46-19
63569-000	46-14
63570-000	46-15
63571-000	46-16
63571-000	46-16a
63571-002	46-16a
63572-000	46-9
63573-000	46-4
63573-001	46-4
63575-000	46-5
63575-002	46-5
63584-016	45-5
63585-003	45-6
63585-004	45-6
63586-000	45-8
63586-001	45-8
63587-002	45-9
63587-003	45-9
63588-000	45-10
63594-000	63-24
63595-000	2-20
63596-000	8-9
63633-002	9-58
63633-019	38-46
63633-020	66-61
63633-022	38-9

Part Number	Figure and Index No.
63633-030	38-12
63633-030	39-5
63633-031	38-11
63633-032	38-10
63633-033	38-13
63633-034	38-9
63633-035	38-14
63633-036	39-53
63633-040	38-10
63633-041	38-14
63633-041	67-19
63633-042	38-13
63633-042	67-19
63633-049	38-10
63633-053	87-42
63633-054	38-69
63633-062	9-51
63633-064	38-12
63633-065	38-11
63633-066	38-12
63633-066	39-7
63633-100	43-31
63633-124	28-11
63633-126	28-12
63633-127	28-41
63633-129	28-13
63633-136	9-74
63633-136	10-45
63633-147	28-11
63633-153	28-13
63633-156	39-6
63633-157	39-8
63633-158	39-9
63633-158	67A-29
63633-159	67A-29
63633-161	39-10
63633-162	38-10
63656-000	48-18
63656-002	48-18
63656-002	50-31
63670-000	69-8
63684-004	66-23
63744-008	21-25
63744-009	16-19
63744-009	17-6
63744-009	18-4
63744-010	22-35
63744-010	23-22
63744-011	62-3
63760-000	66-2
63760-003	66-2
63766-000	33-46
63766-000	34-53

Part Number	Figure and Index No.
63778-000	96-2a
63778-004	96-2a
63779-000	93-18
63781-000	93-9
63782-000	93-8
63782-003	93-17
63782-004	93-8
63824-005	85-14
63824-012	85-14
63825-005	85-15
63825-010	85-15
63858-000	98-7
63866-003	101-41
63874-000	98-44
63874-000	99-14
63874-002	98-44
63874-002	99-14
63882-008	92-82
63882-009	94-41
63882-017	86-14
63882-041	92-82
63890-002	102-30
63897-003	42-34
63897-004	98-49
63897-004	99-45
63897-006	28-45
63897-006	103-29
63900-011	55-45
63900-019	2-54
63900-019	39-20
63900-020	2-55
63900-025	20-74
63900-025	37-15
63900-025	76-17
63900-026	92-80
63900-027	38-18
63900-028	24-19
63900-030	3-12
63900-031	21-10
63900-031	62-29
63900-031	92-31
63900-031	92-81
63900-032	92-32
63900-037	92-32
63900-038	76-16
63900-038	93-25
63900-039	86-67
63900-039	93-26
63900-041	48-21
63900-046	9-72
63900-046	11-75
63900-046	11-82
63900-047	11-75

Part Number	Figure and Index No.
63900-048	11-77
63900-050	19-11
63900-050	19A-44
63900-050	20-51
63900-050	20-51a
63900-053	29-32
63900-055	94-23
63900-056	94-22
63900-057	94-12
63900-058	94-13
63900-060	94-61
63900-061	94-25
63900-062	94-11
63900-064	9-77
63900-064	10-52
63900-066	113-7
63900-067	113-8
63900-070	20-74
63900-070	37-15
63900-071	92-80
63900-073	19-61
63900-073	19-75
63900-073	19-75
63900-073	21-10
63900-073	92-31
63900-073	92-81
63900-074	92-32
63900-075	65-78
63900-075	93-25
63900-076	93-26
63900-078	77-46
63900-078	78-58
63900-078	80-62
63900-079	22-27
63900-079	23-33
63900-081	22-13
63900-081	23-12
63900-082	22-13
63900-082	22-14
63900-085	54-37
63900-088	54-11
63900-089	54-14
63900-096	67-63
63900-103	55-40
63900-108	48-33
63900-109	51-20
63900-115	55-38
63900-122	51-21
63900-123	38-18
63900-124	38-23
63900-130	54-12
63900-131	60-57
63900-133	32-7

Part Number	Figure and Index No.
63900-133	86-49
63900-133	88-65
63900-136	23-33
63900-136	39-71
63900-137	37-24
63900-138	48-36
63900-144	29-33
63900-145	29-49
63900-146	29-50
63900-146	36-32
63900-147	29-51
63900-147	62-31
63900-149	29-52
63900-149	32-14
63900-149	32B-10
63900-168	62-27
63900-174	93-44
63901-009	63-16
63901-009	65-3
63901-015	86-20
63901-015	88-66
63901-017	53-47
63901-017	55-42
63901-021	65-4
63901-023	85-2
63901-024	85-3
63901-024	87-1a
63901-025	85-4
63901-026	66-14
63901-026	67-21
63901-026	67-22
63901-026	67A-21
63901-027	66-13
63901-027	67-23
63901-027	67A-23
63901-028	63-15
63901-029	63-17
63901-030	60-51
63901-030	63-18
63901-030	65-5
63901-031	65-6
63901-032	87-2
63901-033	87-3
63901-035	67-20
63901-035	67-22
63901-035	67A-22
63901-036	87-4
63901-040	87-2
63901-042	87-1
63901-052	68-64
63901-065	63-27
63901-073	67A-20
63901-077	85-1

Part Number	Figure and Index No.
63901-098	68-41
63901-099	68-70
63901-100	68-44
63902-012	76-1
63902-013	76-2
63902-014	38-15
63902-015	38-44
63902-021	76-2
63902-022	79-1
63904-007	102-7
63904-013	102-7
63904-014	40-4
63904-015	40-5
63904-016	40-6
63904-017	40-7
63904-018	40-12
63904-022	86-70
63904-022	88-7
63904-024	5-50
63904-029	35-7
63904-029	36-8
63904-030	86-40
63904-030	88-6
63904-046	41-7
63904-047	41-8
63904-048	41-9
63904-049	41-6
63904-064	102-21
63904-067	42-21
63904-068	42-22
63904-082	65-93
63904-086	102-18
63904-087	102-22
63904-089	28-14
63904-092	42-21
63904-112	28-46
63909-000	10-48
63910-000	48-15
63911-000	48-16
63913-005	35-14
63913-007	36-14
63913-026	37-33
63913-026	85-5
63913-030	66-12
63913-030	67-24
63913-030	67A-24
63913-032	37-12
63913-034	37-2
63913-034	37-35
63913-034	121-4
63913-035	37-13
63913-036	119-81
63913-037	37-3
63913-037	37-35
63913-037	121-5
63913-042	35-10
63913-042	35-11
63913-042	36-12
63913-042	36-13
63913-043	118-51
63913-048	82-18
63913-049	60-22
63913-049	78-42
63913-049	83-29
63913-051	35-12
63913-052	35-8
63913-054	35-9
63913-055	35-8
63913-055	35-13
63913-055	36-9
63913-056	37-20
63913-056	118-65
63913-058	35-23
63913-058	36-14
63913-059	37-13
63913-060	118-53
63913-061	118-52
63913-062	35-9
63913-062	36-10
63913-066	65-7
63913-070	37-33
63913-070	119-61
63913-070	119A-46
63913-071	36-10
63913-071	36-11
63913-076	19A-47
63913-084	122-11
63913-092	89-38
63913-093	89-37
63913-115	121-6
63913-132	60-22
63913-133	68-68
63913-138	119-62
63913-138	119a-47
63913-139	119-59
63913-139	119A-44
63913-143	113-20
63913-143	113-28
63913-143	113-29
63913-144	113-21
63913-150	113-29
63913-151	113-20
63913-152	113-21
63913-153	122-12
63913-154	122-13
63913-157	65-7a
63913-159	119-62
63913-178	122-14
63913-185	122-15
63913-193	90-10
63913-194	90-10a
63913-199	43-32
63914-004	38-45
63914-005	38-16
63914-007	60-56
63915-006	60-23
63915-023	99-65
63916-002	76-18
63920-000	96-2
63925-000	48-17
63927-000	9-76
63927-000	10-51
63934-000	123-36
63934-000	124-69
63940-003	24-5
63940-004	24-5
63940-005	24-5
63940-006	24-5
63942-000	2-53
63942-001	2-53
63944-000	80-27
63944-000	81-43
63954-000	90-4
63968-005	123-38
63968-010	123-38
63976-017	60-37
63976-023	86-61
63976-023	88-26
63976-023	89-52
63977-000	102-2
63998-016	2-11
63998-016	90-1
63998-017	2-11
63998-017	90-1
64384-000	55-39
65003-003	97-11
65003-004	92-83
65003-006	94-42
65003-010	16-20c
65003-010	17-10
65003-010	18-8
65003-015	50-56a
65003-021	65-46
65003-030	50-20a
65003-030	65-74a
65003-032	57-23
65003-044	54-18
65003-045	50-47
65003-047	30-5
65003-047	92-87
65003-047	92-88
65003-056	44-6
65005-000	53-15
65006-000	53-16
65007-000	49-9
65010-003	48-38
65010-003	49-1
65010-004	49-28
65020-006	4-13
65020-006	5-29
65020-007	4-13
65020-007	5-29
65030-000	72-4
65032-000	73-4
65034-000	47-11
65034-001	47-11
65038-000	69-1
65039-000	69-2
65041-000	69-3
65047-000	48-48
65050-000	97-10
65056-000	4-34
65070-005	74-24
65070-005	75-15
65071-000	13-29
65072-000	8-31
65077-000	8-29
65103-002	72-13
65103-002	73-17
65107-000	90-21
65108-004	90-22
65108-005	90-22
65112-000	15-27
65114-000	15-28
65119-000	14-4
65119-001	14-4
65122-000	11-64
65126-000	13-75
65126-001	13-76
65127-000	13-76
65137-000	72-3
65139-000	72-12
65142-007	66-9
65142-008	66-10
65142-009	66-10
65148-000	74-11a
65148-000	75-9
65148-001	74-11a
65148-001	75-9
65151-000	74-17
65152-014	86-21
65152-014	88-42

Part Number	Figure and Index No.
65152-015	86-13
65152-016	86-14
65152-017	86-15
65152-017	88-46
65152-018	85-16
65152-019	79-38
65152-019	82-17
65152-020	86-21
65152-020	88-44
65152-021	86-15
65152-021	88-48
65152-022	87-10
65152-023	87-39
65165-025	37-47
65165-045	40-8
65165-087	44-29
65169-009	72-5
65178-002	74-13
65192-005	111-12
65192-010	111-12
65198-000	73-6
65199-000	103-27
65202-000	74-12
65202-005	74-12
65203-000	58-5
65203-001	58-5
65203-002	58-5
65203-003	58-5
65208-002	66-3
65208-003	66-3
65210-000	76-21
65214-000	98-8
65216-000	95-11
65219-000	24-96
65219-000	123-39
65221-002	66-15
65222-000	98-11
65244-000	94-52
65245-000	94-56
65246-000	94-43
65248-003	94-48
65249-000	94-44
65249-002	94-44
65250-000	94-57
65250-002	94-57
65251-000	94-53
65252-000	94-45
65253-002	94-46
65254-000	94-33
65265-000	7-6
65265-001	7-6
65276-000	49-33
65280-000	49-8
65286-005	19-50
65286-005	20-64
65286-005	24-67
65286-006	19-50
65286-006	20-64
65286-006	24-67
65286-007	19-50
65286-007	20-64
65286-007	24-67
65286-008	19-50
65286-008	20-64
65286-008	24-67
65289-000	86-38
65289-000	88-4
65291-003	74-6
65291-003	75-6
65291-007	74-4
65299-002	7-8
65299-003	7-8
65304-000	19-52
65304-000	20-66
65304-000	24-69
65318-000	38-8
65318-000	39-4
65319-004	53-19
65331-000	58-1
65332-000	58-2
65332-003	58-2
65333-004	111-10
65333-006	111-11
65341-000	47-22
65342-002	45-3
65342-002	47-19
65343-000	15-33
65345-003	45-19
65356-000	19-53
65356-000	123-3
65364-003	85-7
65364-004	85-6
65364-004	85-8
65364-005	85-9
65365-002	85-10
65365-003	85-11
65365-004	85-12
65366-000	85-13
65368-000	48-20
65368-000	123-21
65368-000	124-43
65369-000	53-42
65369-000	58A-34
65369-000	123-24
65369-000	124-46
65372-000	98-34
65372-000	99-40
65388-006	15-17
65388-007	15-17
65388-008	15-18
65388-009	15-18
65388-012	15-9
65388-017	93-51
65388-018	93-51
65388-019	93-22
65388-031	47-24
65388-032	47-23
65388-049	94-45
65388-058	20-28
65388-059	9-2
65388-060	14-26
65388-061	14-26
65388-065	94-48
65389-002	86-44
65392-000	86-35
65396-000	86-48
65397 000	123-12
65397-000	24-95
65400-000	86-71
65400-002	86-71
65400-002	88-8
65400-002	89-8
65401-000	86-45
65402-000	66-8
65402-002	66-8
65403-000	66-20
65406-010	24-94
65406-011	24-94
65406-012	24-94
65407-000	86-36
65407-007	86-36
65407-007	88-2
65407-007	89-2
65409-000	86-47
65410-002	24-93
65410-003	24-93
65410-006	24-93
65413-000	49-5
65414-000	13-32
65415-000	13-33
65428-000	13-33
65429-000	85-20
65438-000	78-40
65438-000	82-16
65438-000	83-27
65440-007	21-4
65440-007	22-20
65440-007	23-27
65440-010	32B-26
65440-801	21-4
65442-000	69-9
65442-000	70-6
65451-003	82-14
65451-004	79-3
65451-006	79-4
65457-000	9-45
65459-000	13-32
65461-006	86-39
65461-006	88-5
65461-007	86-39
65461-007	88-5
65461-015	86-39
65461-015	88-5
65461-019	86-39
65461-019	88-5
65461-019	89-5
65485-000	53-21
65488-000	53-20
65490-000	53-19
65493-010	53-1
65493-011	53-1
65494-000	15-30
65519-000	32-10
65524-000	116-3
65524-000	123-34
65531-000	116-26
65533-000	8-29
65546-000	24-36
65546-004	24-36
65556-000	14-3a
65556-002	14-3a
65564-002	24-56
65567-000	19-43b
65567-000	20-26
65577-002	86-18
65578-002	85-16
65586-004	6-12
65586-005	6-12
65587-000	6-13
65588-000	6-3
65589-000	6-4
65590-001	2-8
65590-001	6-1
65591-000	2-8
65591-000	6-1
65592-000	6-2
65592-001	6-2
65593-000	6-14
65593-001	6-14
65594-000	6-13
65594-001	6-13
65595-001	6-19

Part Number	Figure and Index No.
65617-000	76-2
65617-000	79-2
65618-000	76-1
65656-000	13-51
65656-001	13-51
65657-000	13-50
65674-005	24-2
65674-006	24-2
65674-007	24-2
65688-000	59-3
65688-001	59-3
65688-002	59-4
65688-003	59-4
65690-000	4-7c
65690-001	4-7c
65692-002	9-45
65692-002	10-56
65692-002	23-39
65692-003	9-45
65692-003	10-56
65725-002	25-28
65725-003	25-28
65725-004	25-28
65725-005	25-28
65725-006	25-28
65725-007	25-28
65725-008	25-28
65725-009	25-28
65726-002	57-14
65726-003	57-14
65726-004	57-13
65727-000	19-73
65727-000	19A-57
65727-000	20-67
65735-003	24-98
65735-004	24-98
65735-006	24-44
65735-007	24-44
65735-012	24-98
65735-013	24-44
65735-018	24-98
65735-019	24-44
65741-000	16-20b
65741-000	17-9
65741-000	18-7
65742-000	16-20a
65742-000	17-8
65742-000	18-6
65745-000	16-20
65746-002	16-13
65750-000	16-14
65763-000	29-44
65763-001	29-44

Part Number	Figure and Index No.
65764-002	29-43
65764-003	29-43
65764-004	29-43
65764-005	29-43
65764-006	29-43
65764-007	29-43
65764-008	29-43
65764-011	29-43
65768-000	24-64
65768-001	24-64
65773-000	2-56
65782-000	17-11
65782-000	18-9
65784-000	113-13
65795-000	33-48
65795-000	34-52
65797-005	37-1
65815-004	2-10
65815-004	90-16
65815-005	2-10
65815-005	90-16
65816-000	86-19a
65816-000	88-9
65821-002	113-1
65821-003	113-1
65824-000	68-11
65825-000	16-14
65825-000	17-5
65825-002	16-14
65825-002	17-5
65826-002	16-13
65826-002	17-4
65826-004	16-13
65826-004	17-4
65826-008	16-13
65826-008	17-4
65865-000	24-101
65866-002	24-75
65868-000	24-71
65869-000	24-72
65870-000	24-73
65871-000	24-74
65879-000	29-16a
65879-000	29-22a
65879-000	29-28a
65889-000	74-18
65889-000	75-16
65896-000	16-20
65896-000	17-7
65896-000	18-5
65896-002	16-20
65896-002	17-7
65896-002	18-5

Part Number	Figure and Index No.
65898-000	4-30
65898-000	5-39
65898-001	4-30
65898-001	5-39
65898-004	4-28
65898-004	5-37
65899-000	6-5
66529-000	5-21
66530-000	95-7
66546-000	96-29
66552-000	29-1
66552-001	29-1
66552-002	29-16
66552-003	29-2
66552-004	29-2
66553-000	29-17
66553-002	29-18
66553-003	29-22
66554-000	29-23
66554-002	29-24
66554-003	29-28
66580-002	98-39
66580-002	102-24
66580-002	104-11
66582-000	4-27
66582-000	4-41
66582-000	5-19
66582-001	4-27
66582-001	4-41
66582-001	5-19
66595-000	2-2
66595-000	3-1
66595-001	2-2
66595-001	3-1
66597-000	4-9
66597-000	4-38
66597-001	4-9
66597-001	4-38
66597-002	4-38
66597-003	4-38
66598-000	4-10
66598-000	4-11
66598-000	5-27
66598-001	4-10
66598-001	4-11
66598-001	5-27
66599-000	4-12
66599-001	4-12
66601-000	2-1
66601-001	2-1
66602-000	2-4
66602-000	4-1
66602-001	2-4

Part Number	Figure and Index No.
66602-001	4-1
66602-004	2-4
66602-004	4-1
66602-005	2-4
66602-005	4-1
66609-000	14-3
66614-000	5-32
66615-002	24-2
66615-003	24-2
66615-014	24-2
66616-000	102-3
66618-000	48-3
66618-002	48-3
66618-003	48-3
66620-000	3-16
66620-000	3A-16
66621-000	3-15
66621-000	3A-15
66623-000	3-13
66623-000	3A-13
66623-001	3-13
66623-001	3A-13
66632-000	98-12
66632-000	99-10
66632-002	98-12
66632-002	99-10
66634-003	66-46
66634-003	67-2
66634-003	82-1
66634-003	83-23
66634-008	68-2
66634-009	66-46
66634-009	67-2
66634-009	67A-2
66641-000	19-30
66641-000	20-16
66647-000	19-63
66648-000	19-64
66652-000	19-2
66652-012	19-2
66654-000	19-21
66654-000	20-8
66710-016	20-61a
66710-016	24-65a
66710-016	32B-8
66710-017	19-48a
66710-017	19A-3
66710-017	24-65a
66710-017	32B-8
66710-021	19-48c
66710-021	20-62a
66710-021	24-65c
66710-026	19-48c

Part Number	Figure and Index No.
66710-026	20-62a
66710-026	24-65c
66710-044	19-48c
66710-044	19A-5
66710-044	20-62a
66710-044	24-65c
66744-000	101-20
66748-000	101-10
66750-000	48-13
66761-000	3-11
66761-001	3-11
66761-002	3A-11
66761-003	3A-11
66762-000	4-18
66762-000	5-13
66766-000	7-7
66766-001	7-7
66767-000	2-9
66767-000	7-1
66767-001	2-9
66767-001	7-1
66769-000	15-26
66770-000	2-3
66770-000	3-23
66770-001	2-3
66770-001	3-23
66771-000	3-26
66771-001	3-26
66772-000	3-27
66772-001	3-27
66773-000	81-12
66774-000	81-18
66780-000	63-26
66787-000	24-111
66787-000	123-13
66787-000	124-19
66788-002	24-29
66788-004	24-29
66788-014	24-29
66789-000	38-50
66789-000	39-14
66789-000	66-25
66789-000	66-45
66789-000	67-36
66789-000	67A-36
66789-000	76-6
66789-000	77-36
66789-000	78-36
66789-000	79-20
66789-000	80-44
66789-000	81-56
66789-000	85-23
66789-000	85-24
66789-000	87-26
66789-000	98-19
66789-000	99-23
66789-000	114-17
66793-009	21-2
66794-000	9-20
66794-000	10-28
66798-000	115-9
66800-000	114-10
66800-000	123-33
66800-000	124-61
66804-000	24-9
66805-000	24-10
66813-800	32B-33
66813-801	32B-33
66815-000	90-7a
66815-000	90-19a
66815-000	91-14a
66817-000	90-7
66817-000	90-19
66817-000	91-14
66820-000	53-51
66820-000	55-17
66821-004	58-7
66821-004	58A-23
66821-005	58A-23
66822-009	45-13
66822-010	45-14
66843-000	49-2
66848-004	19-36
66853-000	65-95
66855-000	77-44
66855-000	78-44
66855-000	80-59
66855-004	80-59
66855-004	81-37
66856-005	38-15
66856-005	77-22
66856-005	78-22
66857-000	38-72
66913-000	19-2a
66913-004	19-2a
66914-000	19-2a
66914-003	19-2a
66915-000	19-2b
66916-000	19-2b
66929-000	124-72
66931-000	9-9e
66932-000	96-38
66934-000	96-39
66934-000	123-28
66934-000	124-52
66940-000	29-44
66940-001	29-44
66955-000	15-10
66962-000	41-1
66964-000	47-2
66964-002	47-3
66965-000	14-3
66972-000	47-8
66974-000	15-29
66975-000	47-1
66975-003	45-2
66975-003	47-1
66975-004	45-2
66978-000	41-2
66979-000	81-3
66980-000	38-73
66980-000	39-2
66980-000	77-43
66980-000	78-43
66980-000	80-55
66980-000	81-38
66984-000	30-1
66984-001	30-1
66984-004	30-2
66984-006	30-3
66984-007	30-3
66992-000	30-2a
67023-000	55-9
67024-000	54-23
67024-001	54-23
67025-002	54-13
67025-009	54-10
67025-010	54-10
67026-007	51-3
67026-007	51-26
67026-007	51-32
67026-007	55-11
67026-007	55-20
67026-011	51-23
67026-011	51-23
67026-017	55-12
67028-000	54-24
67031-002	54-22
67031-003	54-22
67036-000	55-18
67037-006	55-16
67040-014	54-2
67040-015	54-2
67042-013	54-6
67050-002	51-2
67053-000	4-6a
67053-000	5-5a
67054-003	51-22
67060-000	4-4
67060-001	4-4
67060-004	5-4
67060-005	5-4
67060-008	4-4
67060-009	4-4
67061-000	4-6
67061-001	4-6
67061-004	4-6
67061-004	5-5
67061-005	4-6
67061-005	5-5
67065-000	5-54
67069-000	5-18
67069-001	5-18
67071-000	5-42
67071-000	54-56
67071-001	5-42
67071-001	54-56
67079-000	5-24
67079-001	5-24
67090-010	62-1
67090-011	62-1
67091-000	62-8
67093-004	62-2
67093-005	62-2
67095-000	5-8
67095-001	5-8
67096-000	5-9
67096-001	5-9
67097-002	5-22
67097-003	5-22
67100-007	50-1
67100-007	51-1
67106-000	51-53
67107-000	51-28
67114-000	50-28
67128-000	34-66
67135-003	60-55
67137-000	60-25
67138-000	60-24
67139-000	60-27
67140-002	60-28
67148-000	51-30
67155-000	50-5
67164-000	2-25
67164-001	2-25
67168-000	48-40
67168-000	50-17
67168-000	50-61
67169-000	50-18
67177-003	9-65
67189-000	50-19
67192-000	50-66

Part Number	Figure and Index No.
67193-003	96-31
67198-000	54-54
67202-000	54-35
67203-000	54-38
67212-000	77-3
67212-000	78-3
67212-000	80-3
67212-000	83-3
67214-000	77-4
67214-000	78-4
67214-000	80-4
67214-000	81-5
67214-000	83-4
67215-000	77-8
67215-000	78-10
67215-000	80-10
67215-000	83-10
67215-003	81-9
67216-000	77-8
67216-000	78-10
67216-000	80-10
67216-000	81-9
67216-000	83-10
67218-000	77-9
67218-000	77-17
67218-000	78-11
67218-000	80-11
67218-000	80-18
67218-000	80-19
67218-000	81-13
67218-000	83-11
67218-000	83-18
67218-000	83-19
67218-002	77-17
67218-002	78-19
67218-002	80-19
67218-002	81-14
67218-002	83-19
67223-000	77-2
67223-000	78-2
67223-000	80-2
67223-000	83-2
67223-004	81-2
67235-000	24-86
67241-000	34-44
67241-000	34-44c
67241-000	124-31
67244-000	50-27
67245-000	51-33
67249-000	15-13
67259-000	9-67
67277-000	55-44
67336-000	24-1
67338-000	60-2
67363-000	65-34
67404-002	98-42
67404-002	99-42
67404-003	98-43
67404-003	99-43
67409-000	101-31
67411-002	99-47
67411-004	99-47
67411-005	99-51
67411-006	99-55
67411-007	99-51
67411-008	99-49
67411-021	99-53
67412-004	101-20
67422-004	34-28
67422-005	101-33
67422-006	101-34
67422-007	101-35
67422-010	101-36
67422-011	101-32
67422-012	101-25
67422-013	101-27
67422-014	101-26
67431-000	34-30
67431-004	34-31
67436-004	101-17
67436-006	101-18
67437-000	101-19
67439-000	101-39
67445-000	113-14
67445-002	119-44
67445-002	119A-38
67462-003	34-2
67462-006	33-1a
67462-006	34-2a
67463-000	96-2g
67469-000	9-50
67490-002	113-15
67490-002	119-39
67490-002	119A-33
67490-002	124-60
67492-000	114-10
67492-000	124-61
67494-000	117-17
67494-001	117-17
67502-000	54-34
67517-000	71-8
67549-000	60-59
67552-000	16-5
67553-000	16-5
67564-009	29-43
67600-000	65-58
67600-000	65-88
67639-012	83-25
67652-000	71-11
67670-000	5-46
67670-001	5-46
67673-000	5-3
67677-000	5-48
67677-001	5-48
67678-000	5-49
67678-001	5-49
67687-000	5-47
67687-001	5-47
67689-002	5-23
67689-003	5-23
67690-008	5-7
67690-009	5-7
67691-000	5-26
67691-001	5-26
67694-000	5-45
67700-006	65-8
67700-007	65-9
67700-044	66-43
67700-044	67-10
67700-045	66-17
67700-045	67-26
67700-046	87-10
67700-047	87-39
67700-048	80-32
67700-048	81-33
67700-050	78-41
67700-050	83-28
67700-051	85-17
67700-051	87-9
67700-052	85-19
67700-052	87-11
67700-081	66-43
67700-081	67-10
67700-081	67A-10
67700-081	68-62
67700-082	66-17
67700-082	67-26
67700-082	67A-26
67700-082	68-61
67700-096	89-30
67700-098	89-29
67700-100	89-28
67700-101	89-27
67700-104	89-31
67700-107	65-11
67700-108	65-12
67700-110	65-14
67700-111	65-15
67700-112	65-16
67700-113	65-17
67700-114	65-18
67700-115	65-19
67700-116	65-20
67700-117	65-21
67700-118	65-22
67700-119	65-23
67700-120	87-7
67700-121	89-26
67700-122	89-32
67700-123	65-24
67700-124	65-83
67700-160	121-3
67700-339	89-29
67700-404	65-98
67700-405	65-98a
67700-406	65-13
67700-407	65-10
67702-000	24-109
67702-000	124-17
67723-000	2-57
67723-001	2-57
67728-000	90-25
67728-000	91-23
67731-000	65-29
67732-000	65-30
67738-000	65-29
67742-000	11-64
67743-002	65-32
67748-002	65-2
67753-000	55-14
67755-000	51-16
67755-000	55-4
67758-000	51-44
67768-000	37-34
67768-000	123-40
67768-000	124-42
67786-000	24-105
67786-000	123-11
67786-000	124-14
67790-000	66-2
67790-000	67-3
67790-000	67A-3
67790-000	68-3
67790-000	82-2
67790-000	83-43
67791-000	66-3
67791-000	67-4
67791-000	67A-4
67791-000	68-5
67791-000	82-3
67791-000	83-44
67793-000	66-48

Part Number	Figure and Index No.
67793-000	67-5
67793-000	67A-5
67793-000	82-4
67793-000	83-45
67793-003	66-48
67793-003	67-5
67793-003	67A-5
67793-003	68-4
67793-003	82-4
67793-003	83-45
67794-000	66-47
67794-000	67-6
67794-000	67A-6
67794-000	68-6
67794-000	82-5
67794-000	83-46
67797-004	54-17
67797-005	54-17
67869-000	124-28
67878-000	34-42
67878-000	124-29
67878-002	34-42
67878-002	124-29
67879-000	34-41
67905-002	25-4
67905-003	25-4
67905-004	25-4
67905-005	25-4
67905-006	25-4
67906-002	25-3
67906-003	25-3
67906-004	25-3
67906-005	25-3
67906-006	25-3
67909-000	51-15
67926-040	55-10
67926-041	55-10
67958-002	29-22c
67958-002	29-28
67958-002	29-28c
67958-002	31-52
67968-002	24A-1
67968-003	24A-1
67968-004	24A-2
67968-005	24A-2
67968-006	24A-3
67968-007	24A-3
67968-008	24A-4
67968-009	24A-4
67968-010	24A-5
67968-011	24A-5
67969-002	24A-18
67969-003	24A-17
67969-004	24A-16
67969-005	24A-9
67969-007	24A-11
67969-008	24A-10
67969-009	24A-13
67969-010	24A-12
67969-011	24A-15
67969-012	24A-14
67970-002	32B-28
67984-002	96-40
68005-000	79-10
68005-000	80-33
68005-000	81-34
68006-000	123-36
68006-000	124-69
68014-000	8-46
68017-000	24-82
68022-014	29-38
68022-014	32-9
68022-014	32B-16
68023-000	82-17
68029-000	73-16
68029-009	73-16
68030-000	73-15
68030-010	73-15
68031-000	73-14
68031-004	73-14
68031-005	73-14
68031-007	73-14
68032-000	73-13
68033-000	73-1
68046-000	67-14
68047-000	67-60
68053-000	73-2
68054-000	73-3
68055-000	73-5
68059-000	29-2a
68061-000	29-1
68061-002	29-2
68061-003	29-16
68067-000	29-16a
68067-000	29-22a
68067-000	29-28a
68068-000	29-20
68068-000	29-26
68068-000	32-5
68068-003	29-22
68069-000	29-23
68069-002	29-24
68069-003	29-28
68071-000	29-24a
68072-000	29-24a
68073-000	32-5
68086-000	29-17
68086-002	29-18
68088-000	29-18a
68090-004	24-20
68090-005	24-20
68090-006	24-20
68090-007	24-20
68090-016	24-20
68090-017	24-20
68091-004	24-21
68091-005	24-21
68091-006	24-21
68091-007	24-21
68091-014	24-21
68091-015	24-21
68092-000	25-16
68093-000	24-22
68093-000	25-19
68094-002	25-17
68094-003	24-17
68094-003	25-17
68095-000	29-18a
68096-000	25-18
68098-000	9-50
68105-000	2-9
68105-000	7-1
68105-001	2-9
68105-001	7-1
68106-000	7-8
68106-001	7-8
68111-000	3-7
68111-000	3A-7
68113-200	3-6
68113-200	3A-6
68113-201	3-6
68113-201	3A-6
68115-000	37-10
68116-000	37-11
68119-000	3-14
68119-000	3A-14
68123-000	2-8
68123-000	6-1
68123-003	2-8
68123-003	6-1
68126-000	57-8
68128-000	57-7
68128-002	57-7
68129-000	2-9
68129-000	7-1
68129-001	2-9
68129-001	7-1
68130-000	21-1
68134-000	21-7
68135-000	21-6
68136-000	21-8
68139-000	21-8
68143-000	74-25
68144-000	118-30
68144-000	119-52
68145-000	118-31
68146-000	118-35
68146-000	119-54
68146-003	20-1
68149-000	118-32
68149-000	119-32
68153-000	9-37
68153-001	9-37
68154-000	9-57
68155-000	9-38
68155-001	9-38
68156-000	9-39
68157-000	9-39
68161-000	74-26
68163-000	9-40
68174-000	20-28
68175-000	20-43
68175-002	20-43
68176-000	20-46
68176-002	20-46
68176-003	20-46
68178-000	20-49
68178-003	20-49
68179-000	19-7
68179-000	19A-45
68179-000	20-47
68179-002	19-8
68179-002	19A-46
68179-003	20-48
68179-004	20-47
68179-005	20-48
68179-006	20-47
68179-007	19A-45
68179-008	19A-46
68180-000	19-5
68181-000	20-23
68183-000	20-27
68185-000	19-1
68186-000	20-45
68186-002	20-45
68187-000	20-21
68188-000	19-16
68188-000	20-3
68193-000	118-54
68193-000	118-64
68193-004	119-63
68193-004	119A-48

Part Number	Figure and Index No.
68193-007	121-7
68195-000	104-9
68198-000	104-8
68198-000	105-8
68199-000	40-3
68201-000	8-1
68201-002	8-1
68201-003	8-1
68201-004	8-1
68201-005	8-1
68201-006	8-1
68201-007	8-1
68201-008	8-1
68201-009	8-1
68201-010	8-1
68201-011	8-1
68201-012	8-1
68202-000	8-3
68202-002	8-3
68202-003	8-3
68202-004	8-3
68203-000	9-41
68206-000	40-2
68207-000	40-1
68209-000	24-15
68209-002	24-15
68210-000	8-4
68210-002	8-4
68210-003	8-4
68210-004	8-4
68210-005	8-4
68210-006	8-4
68210-007	8-4
68210-008	8-4
68210-009	8-4
68210-010	8-4
68210-011	8-4
68211-000	8-5
68211-000	9-1
68211-002	8-10
68211-004	8-8
68211-005	8-7
68211-006	8-7
68211-008	8-5
68211-008	9-1
68211-009	8-5
68211-009	9-1
68212-000	9-2
68212-002	9-2
68214-002	10-4
68214-003	10-4
68215-000	10-5
68216-000	9-2a
68217-000	9-2b
68217-000	10-7
68223-000	11-79
68225-000	11-81
68228-002	11-68
68228-003	12-34
68229-002	11-69
68229-003	12-35
68229-004	9-46
68230-000	9-3
68240-000	9-4
68240-002	9-4
68252-000	9-10
68252-000	10-19
68253-000	9-10
68253-000	10-19
68254-000	9-11
68254-000	10-20
68255-000	9-14
68255-000	10-23
68255-001	9-14
68257-000	9-13
68257-000	10-22
68258-000	9-12
68258-000	10-21
68258-005	9-12
68258-005	10-21
68260-000	9-19
68264-000	13-73
68266-000	9-21
68267-000	10-30
68268-002	9-22
68268-002	10-12
68271-000	33-28
68272-002	9-9a
68272-002	9-52
68272-002	10-32
68272-003	9-9b
68272-003	9-53
68272-003	10-33
68272-004	9-9f
68272-004	9-56
68272-004	10-36
68273-000	9-54
68273-002	9-9c
68273-002	9-54
68273-002	10-34
68274-000	9-47
68276-000	9-25
68276-000	10-14
68276-001	9-25
68276-001	10-14
68277-000	9-23
68277-000	10-13
68278-000	9-26
68278-000	10-16
68279-000	9-34
68279-000	10-39
68279-004	10-39
68281-000	9-27
68281-000	10-18
68281-001	9-27
68281-001	10-18
68282-000	9-24
68282-000	10-15
68282-001	9-24
68282-001	10-15
68283-000	9-29
68283-000	10-40
68283-001	9-29
68283-001	10-40
68285-000	9-30
68286-000	9-31
68286-000	10-47
68288-000	8-12
68289-000	9-49
68290-002	9-33
68290-002	10-58
68290-003	9-33
68290-003	10-58
68290-004	9-32
68290-004	10-57
68290-005	9-42
68290-005	10-59
68290-006	9-42
68290-006	10-59
68292-000	16-24
68292-002	16-24
68293-000	16-25
68293-000	17-21
68293-002	18-25
68294-000	16-26
68294-000	17-22
68295-000	16-27
68296-000	16-28
68296-000	17-24
68297-000	16-29
68297-000	17-25
68297-000	18-30
68297-001	16-30
68297-001	17-26
68297-001	18-34
68298-000	16-31
68299-000	16-32
68299-000	17-28
68300-000	16-33
68300-000	17-29
68300-000	18-35
68301-000	16-34
68301-000	17-30
68301-000	18-37
68302-000	16-35
68303-000	16-36
68303-000	17-32
68303-000	18-38
68304-000	16-13
68304-002	16-14
68305-000	16-21
68305-000	17-2
68305-001	16-21
68305-001	17-2
68305-002	16-21
68305-002	17-2
68305-003	16-21
68305-003	17-2
68306-000	16-22
68306-000	17-3
68306-000	18-13
68306-002	16-22
68306-002	17-3
68306-002	18-13
68306-003	18-13
68306-004	18-13
68307-000	11-40
68308-000	11-39
68311-000	8-14
68311-000	11-1
68311-005	8-15
68311-006	8-14
68311-006	11-1
68311-007	8-14
68311-007	11-1
68312-000	11-21
68313-000	11-22
68314-000	11-23
68314-001	10-23
68315-000	11-49
68315-001	11-49
68316-000	11-24
68316-002	11-25
68316-003	11-25
68316-014	11-25
68316-015	11-25
68316-016	11-24
68316-017	11-24
68318-000	8-16
68319-000	11-80
68320-000	11-26
68320-002	11-26

Part Number	Figure and Index No.
68320-003	11-26
68322-000	11-60
68323-000	11-51
68323-001	11-51
68324-000	11-52
68325-000	11-27
68325-002	11-27
68326-000	11-30
68327-000	11-29
68328-000	11-54
68328-002	11-54
68329-000	8-18
68330-000	11-55
68330-003	11-55
68330-006	11-55
68331-000	11-28
68331-001	11-28
68332-000	11-56
68333-000	11-35
68333-001	11-35
68334-000	11-83
68335-000	11-36
68336-000	11-37
68336-001	11-37
68338-000	11-57
68339-000	11-58
68340-000	11-62
68341-000	11-63
68342-004	11-38
68342-005	11-38
68342-010	11-38
68342-011	11-38
68343-000	11-63
68343-002	11-63
68344-000	11-53
68345-000	11-19
68346-001	11-61
68347-000	11-50
68348-000	8-18
68349-000	11-59
68351-000	11-62
68352-001	11-10
68352-003	11-10
68353-000	11-17
68353-000	12-9
68355-000	8-22
68355-000	12-1
68355-004	8-39
68355-007	8-22
68355-007	12-1
68355-008	8-22
68355-008	12-1
68357-000	12-2
68357-001	12-2
68358-000	12-3
68359-000	12-4
68360-002	12-5
68360-003	14-28
68362-000	11-71
68363-000	11-70
68364-000	11-5
68364-000	11-65
68364-000	12-20
68364-000	12-24
68365-002	12-6
68365-003	12-7
68366-000	12-8
68369-000	12-33
68369-001	12-33
68370-000	12-11
68370-001	12-11
68371-000	12-12
68371-001	12-12
68372-000	12-13
68373-000	12-14
68373-001	12-14
68374-000	12-15
68375-000	12-10
68377-000	8-41
68378-000	12-22
68381-000	11-61
68382-000	11-9
68382-002	11-9
68387-000	9-4
68387-002	9-4
68394-000	20-58
68401-000	24-11
68401-009	24-11
68404-000	24-6
68406-000	33-33
68406-002	33-33
68406-003	33-33
68406-004	33-33
68407-000	33-38
68407-002	33-38
68410-000	33-41
68412-000	26-10
68413-000	26-11
68414-000	94-2
68414-003	94-2
68415-000	24-38
68416-000	24-41
68416-001	24-41
68420-002	24-3
68420-003	24-3
68420-004	24-3
68421-002	24-4
68421-003	24-4
68421-004	24-4
68421-008	24-4
68421-010	24-4
68424-000	24-37
68426-000	45-1
68426-000	46-1
68426-002	45-1
68426-002	46-1
68427-000	46-10
68428-000	46-11
68429-000	46-6
68429-001	46-6
68429-002	46-6
68429-003	46-6
68430-000	46-7
68430-001	46-7
68430-002	46-7
68430-003	46-7
68431-000	46-8
68431-001	46-8
68439-002	26-3
68439-003	26-3
68439-004	26-3
68439-005	26-3
68439-006	26-3
68439-007	26-3
68439-008	26-3
68439-009	26-3
68439-010	26-3
68439-011	26-3
68439-012	26-3
68439-013	26-3
68440-000	111-23
68441-000	111-19
68443-000	26-4
68443-002	26-4
68445-000	26-5
68445-002	26-5
68449-003	24-55
68451-000	93-1
68452-000	93-2
68453-000	92-36
68454-000	92-37
68455-000	92-38
68456-002	24-57
68456-003	24-57
68456-004	24-57
68456-005	24-57
68457-002	24-58
68457-003	24-58
68457-004	24-58
68457-005	24-58
68458-002	20-59
68458-003	20-59
68458-004	20-59
68458-005	20-59
68459-002	24-59
68459-003	24-59
68459-004	24-59
68459-005	24-59
68460-002	24-60
68460-003	24-60
68460-004	24-60
68460-005	24-60
68462-000	60-25
68463-000	60-27
68464-000	60-52
68466-000	60-30
68467-000	60-29
68468-000	60-24
68469-002	19-46
68469-003	19-46
68469-004	19-46
68469-005	19-46
68469-005	19-48
68470-000	92-18
68472-000	94-20
68473-002	24-61
68473-003	24-61
68473-004	24-61
68473-005	24-61
68474-000	94-14
68475-000	94-10
68476-002	24-62
68476-003	24-62
68476-004	24-62
68476-005	24-62
68477-000	94-17
68478-000	94-16
68479-000	94-19
68480-000	94-18
68484-000	20-60
68484-000	24-64
68484-001	19-47
68484-001	24-64
68484-002	24-64
68485-000	94-4
68486-000	94-6
68488-000	94-5
68488-002	94-5
68491-000	94-49
68492-002	24-65
68492-003	24-65
68492-005	19-48

Part Number	Figure and Index No.
68492-005	20-61
68492-006	24-65
68492-007	24-65
68492-009	19-48
68492-009	20-61
68492-010	24-65
68492-011	24-65
68492-013	19-48
68492-013	20-61
68492-014	20-61
68492-014	24-65
68492-016	24-65
68494-000	33-36
68494-000	123-18
68495-000	24-23
68499-004	24-43
68499-005	24-43
68500-000	8-24
68500-002	8-24
68500-003	8-24
68500-004	8-24
68500-005	8-24
68500-006	8-24
68500-007	8-24
68500-008	8-24
68500-009	8-24
68500-010	8-24
68500-011	8-24
68501-000	8-25
68501-000	13-1
68501-003	8-27
68501-004	8-28
68501-005	13-6
68501-006	13-12
68501-007	13-2
68502-000	13-7
68502-001	13-13
68503-000	13-11
68503-001	13-17
68504-000	13-18
68504-001	13-18
68505-000	13-3
68506-000	13-5
68507-000	13-22
68507-001	13-22
68508-001	13-19
68508-002	13-19
68509-000	13-35
68509-001	13-35
68509-002	13-35
68509-003	13-35
68511-000	13-37
68511-001	13-37

Part Number	Figure and Index No.
68512-000	13-38
68512-001	13-38
68513-000	13-39
68513-004	13-39
68513-006	13-39
68513-008	13-39
68514-000	13-42
68515-000	13-43
68522-000	13-40
68523-000	13-41
68524-000	13-47
68525-000	13-64
68528-000	13-27
68528-001	13-27
68529-000	13-49
68531-000	13-77
68532-000	25-14
68532-002	25-14
68533-000	13-30
68533-001	13-30
68534-000	13-26
68534-001	13-26
68534-002	13-26
68534-003	13-26
68536-000	13-52
68536-001	13-52
68537-000	13-34
68538-000	13-31
68539-000	13-20
68540-000	13-21
68540-001	13-21
68542-000	13-53
68543-000	13-54
68545-000	26-1
68545-002	26-1
68546-000	26-2
68546-002	26-2
68547-002	24-63
68547-003	24-63
68547-004	22-18
68547-004	23-26
68547-005	22-19
68550-000	33-40
68551-000	25-21
68555-002	19-54
68555-002	123-4
68555-005	19-54
68555-005	19A-59
68555-005	20-82
68555-005	124-3
68555-005	124-6
68556-000	24-41
68556-001	24-41

Part Number	Figure and Index No.
68557-000	96-37
68559-000	96-31
68562-000	13-46
68564-000	13-47
68569-000	13-24
68571-000	13-44
68574-002	24-44
68574-003	24-44
68574-004	24-44
68574-005	24-44
68574-006	24-44
68574-007	24-44
68574-008	24-44
68574-009	24-44
68574-010	24-44
68574-011	24-44
68574-012	24-44
68574-013	24-44
68580-000	24-30
68583-000	24-30
68583-000	24-31
68586-002	25-1
68586-003	25-1
68586-004	25-1
68586-005	25-1
68586-006	25-1
68586-007	25-1
68586-008	25-1
68586-009	25-1
68586-010	25-1
68586-011	25-1
68586-012	25-1
68586-013	25-1
68586-014	25-1
68586-015	25-1
68586-016	25-1
68586-017	25-1
68586-018	25-1
68586-019	25-1
68586-020	25-1
68586-021	25-1
68587-002	25-2
68587-003	25-2
68587-004	25-2
68587-005	25-2
68587-006	25-2
68587-007	25-2
68587-008	25-2
68587-009	25-2
68587-010	25-2
68587-011	25-2
68587-012	25-2
68587-013	25-2

Part Number	Figure and Index No.
68587-014	25-2
68587-015	25-2
68587-016	25-2
68587-017	25-2
68587-018	25-2
68587-019	25-2
68587-020	25-2
68587-021	25-2
68588-002	25-5
68588-003	25-5
68588-004	25-5
68588-005	25-5
68588-006	25-5
68588-007	25-5
68588-008	25-5
68588-009	25-5
68590-002	25-15
68590-003	25-15
68590-004	25-15
68590-005	25-15
68590-006	25-15
68590-007	25-15
68590-008	25-15
68590-009	25-15
68590-010	25-15
68590-011	25-15
68592-002	25-6
68592-003	25-6
68592-004	25-6
68592-005	25-6
68592-006	25-6
68592-007	25-6
68592-008	25-6
68592-009	25-6
68592-010	25-6
68592-011	25-6
68593-002	25-11
68593-003	25-11
68593-004	25-11
68593-005	25-11
68593-006	25-11
68593-007	25-11
68593-008	25-11
68593-009	25-11
68593-010	25-11
68593-011	25-11
68593-012	25-11
68593-013	25-11
68593-014	25-11
68593-015	25-11
68593-016	25-11
68593-017	25-11
68593-018	25-11

Part Number	Figure and Index No.
68593-019	25-11
68593-020	25-11
68593-021	25-11
68595-002	25-8
68595-003	25-8
68595-004	25-8
68595-005	25-8
68595-006	25-8
68595-007	25-8
68595-008	25-8
68595-009	25-8
68595-010	25-8
68595-011	25-8
68595-012	25-8
68595-013	25-8
68595-014	25-8
68595-015	25-8
68595-016	25-8
68595-017	25-8
68595-018	25-8
68595-019	25-8
68595-020	25-8
68595-021	25-8
68596-002	25-10
68596-003	25-10
68596-004	25-10
68596-005	25-10
68596-006	25-10
68596-007	25-10
68596-008	25-10
68596-009	25-10
68596-010	25-10
68596-011	25-10
68596-012	25-10
68596-013	25-10
68596-014	25-10
68596-015	25-10
68596-016	25-10
68596-017	25-10
68596-018	25-10
68596-019	25-10
68596-020	25-10
68596-021	25-10
68597-002	25-12
68597-003	25-12
68597-004	25-12
68597-005	25-12
68597-006	25-12
68597-007	25-12
68597-008	25-12
68597-009	25-12
68597-010	25-12
68597-011	25-12
68597-012	25-12
68597-013	25-12
68597-014	25-12
68597-015	25-12
68597-016	25-12
68597-017	25-12
68597-018	25-12
68597-019	25-12
68597-020	25-12
68597-021	25-12
68598-002	25-9
68598-003	25-9
68598-004	25-9
68598-005	25-9
68598-006	25-9
68598-007	25-9
68598-008	25-9
68598-009	25-9
68599-002	25-13
68599-003	25-13
68599-004	25-13
68599-005	25-13
68599-006	25-13
68599-007	25-13
68599-008	25-13
68599-009	25-13
68599-010	25-13
68599-011	25-13
68600-002	25-7
68600-003	25-7
68600-004	25-7
68600-005	25-7
68600-006	25-7
68600-007	25-7
68600-008	25-7
68600-009	25-7
68600-010	25-7
68600-011	25-7
68600-012	25-7
68600-013	25-7
68600-014	25-7
68600-015	25-7
68600-016	25-7
68600-017	25-7
68600-018	25-7
68600-019	25-7
68600-020	25-7
68600-021	25-7
68601-000	8-32
68601-000	14-1
68601-005	8-32
68601-005	14-1
68601-009	8-32
68601-009	14-1
68601-010	8-32
68601-010	14-1
68602-000	8-35
68602-001	8-35
68603-000	14-5
68604-000	14-6
68604-004	14-6
68605-000	14-7
68605-001	14-7
68606-000	14-8
68606-001	14-8
68607-000	14-10
68607-003	14-10
68608-000	14-42
68608-001	14-42
68609-000	14-13
68609-001	14-13
68610-000	24-18
68611-000	25-26
68612-000	14-15
68613-000	25-27
68616-000	14-19
68617-000	14-22
68618-000	14-23
68619-000	14-24
68619-001	14-24
68620-000	14-25
68621-000	14-26
68621-001	14-26
68621-002	14-26
68624-000	14-27
68625-000	14-45
68625-001	14-45
68625-002	14-45
68625-003	14-45
68629-000	14-39
68631-000	14-29
68632-000	14-30
68632-001	14-30
68633-005	24-35
68633-006	24-35
68633-007	24-35
68633-009	24-35
68633-011	25-24
68634-000	14-9
68634-001	14-9
68637-000	14-31
68637-001	14-31
68638-001	14-32
68638-002	14-32
68639-000	14-33
68640-000	14-34
68640-001	14-34
68640-002	14-34
68640-003	14-34
68641-000	14-35
68641-001	14-35
68642-000	14-36
68642-001	14-36
68643-000	14-37
68643-001	14-37
68644-000	14-38
68645-000	14-50
68646-000	24-32
68646-002	24-32
68647-000	14-41
68647-001	14-41
68649-000	14-11
68649-003	14-11
68651-000	14-43
68651-001	14-43
68652-000	14-44
68653-000	14-17
68653-001	14-17
68654-000	14-46
68654-001	14-46
68655-000	14-12
68655-002	14-12
68656-000	14-40
68657-000	14-5
68660-002	25-25
68660-003	25-25
68660-004	25-25
68660-005	25-25
68660-006	25-25
68660-007	25-25
68660-008	25-25
68660-009	25-25
68660-010	25-25
68660-011	25-25
68661-000	25-23
68662-000	24-33
68662-003	24-33
68663-010	25-24
68664-002	25-24
68664-003	25-24
68664-004	25-24
68664-005	25-24
68664-006	25-24
68664-007	25-24
68664-008	25-24
68664-009	25-24
68667-000	25-22
68671-000	24-42
68674-000	113-9

Part Number	Figure and Index No.
68674-000	118-33
68676-000	113-10
68676-000	118-34
68677-000	14-18
68678-000	14-49
68680-000	15-14
68687-003	24-7
68687-004	24-7
68687-006	24-8
68687-007	24-8
68688-000	16-41
68688-001	16-41
68688-002	16-41
68688-003	16-41
68688-004	16-41
68688-004	17-16
68688-004	18-19
68688-005	16-41
68688-005	17-16
68688-005	18-19
68689-000	16-38
68689-002	16-38
68690-000	16-39
68690-002	16-39
68690-003	16-39
68691-000	16-39
68691-002	16-39
68691-006	16-39
68692-000	16-40
68692-002	16-40
68698-000	98-12
68699-000	9-78
68699-000	10-53
68699-008	77-12
68699-008	80-14
68699-008	83-14
68699-009	77-13
68699-014	77-12
68699-014	78-14
68699-014	80-14
68699-014	81-16
68699-014	83-14
68706-000	76-5
68708-000	24-81
68708-001	24-81
68710-000	48-14
68710-000	66-1
68710-000	67-1
68710-000	67A-1
68717-000	69-4
68718-000	69-5
68724-000	69-6
68731-000	16-38
68731-002	16-38
68732-000	16-42
68732-002	16-42
68733-002	24-44
68733-003	24-44
68733-004	24-44
68735-000	66-16
68736-002	24-98
68736-003	24-98
68736-004	24-98
68739-000	11-2
68739-000	94-4
68740-000	76-34
68746-000	72-1
68748-000	72-6
68750-000	72-8
68752-000	72-10
68754-000	72-7
68756-000	72-9
68757-000	72-11
68759-000	72-2
68761-000	86-25
68762-000	86-22
68763-000	89-41
68763-000	90-23
68764-000	86-16
68764-000	88-49
68765-000	86-17
68765-000	88-45
68765-002	86-17
68765-002	88-45
68766-000	86-18
68768-000	86-17
68769-000	86-16
68770-000	85-23
68770-002	76-9
68770-002	79-28
68770-003	66-27
68770-003	67-38
68770-004	87-24
68770-004	98-24
68770-004	99-24
68770-005	98-23
68770-006	66-26
68770-006	77-34
68770-006	78-34
68770-006	79-27
68770-006	80-42
68770-006	81-58
68770-006	82-29
68770-006	83-31
68770-007	79-21
68770-007	82-27
68770-012	78-35
68770-012	80-43
68770-012	81-60
68770-012	83-32
68770-014	38-51
68770-014	39-15
68770-014	77-35
68770-017	85-24
68770-018	66-26
68770-018	76-8
68770-018	79-22
68771-000	85-23
68771-002	76-13
68771-002	79-26
68771-003	66-22
68771-003	67-29
68771-004	87-25
68771-004	98-26
68771-004	99-25
68771-005	98-25
68771-006	66-24
68771-006	76-11
68771-006	79-25
68771-008	66-24
68771-008	77-32
68771-008	78-32
68771-008	80-40
68771-008	81-59
68771-008	83-34
68771-010	78-33
68771-010	80-41
68771-010	81-57
68771-010	83-33
68773-000	85-17
68773-000	87-9
68774-000	85-18
68777-000	66-17
68777-000	67-26
68778-000	66-28
68778-000	67-30
68778-000	67A-30
68778-000	68-63
68780-004	75-1
68780-005	74-1
68780-006	74-1
68781-000	74-16
68781-002	74-16
68786-000	74-25
68787-000	74-7
68789-000	86-18
68793-000	70-1
68796-000	70-3
68798-000	70-4
68798-003	70-4
68799-000	70-2
68799-002	70-2
68802-000	102-1
68803-000	21-26
68803-000	124-7
68803-003	123-5
68804-003	98-1
68804-003	99-1
68807-004	102-29
68807-005	98-52
68807-018	98-53
68808-000	100-10
68809-000	33-10
68812-003	101-49
68812-004	101-7
68817-035	5-56
68819-002	74-11
68819-003	74-16
68821-000	114-9
68821-000	123-32
68822-000	33-49
68822-000	116-27
68822-000	117-15
68822-000	118-38
68823-000	33-49
68824-000	114-11
68825-000	114-10
68825-000	123-33
68828-000	96-2g
68829-000	96-2h
68830-000	73-12
68831-000	73-11
68832-000	73-10
68833-000	73-9
68833-005	73-9
68834-000	73-8
68835-000	73-7
68836-000	100-14
68838-000	33-37
68841-000	118-36
68851-000	33-43
68851-000	33-44
68852-000	33-43
68853-000	33-43
68863-000	9-83
68867-000	33-43
68870-002	118-22
68876-000	111-18
68876-000	112-1
68902-000	38-3
68903-000	38-1
68904-000	38-27

Part Number	Figure and Index No.
68904-000	39-72
68905-000	38-2
68906-000	38-6
68906-009	38-6
68907-000	38-4
68908-000	38-7
68908-000	39-3
68909-000	38-5
68910-000	38-17
68911-000	81-44
68913-000	111-14
68913-002	111-11
68913-002	111-14
68916-000	38-38
68918-000	38-42
68918-000	39-33
68919-000	38-37
68919-000	39-31
68920-000	38-43
68921-000	13-45
68922-000	38-36
68923-000	38-31
68923-000	39-46
68923-001	38-31
68923-001	39-46
68923-002	38-32
68923-002	39-47
68923-003	38-32
68923-003	39-47
68923-004	38-33
68923-004	39-48
68923-005	38-33
68923-005	39-48
68923-006	38-34
68923-006	39-49
68923-007	38-34
68923-007	39-49
68924-000	38-79
68924-001	38-79
68926-000	112-2
68927-000	38-78
68927-001	38-78
68928-000	38-64
68928-000	39-58
68929-000	38-65
68929-000	39-60
68933-000	38-63
68933-000	39-57
68941-000	111-18
68941-000	112-1
68950-000	8-25
68950-000	13-1
68950-003	8-25
68950-003	13-1
68950-004	8-25
68950-004	13-1
68953-000	22-2
68963-000	22-8
68963-000	23-7
68964-000	22-12
68964-000	23-11
68966-000	12-19
68967-000	12-25
68969-003	24-55
68969-005	24-55
68970-000	12-37
68971-000	12-30
68972-000	14-47
68974-000	12-26
68975-000	14-48
68976-000	22-3
68976-000	23-2
68978-000	22-6
68978-000	23-5
68980-000	22-5
68980-000	23-4
68981-000	22-7
68981-000	23-6
68984-000	12-2
68985-000	12-36
68986-002	12-31
68986-003	12-31
68991-000	15-31
68993-000	24-87
68998-000	22-15
68998-003	22-15
68999-004	22-1
68999-005	22-26
68999-007	22-1
68999-008	22-6
68999-008	23-32
68999-009	22-1
68999-011	22-1
68999-012	22-1
68999-013	22-1
69001-000	79-9
69004-000	67-27
69004-000	67A-27
69006-000	33-33
69006-002	33-33
69007-000	33-36
69007-000	123-18
69011-000	65-82
69011-000	77-25
69011-000	78-25
69011-000	79-17
69011-000	80-29
69011-000	81-45
69011-002	79-18
69012-000	65-84
69012-000	77-26
69012-000	78-26
69012-000	79-16
69012-000	79-19
69012-000	80-30
69012-000	81-46
69013-000	87-7
69013-003	87-7
69015-002	67-25
69015-002	67A-25
69015-002	68-32
69015-003	79-7
69015-004	67-25
69015-004	67A-25
69015-004	68-32
69015-004	68-71
69015-004	87-5
69015-004	87-5a
69015-008	80-34
69015-008	81-35
69015-041	89-36
69015-042	89-39
69016-000	118-42
69017-002	67-59
69018-000	67-37
69019-002	67-41
69019-003	67-42
69021-000	87-20
69022-000	38-2
69023-000	38-5
69024-000	67-28
69024-000	67A-28
69029-000	8-25
69029-000	13-1
69029-003	8-25
69029-003	13-1
69029-004	8-25
69029-004	13-1
69032-000	88-59
69032-000	89-19
69033-000	87-12
69036-000	87-6
69037-000	86-18
69038-000	86-16
69038-000	88-47
69039-000	86-17
69039-000	88-43
69041-005	37-1
69042-000	37-25
69042-002	37-25
69043-000	118-37
69044-000	87-8
69049-000	88-50
69050-004	98-10
69050-004	99-15
69051-000	33-10
69053-000	33-50
69057-002	22-17
69057-003	22-17
69057-004	22-17
69057-005	22-17
69062-000	13-33
69066-000	32-2a
69067-000	32-4a
69067-009	32-4a
69067-010	32-4a
69068-002	32-1
69068-003	32-4
69068-004	32-2
69068-006	32-1
69068-007	32-2
69068-008	32-1
69068-009	32-2
69068-010	32-4
69068-011	32-1
69068-012	32-2
69068-013	32-4
69068-016	32-4
69068-017	32-2
69068-018	32-1
69069-000	118-43
69071-000	118-44
69074-000	67-66
69077-000	96-9
69080-000	33-51
69084-000	33-39
69084-000	123-19
69085-000	29-1
69085-001	29-1
69085-002	29-16
69085-003	29-2
69085-004	29-2
69086-000	24-95
69086-000	123-12
69086-000	124-15
69087-000	57-16
69087-001	57-16
69088-000	86-45
69088-000	88-13
69088-005	86-45
69088-005	88-13
69088-005	89-12

Part Number	Figure and Index No.
69090-002	24-93
69090-003	24-93
69090-004	24-93
69090-005	24-93
69091-002	24-94
69091-003	24-94
69091-004	24-94
69091-009	24-94
69092-000	86-35
69092-000	88-1
69092-002	86-35
69092-002	88-1
69092-002	89-1
69093-000	86-48
69093-000	88-12
69093-002	86-48
69093-002	88-12
69093-003	89-11
69094-003	86-44
69094-003	88-10
69094-004	86-44
69094-004	88-10
69094-004	89-9
69095-000	86-47
69095-000	88-11
69097-000	24-89
69097-000	123-10
69098-000	39-51
69099-000	24-6
69101-000	8-1
69101-002	8-1
69101-003	8-1
69101-004	8-1
69101-005	8-1
69101-006	8-1
69101-008	8-1
69101-009	8-1
69101-010	8-1
69101-011	8-1
69101-012	8-1
69101-013	8-1
69101-014	8-1
69101-015	8-1
69101-018	8-1
69101-019	8-1
69102-000	8-3
69102-002	8-3
69103-003	8-4
69103-004	8-4
69103-005	8-4
69103-006	8-4
69103-007	8-4
69103-008	8-4
69103-009	8-4
69103-010	8-4
69103-011	8-4
69103-012	8-4
69103-013	8-4
69103-014	8-4
69103-017	8-4
69103-018	8-4
69104-000	8-22
69104-000	12-1
69104-002	8-22
69104-002	12-1
69104-003	8-22
69104-003	12-1
69104-005	8-22
69104-005	12-1
69105-002	12-6
69105-003	12-7
69106-000	15-14
69107-000	14-29
69112-000	22-4
69112-000	23-3
69116-000	9-60
69116-000	57-6
69117-000	57-5
69118-000	9-68
69119-000	74-32
69121-000	117-16
69126-000	57-4
69127-000	94-51
69130-000	74-16
69130-002	74-16
69131-000	9-70
69132-000	9-69
69134-000	57-2
69137-000	9-71
69139-000	9-64
69142-000	117-21
69143-000	57-3
69146-000	33-36
69146-000	123-18
69147-000	123-7
69148-000	123-6
69149-000	33-36
69149-000	123-18
69150-000	57-9
69152-000	9-63
69156-000	33-39
69156-000	123-19
69156-000	124-25
69159-000	74-13
69159-002	74-13
69161-000	118-61
69161-000	119-36
69162-000	118-62
69162-000	119-37
69163-000	118-63
69163-000	119-33
69164-003	33-35
69164-003	123-17
69166-000	86-21
69166-000	88-42
69166-001	86-21
69166-001	88-44
69169-000	33-52
69174-000	69-6
69175-000	69-4
69180-000	33-56
69180-000	123-20
69181-000	86-46
69181-000	88-14
69181-000	89-13
69184-000	86-19
69184-000	88-41
69188-003	24-37
69189-000	24-87
69192-000	24-85
69192-000	123-9
69192-000	124-12
69195-002	57-21
69195-003	57-22
69196-000	57-24
69196-001	57-24
69198-000	87-41
69198-000	87-41a
69198-002	87-41a
69201-000	87-40
69206-000	38-71
69207-000	38-68
69209-000	19-70
69209-000	20-76
69210-000	4-35
69211-000	3-19
69212-000	3-18
69213-000	3-21
69217-000	57-25
69219-000	16-6
69219-000	17-36
69219-000	18-50
69220-002	16-2
69220-002	17-17
69220-003	16-2
69220-003	17-17
69220-004	16-3
69220-004	17-18
69220-004	18-46
69220-005	16-3
69220-005	17-18
69220-005	18-46
69220-008	16-1
69220-008	17-1
69220-009	16-1
69220-009	17-1
69220-018	18-45
69220-019	18-45
69220-022	18-1
69220-023	18-1
69220-024	18-1
69220-025	18-1
69224-000	19-18
69224-000	20-5
69231-000	67-55
69231-000	67A-54
69231-000	68-47
69232-000	67-58
69232-000	67A-9
69232-000	68-30
69240-000	57-27
69240-002	57-28
69284-000	57-26
69285-000	38-43
69285-000	39-54
69290-000	72-5
69292-002	93-6
69296-000	41-3
69303-000	34-64
69306-000	9-4
69306-002	9-4
69306-003	9-4
69306-004	9-4
69306-005	9-4
69308-000	80-56
69308-000	81-39
69309-000	8-12
69309-002	8-12
69310-000	8-5
69310-000	9-1
69310-002	8-7
69310-003	8-7
69310-004	8-5
69310-004	9-1
69310-005	8-5
69310-005	9-1
69310-006	8-5
69310-006	9-1
69310-007	8-5
69310-007	9-1
69310-008	8-5
69310-008	9-1

Part Number	Figure and Index No.
69310-009	8-7
69310-010	8-5
69310-010	9-1
69310-011	8-5
69310-011	9-1
69310-012	8-7
69310-013	8-5
69310-013	9-1
69310-014	8-5
69310-014	9-1
69310-021	8-5
69310-021	9-1
69310-022	8-5
69310-022	9-1
69315-000	34-66
69319-000	77-10
69319-000	78-12
69319-000	80-12
69319-000	81-15
69319-000	83-12
69320-000	78-1
69320-000	80-1
69320-000	83-1
69320-001	77-1
69320-002	78-1
69320-002	80-1
69324-000	77-19
69324-000	80-20
69324-002	77-19
69324-002	78-38
69324-002	80-20
69324-003	81-27
69325-123	99-70
69325-124	99-71
69325-129	102-30
69325-130	102-29
69327-000	19-1
69327-002	19-1
69327-003	19-1
69327-004	19-1
69328-000	34-32
69329-000	34-33
69330-000	34-34
69330-002	34-34
69330-003	34-34
69335-000	34-35
69336-002	34-59
69337-000	34-39
69338-002	34-40
69339-000	34-43
69341-000	24-97b
69341-000	124-81
69344-004	24-97
69344-005	24-97
69344-007	24-97
69344-008	24-97
69344-009	24-97
69344-010	24-97
69344-011	24-97
69344-013	24-97
69344-014	24-97
69344-015	24-97
69344-017	24-97
69344-022	24-97
69344-024	24-97
69344-028	24-97
69345-000	24-97b
69345-000	124-81
69346-000	101-6
69347-000	10-49
69347-003	10-49
69349-000	95-2
69351-000	101-5
69353-000	34-75
69353-000	124-25
69354-000	34-76
69354-000	124-26
69357-007	34-45
69357-008	34-45
69357-009	34-45
69357-010	34-45
69357-011	34-45
69357-014	34-45
69357-015	34-45
69357-017	34-45
69358-007	34-47
69358-008	34-47
69358-009	34-47
69358-010	34-47
69358-011	34-47
69358-012	34-47
69358-013	34-47
69358-014	34-47
69358-016	34-47
69358-019	34-47
69358-020	34-47
69358-021	34-47
69358-022	34-47
69358-024	34-47
69358-025	34-47
69359-007	24-99
69359-008	24-99
69359-009	24-99
69359-010	24-99
69359-011	24-99
69359-014	24-99
69359-015	24-99
69359-016	24-99
69359-017	24-99
69362-000	34-48
69362-000	124-34
69363-000	24-84
69363-000	24-96
69363-000	124-11
69364-000	34-41
69364-000	124-28
69365-000	34-42
69365-000	124-29
69368-000	24-6
69373-002	20-1
69373-010	20-1
69379-002	34-40
69397-000	34-45
69397-002	34-45
69397-003	34-45
69397-004	34-45
69397-005	34-45
69397-008	34-45
69397-009	34-45
69397-010	34-45
69398-000	34-35
69403-002	24-55
69403-003	24-56
69408-000	29-1
69408-001	29-1
69408-002	29-16
69408-003	29-2
69408-004	29-2
69408-005	29-1
69408-006	29-1
69408-007	29-16
69408-008	29-2
69408-009	29-2
69410-002	29-17
69410-003	29-23
69410-004	29-22
69410-004	29-28
69410-005	29-18
69410-006	29-24
69410-007	29-17
69410-008	29-23
69410-009	29-22
69410-009	29-28
69410-010	29-18
69410-011	29-24
69412-002	24-57
69412-003	24-57
69412-004	24-57
69412-005	24-57
69412-006	24-57
69413-002	24-58
69413-003	24-58
69413-004	24-58
69413-005	24-58
69413-006	24-58
69414-002	20-59
69414-003	20-59
69414-004	20-59
69414-005	20-59
69414-006	20-59
69414-007	20-59
69414-008	20-59
69414-009	20-59
69414-010	20-59
69414-011	20-59
69414-012	20-59
69415-002	24-59
69415-003	24-59
69415-004	24-59
69415-005	24-59
69415-006	24-59
69416-002	24-60
69416-003	24-60
69416-004	24-60
69416-005	24-60
69416-006	24-60
69417-002	19-46
69417-003	19-46
69417-004	19-46
69417-005	19-46
69417-006	19-46
69418-002	24-61
69418-003	24-61
69418-004	24-61
69418-005	24-61
69418-006	24-61
69419-002	24-62
69419-003	24-62
69419-004	24-62
69419-005	24-62
69419-006	24-62
69420-002	22-17
69420-003	22-17
69420-004	22-17
69420-005	22-17
69420-006	22-17
69421-006	25-3
69421-007	25-4
69427-002	124-73
69427-003	124-73
69427-004	124-73
69427-005	124-73

Part Number	Figure and Index No.
69428-000	24-31
69428-005	24-31
69429-000	24-30
69430-005	11-68
69430-005	11-69
69430-006	12-35
69430-007	12-34
69432-002	29-43
69432-003	29-43
69432-004	29-43
69432-005	29-43
69432-006	29-43
69434-000	80-57
69434-000	81-42
69436-000	8-3
69436-002	8-3
69436-003	8-3
69436-004	8-3
69436-005	8-3
69436-006	8-3
69436-007	8-3
69436-008	8-3
69437-000	8-3
69437-002	8-3
69437-003	8-3
69437-004	8-3
69437-005	8-3
69437-006	8-3
69437-007	8-3
69437-008	8-3
69437-009	8-3
69437-010	8-3
69437-011	8-3
69440-002	29-43
69440-003	29-43
69440-004	29-43
69440-005	29-43
69440-006	29-43
69440-007	29-43
69440-008	29-43
69440-009	29-43
69440-010	29-43
69440-011	29-43
69440-012	29-43
69440-013	29-43
69440-014	29-43
69440-015	29-43
69441-002	24-94
69441-003	24-94
69441-004	24-94
69441-005	24-94
69441-006	24-94
69441-007	24-94
69441-016	24-94
69441-017	24-94
69441-018	24-94
69441-019	24-94
69441-020	24-94
69441-022	24-94
69442-002	24-93
69442-003	24-93
69442-004	24-93
69442-005	24-93
69442-006	24-93
69442-007	24-93
69442-009	24-93
69445-000	26-7
69445-000	41-5
69446-000	26-7
69446-000	41-5
69449-000	26-6
69449-000	41-4
69452-000	79-11
69452-000	80-28
69453-000	16-24
69458-000	67-60
69459-000	67-14
69461-000	77-24
69461-000	78-39
69464-000	87-45
69466-000	9-2
69466-002	9-2
69466-003	9-2
69466-004	9-2
69466-005	9-2
69467-000	9-3
69467-002	9-3
69467-003	9-3
69472-000	34-58
69473-000	85-49
69473-000	87-44
69474-000	20-2
69475-000	10-50
69481-000	11-21
69481-002	11-21
69481-003	11-21
69483-000	11-23
69483-001	10-23
69484-000	34-41
69484-000	124-28
69485-000	78-7
69485-000	80-7
69485-000	81-4
69485-000	83-7
69489-000	86-47
69489-000	88-11
69489-000	89-10
69489-002	89-10
69491-000	9-19
69491-000	10-27
69492-000	10-29
69494-000	21-1
69494-007	21-24
69495-000	21-17
69501-000	29-6
69501-001	29-6
69501-002	29-6
69501-003	29-6
69504-000	85-31
69506-000	101-1
69509-000	117-20
69509-000	124-62
69518-000	34-47
69518-000	34-54
69518-004	34-54
69518-004	34-57
69518-006	34-54
69518-006	34-57
69518-006	34-57
69530-000	76-3
69530-002	79-5
69533-000	29-2a
69533-001	29-2a
69535-000	49-11
69537-000	49-8
69538-000	49-9
69540-002	48-38
69540-002	49-1
69540-003	49-28
69543-000	34-60
69544-000	34-50
69544-000	34-80
69544-000	124-36
69545-000	34-49
69545-000	34-81
69545-000	124-35
69546-000	78-45
69546-000	79-12
69546-000	80-26
69546-000	81-40
69546-000	82-11
69546-000	83-22
69547-000	37-6
69548-000	37-51
69553-000	8-1
69553-002	8-1
69553-003	8-1
69553-004	8-1
69554-000	2-2
69554-000	3-1
69554-001	2-2
69554-001	3-1
69555-002	2-1
69555-003	2-1
69556-000	38-6
69556-004	38-6
69556-006	39-67
69557-002	24-57
69557-003	24-57
69557-004	24-57
69557-005	24-57
69557-006	24-57
69557-007	24-57
69558-002	24-58
69558-003	24-58
69558-004	24-58
69558-005	24-58
69558-006	24-58
69558-007	24-58
69559-002	24-59
69559-003	24-59
69559-004	24-59
69559-005	24-59
69559-006	24-59
69559-007	24-59
69560-002	24-61
69560-003	24-61
69560-004	24-61
69560-005	24-61
69560-006	24-61
69560-007	24-61
69561-002	24-62
69561-003	24-62
69561-004	24-62
69561-005	24-62
69561-006	24-62
69561-007	24-62
69562-002	25-5
69562-003	25-5
69563-002	25-9
69563-003	25-9
69564-002	22-17
69564-003	22-17
69564-004	22-17
69564-005	22-17
69564-006	22-17
69564-007	22-17
69568-002	30-1
69568-003	30-1
69568-006	30-3
69568-007	30-3
69569-000	34-67

Part Number	Figure and Index No.
69570-000	34-68
69571-002	34-51
69571-003	34-51
69571-004	34-51
69571-005	34-51
69571-006	34-51
69571-007	34-51
69576-000	124-69
69582-002	24-60
69582-003	24-60
69582-004	24-60
69582-005	24-60
69582-006	24-60
69582-007	24-60
69583-002	19-46
69583-003	19-46
69583-004	19-46
69583-005	19-46
69583-006	19-46
69583-007	19-46
69588-000	24-100
69588-000	124-13
69592-002	25-14
69592-003	25-14
69596-002	24-4
69596-003	24-4
69596-005	24-4
69596-006	24-4
69596-012	24-4
69596-014	24-4
69598-002	29-43
69598-003	29-43
69598-004	29-43
69598-005	29-43
69598-006	29-43
69598-007	29-43
69605-000	43-17
69615-000	34-43
69615-003	34-43
69616-000	34-44a
69616-000	124-32
69618-000	43-18
69619-000	43-21
69619-002	43-21
69619-003	43-21
69624-002	45-11a
69627-008	34-47
69627-009	34-47
69627-010	34-47
69627-011	34-47
69627-012	34-47
69627-013	34-47
69627-014	34-47
69627-015	34-47
69627-016	34-47
69627-017	34-47
69627-018	34-47
69627-019	34-47
69631-000	124-73
69631-002	124-73
69636-002	25-28
69636-003	25-28
69636-004	25-28
69636-005	25-28
69636-006	25-28
69637-000	34-41
69637-000	124-28
69638-000	34-41
69638-000	124 -28
69639-000	34-42
69639-000	124-29
69639-002	34-42
69639-002	124-29
69642-000	17-23
69642-000	18-28
69643-000	17-27
69643-000	18-32
69644-000	17-31
69644-000	18-36
69645-000	17-20
69648-000	109-9
69649-000	34-41
69649-000	124-28
69652-004	24-93
69652-010	24-93
69652-011	24-93
69652-012	24-93
69653-000	24-107
69653-000	124-15
69654-002	24-94
69654-003	24-94
69654-004	24-94
69654-005	24-94
69654-006	24-94
69654-007	24-94
69654-008	24-94
69654-009	24-94
69654-019	24-94
69659-000	34-39
69661-000	34-35
69664-000	34-75
69664-000	124-25
69665-000	34-76
69665-000	124-76
69669-013	29-16f
69669-013	31-3a
69669-014	29-16f
69669-014	31-3b
69669-015	110-12
69669-015	123-30
69669-015	124-58
69669-021	34-79
69669-021	124-34
69669-025	34-44b
69669-025	124-33
69669-035	55-51
69669-035	124-46
69669-037	34-75
69669-037	124-25
69669-039	124-27
69669-040	119-41
69669-040	119A-35
69669-040	124-63
69669-044	24-97c
69669-044	124-81
69669-052	34-77
69669-052	124-38
69669-066	110-12
69669-066	110A-8
69669-066	123-30
69669-066	124-58
69669-071	34-74
69669-071	124-37
69669-072	34-76
69669-073	34-76
69669-073	124-26
69669-082	124-49
69669-083	34-75
69669-083	124-25
69669-084	24-108
69669-084	124-16
69669-085	24-110
69669-085	124-18
69669-086	24-100
69669-086	124-13
69669-087	24-107
69669-087	124-15
69669-088	55-51
69669-088	124-46
69669-089	51-50
69669-089	124-43
69669-091	34-74
69669-091	124-37
69669-093	101-47
69669-093	124-56
69669-095	120-9
69669-095	124-66
69669-096	120-10
69669-096	124-67
69669-097	120-8
69669-097	124-65
69669-107	110-15
69669-107	124-58
69669-110	29-60
69669-110	123-14
69669-110	124-21
69669-114	120-11
69669-114	124-77
69669-117	19A-55
69669-117	124-4
69669-118	19A-56
69669-118	124-5
69669-125	34-42
69669-125	124-29
69669-126	34-42
69669-126	124-29
69669-133	34-74
69669-133	124-37
69669-136	34-75
69669-136	124-25
69669-137	34-75
69669-137	124-25
69669-141	18-60
69669-141	124-2
69669-146	24-100
69669-146	124-13
69669-148	24-34
69669-148	124-9
69669-172	34-77
69669-172	124-38
69669-173	104-3
69669-173	105-3
69669-173	123-29
69669-173	124-57
69669-175	34-78
69669-175	124-39
69669-181	34-83
69669-181	124-40
69669-184	24-115
69669-184	124-20
69670-000	103-1
69670-003	103-1
69670-004	103-1
69673-002	24-94
69673-003	24-94
69673-004	24-94
69673-005	24-94
69675-000	69-3
69676-000	34-70
69677-000	69-11
69678-000	34-44a
69678-000	124-32

Part Number	Figure and Index No.
69678-002	34-44a
69678-002	124-32
69683-000	124-69
69691-000	8-16
69692-000	8-18
69694-000	8-16
69695-000	8-18
69696-000	8-41
69697-000	11-4
69698-000	11-3
69698-001	11-3
69700-000	18-26
69701-000	18-27
69701-001	18-31
69702-000	8-3
69702-002	8-3
69702-005	8-3
69702-006	8-3
69703-000	8-14
69703-000	11-1
69704-000	18-11
69704-002	18-11
69704-003	18-11
69704-004	18-11
69705-000	18-12
69705-002	18-12
69705-003	18-12
69705-004	18-12
69706-000	23-21
69706-002	23-21
69706-003	23-21
69706-004	23-21
69707-000	18-14
69707-002	18-14
69707-003	18-14
69707-004	18-14
69708-000	18-29
69709-000	18-24
69710-000	18-33
69712-000	18-3
69712-002	18-3
69712-003	18-3
69712-004	18-3
69713-000	18-2
69713-002	18-2
69713-003	18-2
69713-004	18-2
69714-000	18-40
69714-001	23-17
69715-000	18-42
69716-000	18-41
69717-000	18-39
69718-000	12-29
69719-000	12-28
69720-000	12-27
69721-000	23-20
69722-000	23-14
69723-000	23-15
69724-000	23-16
69725-000	23-18
69726-000	23-19
69735-005	89-14
69736-002	2-17
69738-000	11-42
69740-000	11-43
69740-002	11-43
69742-000	11-41
69746-000	43-17
69746-002	27-2
69746-012	27-2
69746-013	43-17
69746-015	43-17
69748-000	11-65
69748-000	27-9
69749-000	27-3
69749-004	27-3
69749-008	27-3
69750-000	43-18
69751-000	27-5
69751-006	27-5
69768-000	48-48
69770-005	48-38
69770-005	49-1
69770-006	49-28
69776-000	13-71
69776-001	13-71
69777-000	34-43
69780-008	34-47
69780-009	34-47
69780-010	34-47
69780-011	34-47
69780-012	34-47
69780-013	34-47
69780-014	34-47
69780-015	34-47
69780-016	34-47
69780-017	34-47
69780-018	34-47
69780-019	34-47
69785-000	91-13
69785-001	90-14
69790-000	74-19a
69790-000	75-19
69791-000	74-19
69791-000	75-18
69798-000	9-4
69798-000	10-31
69809-000	74-8
69809-000	75-8
69809-001	74-8
69809-001	75-8
69813-000	27-1
69816-002	34-35
69816-007	34-35
69817-000	34-45
69817-003	34-35
69831-000	34-43
69831-002	34-43
69831-005	34-43
69831-007	34-43
69831-009	34-43
69844-000	9-37
69844-001	9-37
69851-000	94-28
69853-000	21-1
69856-000	124-69
69857-000	124-69
69858-002	23-1
69859-003	23-23
69859-007	23-23
69874-005	121-10
69881-002	8-48
69881-003	8-49
69885-000	28-32
69885-002	28-33
69885-002	28-39
69885-003	28-34
69885-003	28-40
69885-012	28-38
69888-000	11-24
69890-000	8-1
69890-002	8-1
69890-003	8-1
69890-004	8-1
69890-005	8-1
69890-006	8-1
69890-903	8-3
69890-905	8-24
69890-906	8-25
69890-906	13-1
69890-907	8-32
69890-907	14-1
69890-908	8-4
69890-909	8-5
69890-909	9-1
69890-910	8-14
69890-910	11-1
69890-911	8-22
69890-911	12-1
69890-913	8-3
69890-915	8-24
69890-916	8-25
69890-916	13-1
69890-918	8-4
69890-919	8-5
69890-919	9-1
69890-923	8-3
69890-925	8-24
69890-926	8-25
69890-926	13-1
69891-002	11-6
69891-003	11-6
69891-004	11-6
69891-005	11-6
69891-006	11-6
69891-007	11-6
69891-008	11-6
69891-009	11-6
69895-002	8-7
69895-003	8-7
69895-900	8-7
69895-901	8-7
69896-000	8-28
69896-900	8-28
69896-902	8-28
69897-000	8-34
69897-900	8-34
69898-000	8-33
69898-900	8-33
69899-900	8-15
69901-002	34-47
69902-000	8-21
69902-090	8-21
69903-000	8-23
69903-900	8-23
69904-000	8-40
69904-900	8-40
69905-900	8-27
69906-000	8-26
69906-900	8-26
69907-000	8-37
69907-001	8-37
69907-900	8-37
69907-901	8-37
69908-000	8-6
69908-900	8-6
69908-901	8-6
69911-000	8-38
69911-900	8-38
69912-000	8-39
69912-900	8-39
69917-000	74-12

Part Number	Figure and Index No.
69917-000	75-12
69957-002	24-75
69958-002	24-75
69960-002	101-53
69971-002	12-34
69971-003	12-35
69975-002	24-1
69976-003	24-99
69989-002	27-2
69989-002	43-17
69989-003	27-2
69989-003	43-17
69990-002	43-18
69991-002	43-21
69992-002	28-37
70371-002	28-36
70371-002	38-47
70371-002	39-35
70371-002	76-14
70371-002	77-31
70371-002	78-31
70371-002	79-14
70371-002	80-39
70371-002	81-49
70371-003	28-36
70371-003	38-47a
70371-003	39-36
70371-003	76-20
70371-003	77-30
70371-003	78-30
70371-003	79-15
70371-003	80-38
70371-003	81-48
72091-000	90-8
76169-002	31-31
76172-003	31-19
76175-000	31-18
76175-002	29-7
76175-002	30-6
76175-003	29-7
76176-000	31-30
76176-002	29-61
76187-000	31-13
76221-000	24-83
76255-000	8-19
76308-000	28-2
76343-000	31-23
76347-001	31-20
76351-002	31-24
76351-003	31-25
76415-006	58-1
76445-000	31-48
76467-004	11-43a
76474-003	8-36
76474-903	8-36
76497-002	15-51
78012-000	11-48
78016-000	16-39
78033-000	53-5
78041-000	29-16e
78041-000	29-16k
78041-000	29-22b
78041-000	30-26
78041-000	31-3
78041-000	31-50
78041-002	29-28b
78041-003	29-16e
78041-008	29-16e
78041-008	31-3
78041-009	29-16e
78041-009	29-16k
78041-009	29-22b
78041-009	31-3
78041-010	29-28b
78044-000	29-47
78052-002	17-13
78052-003	17-14
78052-004	17-13
78052-009	17-13
78052-010	17-13
78054-002	24-77
78057-000	17-38
78057-000	18-21
78057-000	19-57
78057-000	20-84
78082-003	19-1
78082-004	19-44
78085-003	20-59a
78085-007	20-59a
78085-013	20-59a
78086-000	18-44
78086-000	20-42a
78108-000	32-1
78108-003	32-2
78108-004	32-4
78108-007	32-4
78108-008	32-1
78108-009	32-1
78108-010	32-4
78108-011	32-1
78108-012	32-1
78108-013	32-1
78108-014	32-1
78108-015	32-2
78108-016	32-4
78109-000	34-69
78109-004	34-69
78110-000	8-12
78110-002	8-12
78113-000	37-28
78114-000	34-58
78117-000	24-79
78118-000	24-80
78140-199	98-10
78159-000	5-55
78271-003	18-1
78271-004	18-1
78271-005	18-1
78271-006	18-1
78349-004	18-16
78349-008	18-17
78349-010	18-16
78349-011	18-18
78349-012	18-17
78349-014	18-15
78349-017	18-15
78361-000	31-26
78362-000	31-21
78362-001	31-21
78475-002	5-30
78475-003	5-30
78483-000	103-30
78587-000	24-78
78638-000	18-47
78729-002	96-1
78735-002	24-28
78738-004	53-2
78738-005	53-2
79009-000	122-10
79033-000	110-11
79035-000	28-15
79038-000	66-51
79038-000	67-69
79038-000	67A-66
79038-000	68-65
79040-000	19-36
79040-002	19-36
79071-000	49-7
79072-000	49-6
79125-000	24-91
79125-001	24-91
79127-000	19-38
79152-000	111-31
79152-002	111-31
79154-000	17-37
79154-000	18-51
79155-000	17-37
79155-000	18-51
79160-000	111-32
79162-000	11-12
79171-002	18-20
79171-013	18-20
79174-000	2-15
79174-004	2-16
79182-002	24-99
79192-000	28-1
79203-002	101-16
79205-000	101-44
79207-000	29-6a
79207-000	31-12a
79209-004	19-1
79209-011	19-44
79228-000	29-16c
79228-000	31-5
79229-000	31-27
79230-000	29-14b
79230-000	31-28
79234-000	11-17
79235-000	31-29
79236-005	25-3
79236-014	25-1
79236-015	25-1
79236-016	25-4
79236-017	25-2
79236-018	25-2
79236-019	25-8
79236-020	25-8
79236-021	25-10
79236-022	25-10
79236-023	25-12
79236-024	25-12
79236-025	25-13
79236-027	25-8
79236-028	25-8
79236-029	25-10
79236-030	25-10
79246-000	27-7
79246-001	27-7
79246-002	27-8
79246-004	27-7
79246-005	27-7
79246-006	27-8
79246-007	27-8
79251-000	29-15b
79251-000	31-32
79252-000	29-11
79252-000	31-33
79264-000	28-10
79267-000	15-29
79268-000	47-16
79270-000	28-28
79271-000	28-29

Part Number	Figure and Index No.
79272-000	15-10
79275-000	96-2
79276-000	96-1
79276-008	27-17
79276-009	27-17
79277-000	45-45
79277-001	45-45
79280-000	28-20
79281-000	28-17
79282-000	28-18
79284-000	28-22
79285-000	28-23
79286-000	28-16
79287-000	28-21
79290-000	28-3
79292-000	28-24
79296-011	18-48
79296-012	11-6
79296-013	11-6
79296-024	11-6
79296-025	11-6
79296-026	11-6
79296-027	11-6
79303-000	28-27
79314-000	34-61
79314-002	34-61
79315-000	124-76
79333-000	101-24
79337-016	29-16
79337-016	29-22
79337-016	29-28
79337-016	31-2
79337-017	29-16
79337-017	31-2
79337-018	29-46
79337-019	29-1
79337-020	29-1
79337-025	29-2
79337-026	29-2
79337-027	29-16
79337-027	29-22
79337-027	29-28
79337-027	31-2
79337-028	29-16
79337-028	31-2
79337-039	29-2
79337-040	29-2
79337-041	29-46
79337-045	29-1
79337-046	29-1
79349-000	78-4
79349-000	80-4
79366-000	34-16
79376-000	34-14
79376-000	34-19
79381-000	34-14a
79381-000	34-21a
79404-000	24-102
79405-000	9-73
79405-000	10-44
79412-010	98-47
79412-010	99-44
79413-002	98-48
79427-002	8-47
79430-000	63-26
79434-000	19-20
79434-000	20-7
79436-000	29-20
79436-000	29-26
79436-000	32-5
79440-000	24-103
79440-000	25-29
79440-002	24-26
79440-002	25-16
79442-000	29-14d
79442-000	29-19
79442-000	29-25
79442-000	31-40
79445-000	24-12b
79445-000	24-70
79456-000	24-104
79463-000	110-16
79463-000	110B-8
79463-002	110A-7
79469-000	74-9
79469-000	75-11
79472-000	24-97a
79473-000	78-19a
79473-000	80-19a
79473-000	81-8
79475-005	19A-9
79475-007	19A-11
79475-008	19A-12
79475-009	19A-13
79475-034	19A-38
79475-048	19A-10
79475-055	19A-9
79475-056	19A-9
79475-057	19A-9
79479-002	29-23
79479-007	29-23
79479-008	29-24
79479-011	29-24
79479-012	29-23
79479-014	29-23
79479-015	29-24
79479-017	29-24
79515-003	19A-17
79515-005	19A-18
79515-007	19A-21
79515-008	19A-22
79515-013	19A-16
79515-015	19A-23
79515-035	19A-15
79530-002	19A-24
79532-002	19A-27
79534-000	119-35
79540-000	31-10
79540-001	31-10
79540-002	31-10
79540-003	31-10
79542-005	19A-6a
79542-014	19A-6
79542-015	19A-6
79543-002	53-40
79544-002	19A-7
79545-004	19A-1
79547-000	11-44
79547-002	8-17
79547-002	11-45
79547-003	11-45
79553-000	9-17
79553-000	10-22
79553-001	9-13
79553-001	10-22
79554-002	29-16h
79554-002	31-5a
79555-000	29-16a
79555-000	29-22a
79555-000	29-28a
79555-000	31-2a
79555-001	29-16a
79555-001	31-2a
79557-000	18-49
79558-002	42-10
79560-000	117-22
79561-003	8-19
79561-004	11-47
79561-005	11-15
79561-006	11-14
79561-007	11-32
79561-008	11-33
79561-901	11-13
79561-903	11-31
79562-000	18-23
79563-902	8-8
79563-907	8-10
79564-000	9-81
79564-000	10-38
79565-000	9-82
79565-000	10-37
79571-002	34-35
79571-004	34-35
79572-000	18-10
79583-002	14-17
79583-003	14-17
79584-008	42-8
79592-002	31-1
79592-003	31-1
79592-004	31-1
79592-005	31-1
79594-000	19-22
79594-000	20-9
79599-000	110B-9
79600-000	33-57
79600-000	34-73
79633-002	29-24a
79633-015	29-24a
79636-004	113-25
79636-004	119-74
79636-004	119A-57
79636-010	113-23
79639-002	11-20
79647-002	19A-34
79650-002	33-1b
79650-002	34-2b
79657-003	113-16
79681-002	24-21
79681-003	24-21
79688-000	124-71
79702-002	24A-6
79702-002	24A-10
79702-003	24A-12
79702-006	24A-8
79702-006	24A-14
79702-008	24A-7
79721-010	24A-1
79721-011	24A-1
79721-012	24A-2
79721-013	24A-2
79721-014	24A-3
79721-015	24A-3
79721-016	24A-4
79721-017	24A-4
79721-018	24A-5
79721-019	24A-5
79747-000	14-46
79747-001	14-46
79749-003	29-28d
79749-007	29-28e
79749-008	29-28f
79750-000	32B-2

Part Number	Figure and Index No.
79762-002	110A-5
79764-002	29-46
79764-004	29-46
79781-002	24-17a
79781-002	25-29
79792-002	31-21
79792-003	31-21
79800-002	55-3
79805-005	25-14
79818-002	29-2a
79818-003	29-2a
79827-003	25-14
79837-002	24-11
79839-003	43-24
79840-004	43-29
79863-000	38-72
79863-003	39-1
79868-003	124-72
79869-002	68-42
79883-003	21-27
79886-003	42-14
79886-004	42-15
79886-007	42-16
79886-011	42-13
79890-002	58A-11
79890-003	58A-11
79890-004	58A-12
79890-005	58A-12
79890-007	58A-13
79890-008	58A-13
79892-002	58A-18
79892-003	58A-18
79892-004	58A-19
79892-005	58A-19
79892-009	58A-20
79892-010	58A-20
80012-027	116-17
80022-067	38-48
80022-104	119-51
80032-069	85-21
80122-005	20-31
80122-088	51-39
80122-088	55-28
80122-089	55-26
80512-014	77-42
81262-068	19-23
81262-068	20-10
81342-013	92-85
81342-018	38-74
81342-018	39-37
81342-056	102-11
82695-123	19A-17
82695-123	19A-29
82732-013	85-26
82732-076	93-49
82732-076	96-28
82732-076	96-30
82732-095	50-62
82732-099	50-14
82732-099	50-16
83161-002	37-46
83161-003	37-53
83302-043	19-24
83302-043	20-11
85012-014	76-31
85012-014	78-53
85012-014	79-40
85012-014	80-49
85012-014	81-78
85012-040	94-21
85012-072	48-34
86062-056	48-2
86062-094	66-33
86062-094	67-35
86062-094	67A-35
86102-056	29-8
86700-007	68-37
86700-046	50-40
87319-002	50-8
87319-003	50-9
87319-004	50-10
87329-007	19A-52
87329-009	21-5
87329-011	20-22
87332-002	29-3
87332-002	30-4
87332-002	31-39
87366-002	33-13
87366-002	34-12
87369-022	124-84
87369-038	124-82
87369-039	124-60
87369-072	65-1a
87382-002	34-11
87391-002	33-14
87391-002	34-18
88416-002	Misc.-
89085-003	65-97
89085-005	65-96
89097-002	104-4
89097-004	104-4
89500-800	Misc.-
91193-000	76-15
95021-000	5-4b
95021-001	5-4b
95025-000	5-31
95025-001	5-31
95061-008	32B-31
95061-009	32B-12
95061-020	62-28
95061-054	92-83
95061-064	54-55
95061-090	29-57
95061-106	29-4
95061-106	31-34
95061-113	65-47
95061-115	119-42
95061-115	119A-36
95061-118	119-43
95061-118	119A-37
95061-129	48-36
95061-129	50-63
95061-133	50-43
95061-134	50-44
95061-135	50-45
95061-136	50-46
95061-141	39-70
95061-144	51-24
95061-151	42-11
95061-152	92-19
95061-153	32A-12
95061-157	32B-11
95061-161	29-11
95061-161	31-33
95067-000	91-7
95067-000	91-16
95068-000	91-18
95070-004	2-12
95070-004	91-11
95070-005	2-12
95070-005	91-11
95071-004	2-11
95071-004	91-1
95071-005	2-11
95071-005	91-1
95153-029	89-35
95228-000	27-10
95228-003	101-48
95241-011	34-10
95241-015	34-15
95241-016	34-15
95241-019	34-15
95241-025	34-15
95615-002	3A-23
95615-002	3A-28
95615-003	3A-23
95615-003	3A-28
95615-006	3A-22
95615-007	3A-22
95628-000	3A-30
95636-000	4-14
95636-000	5-34
95636-001	4-14
95636-001	5-34
95639-002	3-2
95639-002	3A-2
95639-003	3-2
95639-003	3A-2
95643-006	2-26
95643-006	54-32
95643-007	2-26
95643-007	54-32
95675-000	92-84
95678-002	5-4a
95680-000	92-73
95680-001	92-73
95978-000	34-77
95978-000	124-38
96129-000	9-66
96166-000	65-90a
96167-000	65-90b
96272-000	24-12a
96272-000	124-8
96288-000	91-8
96288-000	91-17
96333-000	13-48
96333-001	13-48
96352-003	2-35
96352-003	2-38
96352-003	2-45
96352-003	2-47
96352-003	2-48
96352-003	2-49
96564-000	45-23
96602-000	34-78
96602-000	124-39
96611-000	29-15a
96611-001	29-15a
96684-000	13-84
96697-004	25-14
96700-004	13-72
96700-005	13-72
96718-004	65-36
96718-005	65-37
96734-000	119-40
96734-000	119A-34
96734-000	124-62
96765-000	29-2a
96765-001	29-2a
96765-007	29-8
96766-016	54-1
96766-016	55-1

Part Number	Figure and Index No.
96766-017	54-1
96766-017	55-1
96806-010	29-2
96806-011	29-2
96806-012	29-16
96806-012	30-2
96806-012	31-2
96806-017	29-46
96806-022	29-16
96806-022	31-2
96806-024	29-16
96806-026	29-46
96810-002	29-16a
96810-002	29-22a
96810-002	29-28a
96810-002	30-2a
96810-002	31-2a
96810-003	29-16a
96810-003	31-2a
96815-000	29-16c
96827-002	29-17
96827-003	29-17
96827-004	29-23
96827-005	29-23
96827-006	29-18
96827-007	29-18
96827-008	29-24
96827-009	29-24
96827-013	29-17
96827-014	29-17
96827-015	29-23
96827-016	29-23
96827-017	29-18
96827-018	29-18
96827-019	29-24
96827-020	29-24
96827-024	29-17
96827-025	29-17
96827-026	29-18
96827-027	29-18
96827-031	29-18
96827-032	29-18
96827-033	29-17
96827-034	29-17
96839-000	9-14
96839-001	9-14
96839-001	10-23
96844-000	3A-24
96844-000	3A-26
96844-002	3-20
96844-003	3A-12
96851-000	12-21
96853-000	18-60
96853-000	124-2
96860-003	65-89
96863-000	19-2c
96863-006	20-19a
96864-000	19-2e
96864-000	20-19b
96866-000	24-40
96866-000	24-92
96871-000	91-6
96877-000	13-52
96877-001	13-52
96878-000	13-52
96878-001	13-52
96880-000	14-25
96884-000	13-70
96884-001	13-70
96885-000	14-43
96885-001	14-43
96890-000	13-23
96890-001	13-23
96896-000	13-74
96896-002	14-2
96897-000	13-85
96908-000	29-53
96908-000	32-10
96908-000	32B-17
96921-003	24-78
96926-000	2-28
96926-000	2-30
96927-000	2-29
96981-007	20-1
96981-009	20-1
96993-002	20-43
96994-003	96-2a
96995-000	20-2
96995-006	20-2
96996-000	20-51a
99002-006	34-5
99009-002	33-7
99009-003	33-7
99010-000	33-6
99010-002	34-9
99031-000	99-68
99031-000	106-17
99035-003	45-19
99037-000	20-2
99038-000	4-5
99038-003	4-5
99039-000	4-5
99039-003	4-5
99040-000	4-7
99040-001	4-7
99040-008	4-7
99040-009	4-7
99059-000	34-55
99059-004	34-55
99060-000	34-54
99060-000	34-57
99060-004	34-54
99060-004	34-57
99060-006	34-54
99060-006	34-55
99061-000	34-56
99061-004	34-56
99061-006	34-56
99061-006	34-57
99062-000	34-53
99062-004	34-53
99062-006	34-53
99064-000	34-57
99064-004	34-57
99064-006	34-57
99069-000	20-41
99069-002	20-41
99069-003	20-41
99069-004	20-41
99070-000	20-42
99072-000	42-9
99077-000	29-18a
99077-001	29-18a
99077-002	29-24a
99077-003	29-24a
99077-004	29-2a
99077-005	29-2a
99077-008	29-2a
99077-009	29-2a
99077-016	29-18a
99077-017	29-18a
99080-000	42-6
99093-000	29-16a
99093-000	29-22a
99093-000	29-28a
99093-000	30-2a
99093-007	29-16a
99094-002	74-7
99094-002	75-7
99096-000	75-4
99096-003	74-4
99121-000	24-76
99121-000	123-8
99121-000	124-10
99130-002	98-2
99130-002	99-2
99139-000	25-16
99140-000	25-18
99140-000	32B-29
99141-000	32B-30
99141-003	25-17
99142-000	25-19
99161-000	95-12
99198-000	111-19
99209-000	115-3
99214-000	34-85
99227-000	34-64
99229-000	34-35
99229-004	34-35
99231-002	24-57
99231-003	24-57
99231-004	24-57
99231-005	24-57
99231-006	24-57
99231-007	24-57
99231-008	24-57
99231-009	24-57
99231-010	24-57
99231-011	24-57
99231-012	24-57
99231-013	24-57
99232-002	24-58
99232-003	24-58
99232-004	24-58
99232-005	24-58
99232-006	24-58
99232-007	24-58
99232-008	24-58
99232-009	24-58
99232-010	24-58
99232-011	24-58
99232-012	24-58
99232-013	24-58
99233-002	24-59
99233-003	24-59
99233-004	24-59
99233-005	24-59
99233-006	24-59
99233-007	24-59
99233-008	24-59
99233-009	24-59
99233-010	24-59
99233-011	24-59
99233-012	24-59
99233-013	24-59
99234-000	22-17
99234-002	22-17
99234-004	22-17
99234-005	22-17
99234-006	22-17
99234-007	22-17
99234-008	22-17

Part Number	Figure and Index No.
99234-009	22-17
99234-010	22-17
99234-011	22-17
99234-012	22-17
99234-013	22-17
99235-002	24-60
99235-003	24-60
99235-004	24-60
99235-005	24-60
99235-006	24-60
99235-007	24-60
99235-008	24-60
99235-009	24-60
99235-010	24-60
99235-011	24-60
99235-012	24-60
99235-013	24-60
99236-002	24-61
99236-003	24-61
99236-004	24-61
99236-005	24-61
99236-006	24-61
99236-007	24-61
99236-008	24-61
99236-009	24-61
99236-010	24-61
99236-011	24-61
99236-012	24-61
99236-013	24-61
99237-002	24-62
99237-003	24-62
99237-004	24-62
99237-005	24-62
99237-006	24-62
99237-007	24-62
99237-008	24-62
99237-009	24-62
99237-010	24-62
99237-011	24-62
99237-012	24-62
99237-013	24-62
99238-002	19-46
99238-003	19-46
99238-004	19-46
99238-005	19-46
99238-006	19-46
99238-007	19-46
99238-008	19-46
99238-009	19-46
99238-010	19-46
99238-011	19-46
99238-012	19-46
99238-013	19-46
99239-002	20-59
99239-003	20-59
99239-004	20-59
99239-005	20-59
99239-006	20-59
99239-007	20-59
99239-008	20-59
99239-009	20-59
99239-010	20-59
99239-011	20-59
99239-012	20-59
99239-013	20-59
99255-000	29-46
99255-003	29-46
99263-000	44-3
99271-000	44-8
99272-000	15-41
99273-000	15-42
99275-002	44-4
99275-002	44-9
99275-004	44-28
99278-003	15-43
99280-000	15-50
99280-001	15-50
99289-000	66-36
99289-000	69-10
99305-000	30-3a
99305-001	30-3a
99305-008	30-3a
99305-009	30-3a
99344-000	112-15
99353-004	30-1
99353-005	30-1
99353-007	30-2
99353-012	30-3
99353-013	30-3
99353-016	30-1
99353-017	30-1
99353-018	30-2
99353-021	30-3
99353-022	30-3
99361-000	29-47
99367-000	123-25
99367-000	124-49
99368-000	123-26
99368-000	124-50
99377-002	100-16
99377-002	101-13
99377-003	100-19
99377-003	101-15
99377-004	37-26
99377-005	101-12
99377-006	100-18
99377-006	101-14
99377-006	106-3
99377-007	101-14
99377-007	106-3
99384-004	29-1
99384-005	29-1
99384-007	29-16
99384-012	29-2
99384-013	29-2
99385-000	29-17
99385-001	29-17
99385-002	29-23
99385-003	29-23
99385-004	29-22
99385-004	29-28
99385-005	29-24
99385-006	29-24
99385-007	29-18
99385-008	29-18
99387-000	44-1
99395-000	111-18
99395-000	112-9
99395-002	111-18
99395-002	112-9
99395-003	111-18
99395-003	112-9
99398-000	109-4
99401-000	109-9
99409-000	111-14
99421-000	9-46
99421-000	9-47
99421-000	10-42
99422-002	11-68
99422-002	11-69
99422-003	12-35
99422-004	11-68
99422-004	12-34
99429-000	92-90
99430-000	92-89
99431-000	34-59
99432-000	34-39
99432-003	34-39
99434-000	34-35
99434-002	34-35
99435-000	32-3
99435-000	119-15
99435-000	123-15
99435-000	124-23
99445-000	124-69
99448-000	115-11
99448-000	124-61
99458-000	24-1
99464-000	24-39
99466-006	8-2
99466-006	15-1
99466-007	8-2
99466-007	15-1
99466-011	8-2
99466-011	15-1
99466-018	8-2
99466-018	15-1
99466-019	8-2
99466-019	15-1
99466-020	8-2
99466-020	15-1
99468-000	15-2
99468-003	15-2
99469-003	15-5
99470-000	15-3
99470-001	15-3
99471-002	15-4
99471-003	15-4
99478-000	33-8
99480-000	34-22
99487-000	15-48
99487-001	15-48
99488-000	15-49
99495-000	44-5
99496-000	15-39
99498-000	15-54
99499-000	66-49
99499-000	67-7
99499-000	67A-7
99499-000	68-7
99499-000	82-6
99499-000	83-49
99507-000	43-24
99521-000	107-4
99528-000	107-20
99537-002	107-1
99539-000	43-27
99545-000	15-46
99549-007	15-3
99549-009	15-3
99549-014	15-3
99550-002	43-28
99552-000	15-44
99552-002	15-44
99555-000	15-47
99557-000	44-22
99558-000	15-45
99559-001	15-3a
99559-002	15-3a
99561-000	15-40
99561-000	44-25
99569-000	44-27

Part Number	Figure and Index No.
99572-000	44-26
99572-004	44-26
99580-000	42-33
99592-008	42-19
99592-009	42-20
99609-000	15-52
99610-002	111-10
99610-003	111-11
99615-000	15-37
99615-001	15-37
99619-002	45-4a
99621-000	45-4b
99631-000	15-38
99633-000	28-9
99633-000	43-8
99634-000	43-29
99640-000	43-1
99640-003	43-2
99641-000	28-7
99641-000	43-6
99642-003	28-4
99642-003	43-3
99644-000	43-30
99646-002	43-9
99648-000	43-12
99650-000	43-13
99661-000	43-15
99667-002	34-51
99667-003	34-51
99667-004	34-51
99667-005	34-51
99667-006	34-51
99667-007	34-51
99670-000	34-65
99678-000	29-16g
99678-001	29-16g
99678-002	29-16g
99678-003	29-16g
99678-004	29-16g
99678-005	29-16g
99678-006	29-16g
99678-007	29-16g
99678-008	29-16g
99678-009	29-16g
99678-010	29-16g
99678-011	29-16g
99680-008	111-25
99681-000	29-16b
99681-001	29-16b
99681-002	29-16b
99681-003	29-16b
99681-004	29-16b
99681-005	29-16b
99681-006	29-16b
99681-007	29-16b
99681-008	29-16b
99681-009	29-16b
99681-010	29-16b
99681-011	29-16b
99695-003	101-2
99695-003	124-55
99695-004	101-3
99695-004	124-56
99695-016	101-46
99695-016	124-55
99696-002	101-1
99696-003	101-1
99709-000	124-69
99711-000	124-74
99717-000	107-2
99717-000	107-26
99718-001	29-16j
99718-005	29-16j
99718-005	31-4
99719-003	31-6
99719-016	31-7
99721-002	29-16c
99721-003	29-16c
99724-000	29-9
99727-005	29-1
99727-012	29-2
99727-013	29-2
99727-015	29-16
99727-022	29-1
99727-023	29-16
99728-000	124-75
99729-000	12-32
99729-001	12-32
99730-000	29-17
99730-001	29-17
99730-002	29-23
99730-003	29-23
99730-004	29-22
99730-004	29-28
99730-005	29-24
99730-006	29-24
99730-007	29-18
99730-008	29-18
99733-002	24-78
99734-002	24-78
99737-002	24-77
99745-000	111-24
99752-000	25-21a
99763-000	42-5
99766-000	73-2
99767-000	73-6
99768-000	73-5
99769-000	73-6a
99776-000	73-1a
99778-000	73-1
99781-000	73-13
99783-000	19-39
99783-000	20-23
99787-000	24-29
99789-000	107-22
99790-000	24-113
99801-000	24-77
99801-002	24-77
99803-005	45-11
99803-007	45-11
99804-000	107-21
99805-003	15-32
99813-002	15-32
99841-003	111-1
99849-008	67-39
99849-008	67A-39
99849-008	68-29
99851-000	107-9
99853-000	44-16
99854-000	44-11
99856-000	94-63
99862-000	107-18
99867-000	44-18
99868-000	45-18
99887-002	110-8
99887-004	110A-9
99887-006	110B-7
99888-000	110-9
99888-000	110A-10
99889-000	110-10
99889-000	110A-11
99903-003	17-15
99903-005	17-15
99921-000	34-42a
99921-000	124-30
99943-000	17-50
99943-000	17-52
99943-000	18-43
99943-000	19-56
99943-000	19A-8
99944-004	66-60
99990-000	17-39
99990-000	19-59
99991-000	24-90
99997-000	17-40
99997-000	18-22
99997-000	19-58
99997-000	19A-6b
99997-000	20-83
99999-000	20-85
99999-000	107-27
105041-002	55-7
107 872	2-28
151 296	45-40a
151-296	50-64
187 625	49-21
187 627	51-10
187 627	55-6
189 139	19-38
189 139	19A-2
189 139	20-35
189 139	21-3
189 139	22-25
189 139	23-36
189 315	62-15
189 732	89-23
400 002	31-46
400 002	86-50
400 002	86-65
400 003	45-24
400 003	45-25
400 003	46-25
400 003	53-54
400 003	53-58
400 003	53-60
400 003	58-8
400 003	58-9
400 004	29-54
400 004	46-26
400 004	58A-26
400 004	93-42
400 008	2-42
400 008	92-51
400 008	97-6
400 009	32B-34
400 009	42-17
400 011	50-49
400 011	93-4
400 015	52-11
400 025	96-24
400 053	89-59
400 055	77-46
400 055	78-58
400 055	80-62
400 056	45-33
400 056	80-62
400 056	96-27
400 058	48-31
400 103	69-14
400 103	70-7

Part Number	Figure and Index No.
400 103	71-17
400 108	50-51
400 112	50-53
400 113	19A-20
400 113	60-44
400 165	53-35
400 166	53-32
400 185	81-19
400 192	50-50
400 220	50-48
400 224	44-24
400 229	50-42
400 279	50-59
400 302	53-40
400 437	65-95
400 437	65-97
400 437	94-34
400 437	116-21
400 438	47-29
400 438	49-23
400 438	66-41
400 438	67-57
400 438	79-41
400 438	80-53
400 438	81-86
400 438	93-41
400 438	94-26
400 438	94-36
400 438	97-15
400 438	114-16
400 440	29-37
400 440	29-56
400 440	32-12
400 440	44-35
400 440	50-52
400 440	93-39
400 441	14-51
400 441	29-35
400 441	29-36
400 441	29-54
400 441	29-55
400 441	29-56
400 441	44-31
400 441	48-32
400 441	57-38
400 441	65-73
400 441	86-33
400 443	48-25
400 443	50-67
400 443	65-74
400 443	92-79
400 443	93-35
400 443	113-4

Part Number	Figure and Index No.
400 444	2-44
400 444	2-51
400 444	96-29
400 446	94-25
400 446	94-62
400 448	93-39
400 448	119-57
400 449	94-30
400 450	45-43
400 450	48-33
400 451	54-43
400 453	48-33
400 456	92-57
400 456	92-58
400 457	92-57
400 457	92-84
400 460	68-38
400 464	66-37
400 464	67-50
400 464	67A-50
400 466	71-14
400 466	71-15
400 496	92-84
400 562	93-36
400 616	42-7
400 653	93-37
400 653	93-38
400 653	96-28
400 653	96-30
400 665	19A-28
400 668	19A-32
400 669	9-62
400 669	19-74
400 669	20-71
400 669	57-29
400 670	32-6
400 672	93-44
400 672	95-3
400 672	97-16
400 673	93-44
400 674	76-23
400 674	77-39
400 674	78-50
400 674	79-45
400 674	80-50
400 674	81-87
400 674	92-65
400 674	92-78
400 680	93-48
400 711	54-21
400 728	104-14
400 744	51-43
400 761	50-56

Part Number	Figure and Index No.
400 860	9-61
400 860	57-30
400 861	44-30
400 861	44-33
400 861	44-36
400 862	19-77
400 862	19A-53
400 862	86-34
400 867	62-10
400 869	97-18
400 870	20-73
400 871	50-20b
400 871	62-27
400 876	60-49
400 880	54-30a
400 880	54-31
400 883	11-78
400 901	86-32
400 916	32A-9
401 185	105-14
401 186	2-39
401 187	2-39
401 187	29-59
401 187	32-15
401 188	54-51
401 188	57-36
401 188	92-46
401 188	92-66
401 189	54-52
401 194	29-58
401 257	62-9
401 261	119A-56
401 264	45-46
401 265	51-38
401 266	19-60
401 266	24-27
401 266	29-36
401 266	47-18
401 266	55-15
401 266	74-10
401 266	75-10
401 266	91-10a
401 266	91-21
401 266	94-35
401 266	113-3
401 269	44-34
401 269	45-32
401 269	50-55
401 269	67A-59
401 269	68-21
401 269	80-62
401 269	81-69
401 269	92-49

Part Number	Figure and Index No.
401 269	94-37
401 269	96-22
401 270	2-41
401 270	2-51
401 270	96-23
401 270	96-25
401 270	96-29
401 270	113-5
401 272	119-73
401 273	44-7
401 273	49-25
401 274	48-32
401 274	50-60
401 274	93-19
401 274	116-22
401 279	67-63
401 279	94-32
401 279	119-56
401 280	62-26
401 300	65-75
401 301	66-50
401 301	67-67
401 301	67A-67
401 301	68-56
401 301	82-30
401 301	83-47
401 302	50-64
401 306	102-14
401 306	102-28
401 307	102-12
401 307	104-13
401 310	58-3
401 310	66-40
401 310	67-54
401 310	67A-53
401 310	68-57
401 310	82-25
401 310	83-40
401 310	96-36
401 311	53-53
401 312	32-13
401 312	48-25
401 312	58A-33
401 315	30-25
401 315	92-87
401 315	92-88
401 318	29-5
401 318	31-45
401 318	50-49
401 318	92-77
401 318	93-52
401 320	55-41
401 329	55-37

Part Number	Figure and Index No.
401 330	49-26
401 333	57-35
401 333	96-24
401 334	44-32
401 335	54-47
401 343	37-30
401 343	67A-61
401 343	68-23
401 353	92-42
401 353	92-86
401 354	92-68
401 360	49-22
401 361	57-37
401 370	49-24
401 371	49-26
401 375	56-15
401 378	92-55
401 385	92-40
401 387	92-62
401 394	42-12
401 400	49-32
401 403	49-31
401 405	48-26
401 405	66-54
401 405	67-71
401 405	67A-43
401 406	68-60
401 456	48-1
401 461	42-26
401 520	66-38
401 520	67-52
401 521	67-52
401 521	67A-70
401 521	68-58
401 856	57-31
401 888	68-57
401 918	48-27
401 918	53-38
401 918	57-32
401 918	66-39
401 918	78-48
401 970	42-29
401 970	103-32
401 970	103-34
401 970	103-35
401 971	42-28
401 971	103-33
401 971	103-34
401 971	103-36
401 986	42-27
401 986	65-1c
401 987	42-39
401 988	42-30

Part Number	Figure and Index No.
402 057	11-76
402 060	11-67
402 312	55-35
402 313	51-41
402 314	97-6
402 315	50-41
402 324	48-43
402 344	51-40
402 344	55-34
402 344	55-36
402 345	55-34
402 349	2-36
402 349	2-47
402 349	2-48
402 349	2-49
402 351	2-38
402 352	2-35
402 352	2-37
402 366	2-45
402 506	57-31
402 679	92-77
402 680	2-32
402 680	45-26
402 681	2-42
402 690	2-39
402 775	48-30
402 869	50-40
402 890	15-36
402 897	15-35
402 901	54-45
402 915	2-50
402 927	54-30
402 938	50-12
402 960	54-53
403 097	57-33
403 097	57-34
404 004	35-31
404 100	45-33
404 100	54-30a
404 100	54-31
404 100	76-23
404 100	77-38
404 100	77-39
404 100	77-46
404 100	78-49
404 100	78-50
404 100	78-58
404 100	79-45
404 100	80-47
404 100	80-50
404 100	80-62
404 100	81-71
404 100	81-87

Part Number	Figure and Index No.
404 100	93-48
404 101	19A-20
404 101	37-30
404 101	50-12
404 101	50-41
404 101	50-51
404 101	50-53
404 101	51-41
404 101	55-35
404 101	60-44
404 101	67A-61
404 101	68-23
404 101	69-14
404 101	70-7
404 101	71-17
404 102	50-50
404 102	51-40
404 102	55-34
404 102	55-36
404 104	96-26
404 105	53-40
404 122	53-28
404 123	50-42
404 123	50-48
404 124	50-59
404 224	45-34
404 224	60-47
404 224	65-70
404 224	65-90c
404 224	67A-52
404 224	68-16
404 224	77-40
404 224	78-51
404 224	80-51
404 224	80-63
404 224	81-79
404 224	82-26
404 224	83-39
404 224	93-40
404 225	48-9
404 225	48-12
404 225	48-12
404 225	54-44
404 263	38-56
404 263	39-56
404 320	93-24b
404 321	62-6
404 322	48-30
404 322	50-26
404 322	92-76
404 322	93-24a
404 323	62-23
404 323	104-14

Part Number	Figure and Index No.
404 325	94-38
404 326	54-31a
404 391	19A-28
404 391	93-36
404 391	93-37
404 391	93-38
404 391	96-28
404 391	96-30
404 392	19A-32
404 392	28-36
404 392	38-74
404 392	39-37
404 392	48-31
404 392	76-26
404 392	79-44
404 392	89-59
404 392	92-65
404 392	92-78
404 392	93-44
404 392	95-3
404 392	96-27
404 392	97-16
404 393	54-21
404 394	81-23
404 395	54-30
404 395	54-45
404 526	45-32
404 526	45-43
404 526	50-20b
404 526	50-35
404 526	50-36
404 526	50-40
404 526	50-52
404 526	50-55
404 526	50-60
404 526	50-67
404 526	60-45
404 526	60-46
404 526	60-49
404 526	65-73
404 526	65-92c
404 526	65-95
404 526	65-97
404 529	19-12
404 530	2-32
404 530	50-49
404 530	53-55
404 530	53-60
404 532	2-45
404 532	2-46
404 532	2-47
404 532	2-48
404 532	2-49

Part Number	Figure and Index No.
404 532	2-50
404 532	50-56
404 556	15-35
404 556	15-36
404 562	38-29
404 562	39-39
404 563	38-26
404 563	68-60
404 564	92-49
404 564	92-78
404 564	92-79
404 584	39-30
404 638	102-13
404 751	114-15
404 751	118-46
404 829	72-20
404 829	73-27
404 832	54-53
404 833	20-54
404 833	20-55a
404 833	73-24
404 833	81-81
404 833	95-5
404 835	38-25
404 835	38-28
404 835	38-58
404 835	44-35
404 835	71-14
404 835	71-15
404 835	72-17
404 835	72-21
404 835	73-26
404 835	73-28
404 835	74-10
404 835	75-10
404 835	76-24
404 835	76-25
404 835	76-29
404 835	76-30
404 835	76-32
404 835	76-33
404 835	79-46
404 835	96-21
404 835	96-23
404 835	96-25
404 835	96-29
404 835	97-8
404 835	97-18
404 835	104-12
404 835	104-15
404 835	105-12
404 835	114-16
404 836	38-27
404 836	48-43
404 836	55-37
404 836	74-20
404 836	75-22
404 836	86-50
404 836	93-4
404 836	97-6
404 837	11-67
404 837	11-76
404 837	29-59
404 837	32-15
404 837	51-43
404 837	105-14
404 838	48-28
404 840	51-42
404 843	55-29
404 883	72-19
404 887	2-40
404 887	2-41
404 887	2-44
404 887	2-51
404 887	9-44
404 887	9-61
404 887	9-62
404 887	9-80
404 887	10-55
404 887	11-78
404 887	14-51
404 887	19-60c
404 887	23-20a
404 887	29-36
404 887	29-37
404 887	32A-13
404 887	38-25
404 887	38-28
404 887	38-56
404 887	39-21
404 887	39-25
404 887	39-26
404 887	39-30
404 887	39-56
404 887	39-71
404 887	44-7
404 887	44-30
404 887	44-31
404 887	44-33
404 887	44-34
404 887	44-36
404 887	48-25
404 887	48-32
404 887	48-33
404 887	49-23
404 887	49-25
404 887	54-43
404 887	55-15
404 887	57-29
404 887	57-30
404 887	57-38
404 887	62-10
404 887	62-11
404 887	62-26
404 887	62-28
404 887	66-37
404 887	67-50
404 887	67-51
404 887	67-57
404 887	67-63
404 887	67A-50
404 887	67A-51
404 887	67A-52
404 887	67A-59
404 887	68-16
404 887	68-21
404 887	68-38
404 887	72-18
404 887	74-15
404 887	77-27
404 887	78-27
404 887	78-56
404 887	79-39
404 887	79-50
404 887	80-48
404 887	80-54
404 887	80-58
404 887	80-62
404 887	81-69
404 887	81-74
404 887	81-82
404 887	81-84
404 887	81-85
404 887	82-24
404 887	83-41
404 887	85-47
404 887	86-33
404 887	86-34
404 887	86-55
404 887	88-20
404 887	88-63
404 887	88-64
404 887	89-55
404 887	92-49
404 887	92-57
404 887	92-58
404 887	92-79
404 887	92-84
404 887	93-19
404 887	93-39
404 887	94-25
404 887	94-30
404 887	94-32
404 887	94-36
404 887	94-37
404 887	94-62
404 887	96-23
404 887	96-29
404 887	105-13
404 887	113-3
404 887	113-4
404 887	113-5
404 887	116-21
404 887	116-22
404 887	119-73
404 887	119A-56
404 888	2-42
404 888	29-5
404 888	30-24
404 888	30-25
404 888	31-45
404 888	31-46
404 888	32-13
404 888	38-27
404 888	39-72
404 888	42-17
404 888	44-32
404 888	45-24
404 888	46-25
404 888	46-26
404 888	48-25
404 888	49-26
404 888	52-13
404 888	53-53
404 888	53-54
404 888	55-41
404 888	57-33
404 888	57-34
404 888	57-35
404 888	58A-28
404 888	61-16
404 888	66-40
404 888	67-54
404 888	67A-53
404 888	82-25
404 888	83-40
404 888	86-32
404 888	92-51
404 888	92-77
404 888	93-42
404 888	93-52
404 888	96-24

Part Number	Figure and Index No.
404 888	96-25
404 888	96-36
404 888	97-6
404 888	104-13
404 889	2-39
404 889	29-58
404 889	32-12
404 889	49-22
404 889	49-22
404 889	49-24
404 889	49-26
404 889	52-13
404 889	54-51
404 889	56-14
404 889	57-36
404 889	92-40
404 889	92-42
404 889	92-46
404 889	92-55
404 889	92-62
404 889	92-66
404 889	92-68
404 889	92-86
404 890	2-35
404 890	2-36
404 890	2-37
404 890	2-38
404 890	42-12
404 890	49-31
404 890	49-32
404 890	66-54
404 890	67-71
404 890	67A-43
404 891	66-38
404 891	67-52
404 891	67A-70
404 891	68-58
404 908	21-14
404 908	38-67
404 909	24-114
404 909	37-29
404 909	37-52
404 909	38-29
404 909	38-57
404 909	38-61
404 909	39-38
404 909	39-39
404 909	39-70
404 909	48-24
404 909	53-56
404 909	59-12
404 909	69-12
404 909	69-13

Part Number	Figure and Index No.
404 909	69-15
404 909	116-18
404 910	21-20
404 910	32B-35
404 910	38-24
404 910	38-26
404 910	38-58
404 910	39-17
404 910	57-39
404 910	67-53
404 910	67-56
404 910	78-55
404 910	79-42
404 910	81-73
404 910	81-75
404 910	81-76
404 910	82-23
404 910	83-38
404 910	89-62
405 350	62-27
406 345	81-25
406 364	98-33
406 373	59-10
406 373	59-11
406 382	86-64
406 387	59-9
406 393	99-69
406 394	39-40
406 415	5-53
406 424	27-4c
406 424	27-6c
406 424	27-18
406 424	43-20a
406 424	43-23a
406 424	43-33
406 427	38-30
406 551	94-35
406 637	2-32
406 637	2-42
406 637	53-58
406 642	17-42
406 642	18-54
406 646	74-22
406 660	54-49
406 666	100-22
406 667	100-23
406 709	45-27
406 809	16-7
406 809	17-41
406 809	18-53
406 823	16-8
406 823	17-43
406 830	49-29

Part Number	Figure and Index No.
406 832	18-55
406 834	74-23
406 848	111-27
406 848	111-37
406 863	21-12
406 863	22-29
406 863	23-35
406 863	114-15
406 863	118-46
406 927	2-31
406 940	2-30
406 942	2-30
406 945	2-42
406 945	45-26
406 946	2-39
406 974	92-77
407 041	17-12
407 043	60-47
407 043	67A-59
407 043	68-21
407 043	80-51
407 043	81-79
407 043	83-39
407 043	91-10a
407 043	91-21
407 044	80-45
407 044	80-63
407 044	81-72
407 044	83-37
407 103	79-43
407 103	116-20
407 104	67A-37
407 104	68-73
407 104	77-40
407 104	78-51
407 105	78-54
407 106	102-13
407 106	104-14
407 120	20-33
407 122	111-27
407 122	111-37
407 124	60-50
407 131	116-19
407 134	52-8
407 134	114-15
407 134	118-46
407 135	31-51
407 135	72-15
407 136	48-12
407 136	66-39
407 136	72-14
407 136	73-20
407 136	77-37

Part Number	Figure and Index No.
407 137	103-32
407 137	103-33
407 137	103-35
407 138	72-16
407 138	73-21
407 560	86-33
407 560	86-34
407 561	21-14
407 561	51-49
407 561	53-57
407 562	19A-28
407 562	19A-33
407 562	20-12
407 562	20-14
407 562	24-114
407 562	37-29
407 562	37-52
407 562	53-56
407 562	59-12
407 562	69-13
407 562	93-36
407 562	93-37
407 563	21-13
407 563	32B-35
407 563	67-56
407 563	78-55
407 563	79-42
407 563	81-73
407 563	81-76
407 563	82-23
407 563	83-38
407 563	86-57
407 563	88-22
407 563	89-62
407 563	116-20
407 564	2-40
407 564	2-41
407 564	2-44
407 564	2-51
407 564	9-61
407 564	9-62
407 564	9-80
407 564	10-55
407 564	14-51
407 564	15-35
407 564	15-36
407 564	19-60c
407 564	21-13
407 564	22-34
407 564	23-20a
407 564	23-38
407 564	24A-20
407 564	28-36

Part Number	Figure and Index No.
407 564	29-14
407 564	29-36
407 564	29-55
407 564	29-56
407 564	31-43
407 564	44-30
407 564	44-31
407 564	44-33
407 564	44-34
407 564	44-35
407 564	44-36
407 564	48-25
407 564	48-33
407 564	49-23
407 564	51-38
407 564	54-30a
407 564	54-43
407 564	54-46
407 564	57-29
407 564	57-30
407 564	62-11
407 564	62-26
407 564	62-28
407 564	66-37
407 564	67-50
407 564	67-57
407 564	67-63
407 564	67A-50
407 564	68-38
407 564	72-15
407 564	72-17
407 564	72-18
407 564	73-28
407 564	74-10
407 564	74-14
407 564	74-15
407 564	75-10
407 564	75-24
407 564	79-39
407 564	80-48
407 564	80-54
407 564	81-84
407 564	81-85
407 564	82-24
407 564	83-41
407 564	85-47
407 564	86-33
407 564	86-34
407 564	86-55
407 564	86-58
407 564	88-20
407 564	88-23
407 564	88-63
407 564	88-64
407 564	89-55
407 564	91-10a
407 564	91-21
407 564	92-65
407 564	92-84
407 564	93-19
407 564	93-35
407 564	93-39
407 564	93-41
407 564	93-44
407 564	93-48
407 564	94-32
407 564	94-36
407 564	94-37
407 564	96-22
407 564	96-23
407 564	96-25
407 564	96-27
407 564	96-29
407 564	97-16
407 564	97-18
407 564	104-12
407 564	104-15
407 564	105-12
407 564	113-3
407 564	113-4
407 564	113-5
407 564	116-21
407 564	116-22
407 564	119-73
407 564	119A-56
407 565	2-32
407 565	2-42
407 565	19A-20
407 565	29-10
407 565	29-54
407 565	30-24
407 565	31-44
407 565	32-13
407 565	32A-9
407 565	35-31
407 565	38-27
407 565	39-72
407 565	44-32
407 565	45-24
407 565	46-25
407 565	46-26
407 565	48-25
407 565	49-26
407 565	51-41
407 565	52-12
407 565	53-53
407 565	53-54
407 565	53-58
407 565	53-60
407 565	54-21
407 565	55-35
407 565	58-3
407 565	58-8
407 565	58A-26
407 565	58A-28
407 565	66-50
407 565	67-67
407 565	67A-67
407 565	68-56
407 565	69-14
407 565	70-7
407 565	71-17
407 565	72-14
407 565	73-20
407 565	79-44
407 565	80-47
407 565	82-30
407 565	83-47
407 565	86-32
407 565	86-50
407 565	86-65
407 565	92-51
407 565	92-77
407 565	92-87
407 565	92-88
407 565	93-52
407 565	94-27
407 565	96-24
407 565	102-12
407 565	104-13
407 566	2-39
407 566	29-58
407 566	29-59
407 566	32-15
407 566	42-28
407 566	49-22
407 566	49-24
407 566	49-26
407 566	52-12
407 566	53-34
407 566	54-51
407 566	54-52
407 566	55-34
407 566	56-16
407 566	57-36
407 566	57-37
407 566	77-16
407 566	78-16
407 566	80-16
407 566	81-22
407 566	83-16
407 566	87-34
407 566	92-40
407 566	92-42
407 566	92-46
407 566	92-50
407 566	92-55
407 566	92-63
407 566	92-66
407 566	92-68
407 566	92-86
407 566	102-13
407 566	103-33
407 566	103-34
407 566	104-14
407 566	105-14
407 567	2-35
407 567	2-36
407 567	2-37
407 567	2-38
407 567	2-45
407 567	2-46
407 567	2-47
407 567	2-48
407 567	2-50
407 567	42-12
407 567	42-26
407 567	48-26
407 567	48-28
407 567	54-45
407 567	64-4
407 567	66-54
407 567	67-71
407 567	67A-43
407 567	72-16
407 567	73-21
407 567	86-59
407 567	87-30
407 567	87-35
407 567	87-36
407 567	92-54
407 568	50-57
407 568	66-38
407 568	66-55
407 568	67-52
407 568	67-74
407 568	67A-70
407 568	68-58
407 568	96-26
407 569	20-55
407 569	42-7
407 569	54-53

Part Number	Figure and Index No.
407 569	57-31
407 569	84-10
407 570	86-59
407 570	87-48
407 570	88-24
407 570	89-63
407 573	89-49
407 582	19A-31
407 583	72-19
407 583	73-24
407 583	73-25
407 583	95-5
407 583	114-15
407 583	118-46
407 584	9-61
407 584	9-62
407 584	11-78
407 584	15-35
407 584	15-36
407 584	19A-32
407 584	24-27
407 584	44-7
407 584	48-31
407 584	48-32
407 584	54-20
407 584	54-30a
407 584	54-31
407 584	55-15
407 584	57-29
407 584	57-30
407 584	62-27
407 584	66-37
407 584	66-41
407 584	67-50
407 584	67A-37
407 584	67A-50
407 584	68-28
407 584	68-38
407 584	68-73
407 584	71-14
407 584	71-15
407 584	76-24
407 584	76-26
407 584	76-33
407 584	77-38
407 584	77-41
407 584	78-49
407 584	78-52
407 584	78-56
407 584	79-41
407 584	79-44
407 584	79-50
407 584	80-47

Part Number	Figure and Index No.
407 584	80-52
407 584	80-53
407 584	80-62
407 584	81-69
407 584	81-71
407 584	81-80
407 584	81-81
407 584	81-86
407 584	81-87
407 584	83-42
407 584	86-52
407 584	88-17
407 584	89-54
407 584	89-59
407 584	92-84
407 584	94-25
407 584	94-30
407 584	94-31
407 584	94-32
407 584	94-34
407 584	94-62
407 584	95-3
407 584	96-22
407 584	96-29
407 584	102-14
407 585	2-32
407 585	2-42
407 585	19-76
407 585	20-44
407 585	20-75
407 585	31-46
407 585	32B-34
407 585	39-37
407 585	42-17
407 585	48-37
407 585	51-41
407 585	53-53
407 585	53-55
407 585	55-37
407 585	57-35
407 585	58A-33
407 585	61-15
407 585	62-25
407 585	66-40
407 585	67-54
407 585	67A-53
407 585	68-57
407 585	79-44
407 585	80-47
407 585	82-25
407 585	83-40
407 585	93-4
407 585	93-42

Part Number	Figure and Index No.
407 585	94-60
407 585	96-24
407 585	97-6
407 586	11-67
407 586	11-76
407 586	19-60a
407 586	19A-48b
407 586	20-53
407 586	20-57
407 586	42-29
407 586	51-40
407 586	53-36
407 586	55-36
407 586	62-27
407 586	92-44
407 586	102-13
407 587	42-26
407 587	42-27
407 587	42-30
407 587	42-39
407 587	49-31
407 587	49-32
407 587	54-30
407 587	84-5
407 588	48-29
407 589	53-33
407 591	50-59
407 591	66-53
407 591	67-70
407 591	67A-61
407 591	67A-69
407 591	68-23
407 591	68-43
407 597	42-26
407 674	62-9
407 674	62-10
407 675	55-41
407 675	57-33
407 675	57-34
407 680	19-60b
407 680	19A-36
407 680	19A-48
407 682	62-9
407 684	57-40
407 684	94-39
407 694	9-44
407 800	29-36
407 800	67A-52
407 800	68-16
407 800	105-13
407 801	58-9
407 964	94-26
408 106	50-56

Part Number	Figure and Index No.
408 811	76-28
408 815	77-15
408 815	78-17
408 815	80-17
408 815	81-21
408 815	83-17
408 826	16-20d
408 826	17-12
408 832	18-10
408 832	78-48
408 834	32A-10
410 011	50-35
410 011	50-36
410 013	50-35
410 039	25-20
410 043	2-7
410 046	86-55
410 046	88-20
410 046	89-55
410 054	45-27
410 059	25-20
411 349	50-54
411 467	2-43
411 530	39-26
411 530	60-50
411 530	65-92a
411 531	60-46
411 532	39-25
411 532	60-45
411 532	75-24
411 532	86-58
411 532	88-23
411 533	39-21
411 533	62-28
411 533	81-74
411 534	60-47
411 534	81-82
411 535	39-71
411 537	32A-13
411 539	9-80
411 539	10-55
411 540	23-20a
411 582	21-18
414 379	38-67
414 518	58A-32
414 761	20-29
414 761	20-56
414 762	25-20
414 762	58A-8
414 762	58A-30
414 763	2-33
414 763	21-20
414 763	45-35

Part Number	Figure and Index No.
414 763	74-21
414 769	19-12
414 769	20-54
414 769	20-55a
414 772	32B-32
414 777	20-55a
414 783	45-16
414 793	58A-17
415 104	116-19
415 144	16-8
415 146	69-12
415 146	69-13
415 148	37-52
415 148	38-62
415 148	69-15
415 148	116-18
415 149	20-34
415 150	16-10
415 150	33-42
415 150	38-29
415 150	92-43
415 151	16-20d
415 151	82-21
415 152	98-35
415 171	59-12
415 179	45-38
415 181	20-33
415 261	86-62
415 264	86-63
415 265	88-28
415 267	89-58
415 309	2-61
415 312	2-60
415 320	2-40
415 322	9-44
415 374	57-39
415 376	24-112
415 378	19-15
415 379	66-41
415 379	67-8
415 379	67A-8
415 379	68-55
415 379	82-7
415 379	83-48
415 380	39-56
415 447	72-22
415 447	72-23
415 447	73-22
415 447	73-23
415 448	21-18
415 448	38-60
415 448	72-19
415 448	72-24
415 448	73-24
415 448	73-25
415 448	116-20
415 449	21-15
415 449	38-24
415 449	38-26
415 449	45-29
415 449	58-4
415 449	59-9
415 449	59-10
415 449	92-64
415 450	16-9
415 450	78-55
415 450	79-42
415 450	82-23
415 452	21-13
415 454	12-18
415 454	22-33
415 454	22-34
415 454	23-38
415 477	16-11
415 493	71-13
415 514	37-29
415 518	20-30
415 518	39-38
415 520	17-41
415 520	17-42
415 520	17-43
415 520	111-27
415 521	17-44
415 521	18-56
415 521	39-39
415 521	92-43
415 521	111-37
415 522	17-12
415 522	18-10
415 522	37-29
415 522	39-70
415 532	39-32
415 533	20-33
415 533	81-24
415 533	81-81
415 535	18-58
415 535	19-60a
415 535	39-17
415 535	81-75
415 535	81-76
415 535	81-77
415 535	92-64
415 535	95-5
415 536	17-45
415 536	18-57
415 536	81-73
415 536	83-38
415 537	18-57
415 537	21-13
415 539	24A-19
415 540	32B-35
415 544	17-46
415 544	18-58
415 683	21-14
415 736	38-61
415 737	38-57
415 737	48-24
415 737	53-56
415 754	38-58
415 754	67-53
415 754	67-56
415 754	86-57
415 974	88-22
416 098	89-60
416 098	89-62
416 209	68-28
416 327	2-40
416 329	66-41
416 346	53-55
416 347	53-55
416 633	58A-25
416 785	75-25
416 785	105-13
416 794	104-12
416 794	105-12
416 795	85-47
416 963	72-15
416 993	62-11
416 993	76-29
416 993	79-46
416 995	38-28
416 995	72-17
416 995	72-18
416 995	73-28
416 995	74-15
416 995	88-63
416 995	104-15
416 996	74-14
416 997	20-32
416 997	38-25
416 997	88-64
417 695	38-56
417 771	38-59
417 772	73-26
417 774	72-21
417 775	38-58
417 775	76-24
417 775	76-25
417 775	76-27
417 776	67-51
417 776	67A-51
417 776	76-30
417 778	76-32
417 778	76-33
417 781	93-40
418 420	72-14
418 420	73-20
418 420	76-28
418 420	77-37
418 420	78-54
418 420	79-43
418 420	80-45
418 420	81-72
418 420	82-22
418 420	83-37
418 461	77-6
418 461	78-8
418 461	80-8
418 461	83-8
418 600	79-51
418 600	81-83
418 649	79-50
418 650	80-54
418 650	81-84
418 942	72-16
418 942	73-21
419 590	38-55
419 590	39-52
419 594	19-60d
419 594	19A-35
419 594	24-65d
419 596	24A-20
419 641	39-61
419 681	20-42b
419 681	22-30
419 681	22-31
419 683	16-12
419 683	16-37
419 683	17-47
419 683	17-48
419 683	18-59
419 683	95-6
419 693	24-13
419 875	16-44
419 875	17-49
419 918	20-53
419 918	20-57
419 920	59-9
419 920	59-10
419 920	59-11
419 920	86-64
419 923	88-31

Part Number	Figure and Index No.
419 932	71-12
419 933	20-42b
419 933	22-32
419 967	19A-14
419 967	95-10
420 692	16-17
420 693	21-27
424 000	62-25
424 026	19A-29
424 026	65-76
424 026	65-77
424 041	19A-28
424 041	19A-33
424 041	93-36
424 041	93-37
424 041	93-38
424 041	96-28
424 041	96-30
424 050	53-57
424 050	55-35
424 050	77-41
424 050	78-52
424 050	80-52
424 050	81-80
424 050	89-59
424 051	19-25
424 051	19-27
424 051	19-76
424 051	19A-20
424 051	19A-32
424 051	20-12
424 051	20-14
424 051	20-31
424 051	20-75
424 051	28-36
424 051	29-14
424 051	31-43
424 051	31-44
424 051	38-74
424 051	39-37
424 051	45-33
424 051	48-31
424 051	48-37
424 051	50-12
424 051	50-51
424 051	50-53
424 051	54-20
424 051	54-21
424 051	54-30a
424 051	54-31
424 051	55-34
424 051	60-43
424 051	60-44

Part Number	Figure and Index No.
424 051	63-14
424 051	65-78
424 051	69-14
424 051	70-7
424 051	71-17
424 051	76-23
424 051	76-26
424 051	77-38
424 051	77-39
424 051	77-46
424 051	78-49
424 051	78-50
424 051	78-58
424 051	79-44
424 051	79-45
424 051	80-47
424 051	80-50
424 051	80-62
424 051	81-23
424 051	81-70
424 051	81-71
424 051	81-87
424 051	83-42
424 051	86-52
424 051	86-53
424 051	88-17
424 051	88-18
424 051	88-20
424 051	89-54
424 051	89-56
424 051	92-47
424 051	92-56
424 051	92-65
424 051	92-78
424 051	93-44
424 051	93-48
424 051	94-29
424 051	94-31
424 051	95-3
424 051	95-4
424 051	96-27
424 051	97-16
424 052	37-30
424 052	50-50
424 052	51-40
424 052	51-41
424 052	51-49
424 052	54-46
424 052	55-36
424 052	67A-61
424 052	68-23
424 052	86-60
424 052	92-45

Part Number	Figure and Index No.
424 052	93-43
424 053	86-60
424 053	88-25
424 053	92-53
424 053	92-67
424 053	92-86
424 054	92-41
424 054	92-52
424 054	92-69
424 055	92-48
424 058	86-54
424 058	88-19
424 058	89-61
424 059	53-40
424 059	54-30
424 059	54-45
424 060	96-26
424 061	50-42
424 061	50-48
424 061	50-59
424 061	84-27
424 062	92-88
424 095	22-11
424 095	23-10
424 095	48-29
424 095	50-41
424 095	53-31
424 123	94-40
424 141	19A-33
424 145	86-55
424 146	51-49
424 146	65-76
424 147	65-77
424 147	86-55
424 147	88-20
424 148	19A-29
424 162	19-27
424 162	20-14
424 163	19-25
424 163	20-12
424 163	53-57
424 169	94-28
424 172	22-9
424 172	23-8
424 174	31-43
424 175	86-53
424 175	88-18
424 175	89-56
424 176	63-11
424 177	63-11
424 178	60-43
424 179	65-78
424 180	94-31

Part Number	Figure and Index No.
424 181	54-20
424 181	63-12
424 184	63-13
424 185	95-4
424 187	29-14
424 187	54-46
424 192	22-10
424 192	23-9
424 195	63-11
424 204	19-76
424 204	20-75
424 205	31-44
424 226	48-37
424 230	48-29
424 357	63-14
424 513	92-87
434 119	87-20
434 120	65-81
434 124	79-30
434 124	85-29
434 124	87-21
434 126	38-52
434 126	39-18
434 126	113-6
434 128	37-18
434 128	37-49
434 128	82-10
434 129	66-8
434 129	66-11
434 129	85-28
434 130	37-19
434 130	86-61
434 131	60-40
434 132	60-38
434 132	60-41
434 135	111-7
434 136	37-17
434 136	85-30
434 138	20-2a
434 144	111-8
434 155	60-39
434 155	87-21
434 156	87-23
434 160	76-10
434 160	79-29
434 163	87-32
434 172	87-22
434 172	87-46
450 030	102-15
450 035	102-15
450 397	98-41
450 397	99-41
450 611	34-6

Part Number	Figure and Index No.
450 658	33-9
450 741	98-17
450 741	99-18
450 741	123-41
450 741	124-83
450 742	98-18
450 742	99-16
450 745	99-17
450 765	33-1
450 909	84-1
450 936	84-1
450 937	84-1
450 962	66-4
451 103	85-27
451 272	111-2
451 273	111-3
451 724	48-5
451 724	53-43
451 731	55-47
451 734	51-45
451 735	48-6
451 735	53-44
451 735	55-48
451 739	51-46
451 752	51-45
451 755	48-39
451 755	52-1
451 786	61-13
451 823	65-45
451 823	99-48
451 823	99-50
451 823	99-52
451 823	99-54
451 823	99-56
451 831	107-15
451 857	89-45
451 857	90-11
451 881	36-24
451 906	42-32
451 907	42-36
451 908	42-37
451 939	36-17
452 009	54-27
452 015	92-61
452 015	94-59
452 332	48-22
452 333	48-23
452 334	48-8
452 334	48-11
452 334	48-42
452 334	50-4
452 334	54-50
452 334	92-75
452 335	62-5
452 335	93-23
452 336	93-24
452 366	51-12
452 368	54-16
452 372	96-5
452 383	92-75a
452 386	29-12
452 386	31-17
452 387	4-29
452 387	4-31
452 387	5-38
452 387	5-40
452 387	47-7
452 387	47-25
452 388	96-20
452 389	96-16
452 394	15-25
452 395	57-19
452 409	98-37
452 410	98-37
452 410	99-62
452 413	94-51
452 418	94-50
452 445	50-6
452 459	92-75
452 461	92-75a
452 465	98-37
452 465	99-62
452 477	51-20a
452 541	103-28
452 558	44-20
452 558	44-23
452 561	44-21
452 570	44-19
452 571	44-13
452 572	42-25
452 573	42-31
452 575	54-5
452 575	54-9
452 584	62-5a
452 606	77-45
452 606	78-57
452 606	80-61
452 606	81-53
452 619	67A-63
452 619	68-25
452 679	29-48
452 686	103-28
452 692	29-48
452 729	50-65
452 766	49-4
452 766	49-10
452 766	49-30
452 860	48-11
452 935	28-8
452 935	43-7
453 123	50-25
453 124	49-17
453 124	51-35
453 124	53-12
453 124	53-24
453 124	55-32
453 141	19-49
453 141	20-63
453 141	24-66
453 158	48-19
453 415	111-25
453 417	111-25
453 425	119-31
453 425	119A-50
453 426	114-6
453 426	115-10
453 426	117-8
453 602	101-8
453 616	35-17
453 616	89-48
453 639	98-9
453 639	99-22
453 656	90-24
453 674	20-86
453 680	85-42
453 687	33-29
453 695	101-30
453 695	109-8
453 706	29-15
453 706	29-21
453 706	29-27
453 714	63-10
453 716	33-31
453 720	33-32
453 732	29-16d
453 732	31-2b
453 732	65-94
453 741	8-13
453 741	8-44
453 766	101-9
453 831	102-26
453 855	112-16
453 856	19-62
453 856	19A-54
453 856	20-69
453 857	19-62
453 901	5-51
453 966	2-59
454 053	49-18
454 053	51-36
454 053	53-14
454 053	53-26
454 053	55-33
454 173	57-20
454 173	60-58
454 225	65-91
454 312	80-25
454 656	113-11
454 656	115-18
454 656	118-49
454 658	37-27
454 668	101-4
454 668	120-6
454 669	101-4
454 670	101-4
454 678	101-4
454 700	100-11
454 701	100-12
454 706	101-4
454 706	120-6
454 707	101-4
454 708	37-27
454 708	101-4
454 709	28-19
454 709	37-27
454 709	107-17
454 710	101-4
454 710	107-17
454 719	101-4
454 743	28-19
454 743	107-17
454 803	66-34
454 806	68-48
454 806	85-22
454 813	79-32
454 813	81-65
454 837	35-26
454 837	40-9
454 837	66-35
454 837	87-43
454 837	122-26
454 838	24-26
454 862	5-52
454 868	39-24
454 868	67-47
454 868	67A-47
454 868	68-52
454 868	81-68
454 873	100-7
454 885	40-11
454 887	19-2d
454 887	38-21

Part Number	Figure and Index No.
454 887	39-19
454 887	65-92
454 887	81-62
454 889	111-25
454 905	77-28
454 905	79-49
454 905	86-37
454 905	88-3
454 905	89-3
454 927	73-19
454 928	37-22
454 928	39-22
454 928	79-35
454 929	37-21
454 929	79-36
454 929	79-47
454 929	81-63
454 929	82-12
454 930	73-18
454 930	81-64
454 932	81-62
454 933	37-23
454 935	67-49
454 935	67A-49
454 935	68-53
454 935	79-37
454 935	81-66
454 944	39-44
454 974	79-34
454 977	67-48
454 977	67A-48
454 977	81-67
454 983	40-10
454 983	67-44
454 983	79-31
454 983	80-46
454 983	82-9
454 983	83-35
454 983	87-50
454 983	102-10
454 983	102-19
454 983	102-23
454 983	102-27
454 983	118-56
454 988	79-33
454 993	38-22
454 993	67-43
454 993	67A-44
454 994	38-53
454 997	9-59
455 112	66-18
455 124	49-16
455 124	51-34
455 124	53-13
455 124	53-25
455 124	55-31
455 151	102-6
455 173	65-49
455 173	85-54
455 356	80-23
455 357	80-22
455 357	81-29
455 358	80-21
455 359	78-23
455 360	77-20
455 360	78-20
455 361	77-21
455 361	78-21
455 405	65-50
455 405	122-20
455 417	119-82
455 932	64-1
455 938	60-3
455 944	63-25
455 944	64-33
455 948	63-25
455 948	64-18
455 968	63-25
455 968	64-45
455 994	54-39
456 016	50-24
456 018	48-10
456 615	43-14
456 703	112-4
456 703	112-21
456 728	104-6
456 728	105-6
456 738	107-10
458 863	65-87
458 864	85-35
458 871	85-32
458 876	87-14
458 880	60-32
458 886	67-32
458 886	67A-32
458 891	63-22
458 893	119-75
458 893	119A-58
458 893	121-8
458 894	53-59
458 894	60-33
458 894	63-6
458 894	63-21
458 894	65-85
458 898	66-29
458 898	67-31
458 898	67A-31
458 900	60-60
458 900	65-55
458 901	88-61
458 901	89-20
458 904	63-20
458 904	65-57
458 904	89-46
458 904	122-32
458 910	60-34
458 910	65-56
458 914	68-36
458 914	89-47
458 929	118-58
458 936	85-34
458 936	87-47
458 940	87-13
458 940	87-49
458 941	35-27
458 945	35-19
458 948	35-18
458 948	36-15
458 948	36-16
458 948	37-32
458 948	37-36
458 948	85-33
458 948	119-55
458 958	35-20
458 958	36-18
459 441	19-67
459 441	20-40
459 849	34-86
459 957	54-28
460 463	86-24
460 463	86-41
460 463	88-57
460 472	65-68
460 594	98-50
460 602	101-23
460 602	112-20
460 629	67-15
460 632	66-19
460 632	67A-15
460 632	68-12
460 651	85-41
460 685	78-47
460 685	79-24
460 685	80-36
460 685	81-36
460 685	82-19
460 685	83-30
460 691	51-25
460 691	53-6
460 691	53-41
460 691	54-3
460 691	54-7
460 691	54-33
460 801	2-27
460 801	54-33
460 807	35-22
460 807	36-20
460 836	36-23
460 860	54-19
460 866	122-16
460 888	35-28
460 888	36-25
460 901	65-43
461 131	54-25
461 136	93-45
461 386	27-4b
461 386	27-6b
461 386	27-15
461 386	43-20
461 386	43-23
461 386	43-26
461 621	100-6
461 622	100-5
461 623	100-4
461 629	99-66
461 629	107-12
461 629	107-28
461 629	107-32
462 007	26-7
462 007	40-14
462 008	26-6
462 008	40-13
462 012	98-4
462 012	99-5
462 019	90-2
462 019	90-17
462 023	35-4a
462 023	36-5
462 024	49-15
462 024	51-37
462 024	53-11
462 024	53-23
462 024	55-27
462 034	51-6
462 034	55-22
462 036	53-27
462 055	57-31
462 058	87-27
462 060	85-43
462 060	86-26
462 060	88-29
462 060	89-24

Part Number	Figure and Index No.
462 061	86-26
462 061	88-30
462 061	89-25
462 112	42-4
463 372	2-34
463 372	3-22
463 372	4-36
463 380	60-21
463 390	111-6
463 401	86-66
463 401	88-56
463 403	88-55
464 031	19-42
464 031	20-80
464 046	19-66
464 048	20-36
464 327	111-20
464 407	111-20
464 412	19A-51
464 412	20-87
465 256	100-1
465 257	100-2
465 258	100-3
465 258	107-31
467 064	111-5
467 066	114-14
467 066	118-45
467 067	98-47a
467 067	99-44a
468 002	111-16
468 006	111-17
469 600	111-28
470 644	67-13
471 068	111-15
471 084	31-51
472 017	58A-4
472 017	58A-16
472 017	74-5
472 017	75-5
472 021	21-9
472 034	26-9
472 036	98-15
472 036	99-13
472 054	34-28a
472 054	34-37a
472 054	34-46
472 054	101-29
472 054	101-37
472 054	107-7
472 054	107-30
472 054	120-4
472 054	120-12
472 056	101-22
472 056	112-19
472 077	21-19
472 081	101-54
472 661	98-36
472 661	99-39
472 665	98-27
472 665	99-33
472 666	98-30
472 666	99-36
472 712	33-18
472 724	26-8
472 736	98-20
472 736	99-19
472 822	109-6
472 823	109-5
472 824	109-7
472 834	107-5
472 844	107-6
472 844	107-29
472 877	27-12
472 895	106-8
472 896	106-8
472 908	26-8
472 908	27-11
472 969	33-20
472 969	34-29
472 987	106-8
472 988	106-8
473 185	24-29
473 187	27-4a
473 187	27-6a
473 187	27-14
473 187	43-19
473 187	43-22
473 187	43-25.
473 617	Misc.-
473 618	Misc.-
474 107	21-22
474 642	111-29
474 652	111-21
474 655	111-34
475 111	66-6
475 111	67-13
475 114	66-6
475 131	67A-13
475 131	68-10
475 210	28-5
475 210	43-4
476 643	37-38
476 643	37-41
476 643	65-60
476 643	118-59
476 643	122-31
476 647	37-37
476 647	37-44
476 647	85-53
476 647	118-57
476 647	121-8
476 648	55-46
476 648	65-59
476 662	86-30
476 662	88-54
476 664	66-31
476 664	67-33
476 664	67A-71
476 673	104-7
476 673	105-7
476 678	85-39
476 678	87-19
476 689	85-40
476 690	86-68
477 611	113-24
477 611	119-76
477 611	119-84
477 611	119A-59
477 618	60-42
477 618	65-72
477 619	87-34
477 620	88-62
477 620	89-22
477 621	68-40
477 621	89-49
477 627	87-38
477 628	87-30
477 628	87-35
477 629	65-71
477 629	66-53
477 629	67-70
477 629	67A-69
477 629	68-43
477 629	85-46
477 629	87-36
477 629	87-37
477 631	85-45
477 631	87-48
477 640	45-16
477 640	45-38
477 640	58A-8
477 640	58A-17
477 668	66-58
477 668	67A-37
477 668	68-73
477 672	2-33
477 672	2-33
477 672	2-43
477 672	21-16
477 672	21-18
477 672	45-15
477 672	45-35
477 672	47-17
477 672	72-23
477 672	72-24
477 672	73-22
477 673	20-29
477 673	72-22
477 673	73-23
477 674	2-33
477 674	58-4
477 680	86-31
477 680	86-42
477 680	88-58
477 683	25-20
477 696	16-20d
477 696	17-12
477 696	18-10
477 696	24-112
477 708	29-5
477 708	31-45
477 708	32A-9
477 710	81-11
477 718	66-42
477 750	65-67
477 778	24A-19
477 816	58A-21
477 816	58A-29
477 877	48-26
477-671	76-27
479 402	68-26
480 063	57-18
480 592	31-41
480 650	67-61
480 683	96-7
480 690	30-14
480 696	93-16
480 698	93-17a
480 700	51-13
480 701	29-14e
480 701	29-27d
480 701	30-12
480 701	31-36
480 702	29-21d
480 715	93-17
480 727	30-13
480 730	96-21
480 730	96-23
480 730	96-25
480 732	29-13
480 732	31-35
480 733	93-17a

Part Number	Figure and Index No.
480 777	31-41
480 789	31-42
480 790	31-37
480 800	19A-30
480 801	31-37
481 214	106-1
481 625	92-39
481 640	94-24
481 640	113-12
481 640	118-50
481 640	119-72
481 640	119A-55
481 651	92-86
481 651	96-8
481 701	86-1
481 708	88-21
481 708	89-18
481 772	8-20
481 879	65-1
484 198	58A-17
484 198	58A-21
484 209	107-16
484 209	107-23
484 222	107-11
484 223	107-16
484 224	29-45
484 229	113-18
484 234	112-18
484 299	26-7
484 299	40-14
484 300	26-7
484 300	40-14
484 303	112-3
484 305	74-27
484 305	75-21
484 307	85-48
484 348	85-38
484 349	66-30
484 359	86-27
484 359	88-51
484 359	89-21
484 373	99-3
484 373	104-10
484 373	105-10
484 375	112-5
484 385	19-51
484 385	20-65
484 385	24-68
484 416	112-6
484 428	58A-17
484 428	74-33
484 436	112-7
484 461	112-22
484 467	107-33
484 483	75-17
484 498	101-19b
484 524	113-19
484 684	51-7
484 684	55-24
484 685	51-8
484 685	55-25
484 691	24-117
484 698	49-13
484 698	61-4
484 701	60-8
484 701	64-9
484 701	64-31
484 705	49-19
484 706	54-40
484 706	60-13
484 706	64-10
484 706	64-25
484 711	9-55
484 711	53-17
484 714	55-23
484 719	54-4
484 719	54-8
484 720	49-20
484 723	51-9
484 727	60-9
484 733	49-12
484 746	53-18
484 747	94-47
484 748	50-2e
484 748	54-41
484 748	64-14
484 748	64-22
484 769	53-10
484 770	49-13
484 788	64-40
484 788	65-48
484 789	53-22
484 790	51-4
484 790	55-5
484 792	9-9d
484 792	10-35
484 796	49-14
484 799	51-5
484 799	55-21
484 800	49-12
484 828	51-32a
484 828	55-25a
484 840	74-19b
484 840	75-20
484 879	68-39
486 126	42-18
486 145	19A-14
486 160	19-69
486 160	20-38
486 188	53-9
486 195	81-11
486 218	58A-21
486 218	58A-29
486 218	58A-31
486 221	39-30
486 281	110-18
486 281	110A-12
486 286	18-53
486 286	18-54
486 286	18-55
486 416	113-17
486 457	42-35
486 545	78-24
486 589	76-4
486 589	79-8
486 896	113-24
486 896	119-83
486 896	119-86
486 896	119A-63
487 147	19-71
487 147	20-77
487 560	24-25
487 560	38-35
487 560	39-50
487 574	8-45
487 629	24-12
487 674	8-43
487 674	21-11
487 674	22-28
487 674	23-34
487 707	74-30
487 707	75-26
487 713	67-62
487 727	67-62
487 777	98-13
487 777	99-11
487 844	100-15
487 868	100-17
487 901	114-12
487 901	115-7
487 901	118-47
487 904	96-41
487 904	101-28
487 922	65-40
487 925	107-13
487 936	101-38
488 310	37-16a
488 310	37-43
488 310	113-26
488 310	119-85
488 310	119A-51
488 315	119-82
488 316	65-63
488 318	85-36
488 318	85-52
488 320	65-61
488 327	65-41
488 327	77-29
488 327	78-29
488 327	80-37
488 327	81-51
488 380	37-16
488 380	37-16a
488 380	113-27
488 462	98-6
488 474	37-39
488 474	37-42
488 474	65-64
488 474	113-26
488 474	118-60
488 485	112-8
488 499	63-23
488 545	98-6
488 545	99-9
488 722	37-4
489 440	101-19a
489 910	92-59
489 910	93-46
489 910	96-34
491 048	85-38
491 050	60-31
491 050	63-19
491 050	65-65
491 050	66-44
491 050	67-75
491 050	85-51
491 050	87-29
491 052	89-43
491 053	86-29
491 053	86-43
491 053	88-15
491 053	88-53
491 053	89-44
491 055	66-32
491 055	67-34
491 055	67A-34
491 055	68-67
491 055	87-17
491 056	87-18
491 060	60-35
491 063	65-66
491 063	85-44

Part Number	Figure and Index No.
491 063	87-16
491 064	87-15
491 083	86-43
491 084	86-28
491 084	88-52
491 806	90-15
492 022	90-15
492 022	90-20
492 041	65-42
492 065	35-5
492 065	36-6
492 100	37-30
492 153	90-7b
492 153	90-19b
492 153	91-14b
492 240	36-6
492 278	91-5
492 278	91-15
492 290	86-4
492 290	88-32
492 338	27-4
492 338	27-6
492 339	27-13
492-291	86-4
492-291	88-32
494 001	16-12
494 001	16-37
494 001	17-47
494 001	17-47
494 001	17-48
494 001	18-59
494 001	20-42
494 001	22-31
494 001	95-6
494 003	24-13
494 004	86-63
494 004	88-28
494 004	89-58
494 025	49-27
494 037	58A-21
494 037	58A-25
494 037	75-25
494 040	65-80
494 060	74-3
494 060	74-31
494 060	75-3
494 066	94-35
494 081	45-35
494 087	104-12
494 087	105-12
494 087	105-13
494 093	96-21
494 093	96-23

Part Number	Figure and Index No.
494 093	96-25
494 101	2-33
494 101	2-43
494 101	32B-32
494 101	58A-8
494 101	58A-17
494 101	58A-29
494 101	58A-30
494 101	58A-31
494 101	58A-32
494 108	37-29
494 114	55-30
494 133	31-46
494 141	20-38
494 159	113-1a
494 177	64-43
494 191	91-22
494 192	65-74
494 227	66-41
494 227	67-8
494 227	67A-8
494 227	68-55
494 227	82-7
494 227	83-48
494 235	65-79
494 678	111-26
510 058	2-33
515 710	24-114
519 851	5-53
519 853	19A-36
519 853	19A-48b
519 900	32B-5
524 145	77-41
524 145	78-52
524 145	80-52
524 145	81-80
524 145	83-42
544 710	39-28
544 827	39-55
548 039	34-6
548 040	34-6
548 068	34-4
548 070	34-4
548 071	34-4
548 097	34-3
548 120	34-4
548 121	34-4
548 153	34-6
548 190	33-9
548 190	34-7
548 230	34-4
548 231	34-4
548 330	34-6

Part Number	Figure and Index No.
548 331	34-6
548 343	34-23
548 407	34-6
548 798	34-62
550 434	22-17
550 465	34-23
550 483	33-9
550 483	34-7
550 487	98-3
550 488	34-6
550 489	34-6
550 491	34-6
550 493	33-7
550 493	34-6
550 503	91-9
550 504	91-19
550 512	33-2
550 512	34-4
550 559	119-15
550 559	119A-15
550 597	34-3
550 614	33-5
550 614	34-1
550 629	33-17
550 629	34-22
550 640	116-1
550 642	116-2
550 643	116-1
550 646	33-4
550 647	33-3
550 654	33-2
550 654	34-4
550 657	33-2
550 657	34-4
550 662	33-47
550 662	34-24
550 777	116-2
550 778	117-18
550 778	118-11
550 778	119-14
550 778	119A-14
550 779	116-1
550 780	117-5
550 781	118-12
550 904	84-1
550 936	66-4
550 936	82-8
550 936	83-20
550 936	84-1
550 937	67-11
550 937	67A-11
550 937	68-8
550 937	84-1

Part Number	Figure and Index No.
550 941	67-11
550 941	67A-11
550 941	84-1
551 114	117-10
551 114	118-39
551 114	119-16
551 114	119A-16
551 216	109-1
551 232	109-2
551 368	29-31
551 376	32-8
551 390	29-31
551 391	29-30
551 391	32B-18
551 392	29-29
551 396	29-48
551 706	53-45
551 706	55-49
551 706	61-1
551 725	55-49
551 725	61-1
551 765	53-46
551 765	55-50
551 765	56-1
551 766	48-39
551 766	52-1
551 770	55-50
551 770	56-1
551 772	51-47
551 772	52B-1
551 773	48-39
551 773	52A-1
551 779	48-39
551 779	52A-1
551 785	48-39
551 785	52-1
551 792	51-47
551 792	52-1
551 876	65-69
551 959	32B-3a
551 983	42-2
551 983	108-1
551 986	78-59
551 986	80-64
551 986	81-88
553 230	42-10
553 266	45-34
553 672	34-12
553 672	99-4
553 673	34-63
554 050	38-44
554 051	80-24
554 051	81-31

Part Number	Figure and Index No.
554 224	98-45
554 350	81-30
554 361	28-35
554 375	39-12
554 422	31-8
554 487	39-13
554 659	122-28
554 678	42-38
554 678	43-16
554 686	111-35
554 701	67-45
554 701	67A-45
554 701	68-50
554 707	65-97
554 714	44-17
554 734	55-43
554 753	32A-11
554 757	78-28
554 757	80-35
554 757	81-50
554 757	83-21
554 761	42-3
554 763	24-26
554 772	39-43
554 775	68-51
554 793	36-29
554 797	89-51
554 827	38-54
554 837	38-20
554 848	69-7
554 848	70-5
554 859	39-23
554 859	39-39
554 861	28-30
554 861	35-30
554 861	36-30
554 861	36-31
554 861	37-40
554 861	37-50
554 861	67A-46
554 861	90-13
554 861	113-22
554 861	118-41
554 861	119-4
554 861	119A-4
554 861	121-9
554 881	67-46
554 881	68-54
554 883	67-40
554 883	67A-40
554 883	68-45
554 885	39-27
554 888	9-75
554 888	10-46
554 888	35-25
554 888	36-28
554 888	122-27
554 890	38-21
554 890	76-19
554 896	38-19
554 896	38-20
554 896	38-70
554 896	39-45
554 925	39-42
554 926	38-76
554 926	39-41
554 926	43-11
554 936	28-31
554 979	54-26
554 979	92-60
554 979	93-47
554 979	94-3
554 979	96-35
554 984	89-50
554 985	35-24
554 985	36-27
554 998	60-36
555 412	42-1
555 421	111-9
555 422	111-9
555 457	44-2
555 501	111-9
555 563	31-9
555 564	31-9
555 565	31-9
555 566	31-9
555 567	31-9
555 568	31-9
555 731	110-17
555 815	81-28
555 816	65-31
555 846	67A-38
555 846	68-46
555 884	31-9
555 885	31-9
555 886	31-9
555 887	31-9
555 888	31-9
555 889	31-9
555 890	31-9
555 891	31-9
555 953	31-9
555 954	31-9
555 955	31-9
555 956	31-9
555 957	31-9
556 105	37-5
556 236	31-9
556 237	31-9
556 238	31-9
556 239	31-9
556 342	31-9
556 343	31-9
556 344	31-9
556 391	68-34
556 705	31-9
558 010	54-39
558 778	122-19
558 779	68-35
558 806	65-54
558 826	65-51
558 830	85-34
558 830	87-33
558 831	85-35
558 900	35-21
558 900	36-19
558 908	66-29
558 912	36-21
558 912	36-22
558 916	86-23
558 917	86-69
559 081	65-52
559 082	65-53
560 774	122-25
560 775	122-24
560 951	90-11
565 146	88-40
565 288	99-60
565 416	107-8
565 441	42-24
565 516	101-21
565 523	111-30
565 576	42-23
565 578	42-24
571 056	86-46
571 069	33-23
571 087	114-13
571 087	118-48
571 131	30-17
571 136	27-16
571 140	65-90
571 149	29-6a
571 149	31-12
571 162	28-26
571 162	101-50
571 162	107-19
579 306	23-25
579 307	24-57
579 307	24-58
579 310	20-59
579 311	24-60
579 313	24-61
579 314	24-62
579 315	19A-7
579 400	23-25
579 401	24-57
579 403	24-58
579 404	20-59
579 405	24-60
579 407	24-61
579 408	24-62
579 409	19A-7
579 420	32B-3a
579 421	32B-3a
579 422	32B-3a
579 423	32B-3a
579 424	32B-3a
579 474	19A-5
579 474	20-62
579 474	24-65c
579 474	32B-7
579 500	24-30
579 501	24-30
579 502	24-30
579 503	24-30
579 507	19A-5
579 507	20-62a
579 507	24-65c
579 507	32B-7
579 508	19A-5
579 508	20-62a
579 508	24-65c
579 508	32B-7
579 509	19A-5
579 509	20-62a
579 509	24-65c
579 509	32B-7
579 510	19A-5
579 510	20-62a
579 510	24-65c
579 510	32B-7
579 515	24-30
579 516	24-30
579 517	24-30
579 518	24-30
579 519	23-25
579 520	23-25
579 521	23-25
579 522	23-25
579 523	24-57
579 524	24-57
579 525	24-57

Part Number	Figure and Index No.
579 526	24-57
579 531	24-58
579 532	24-58
579 533	24-58
579 534	24-58
579 535	20-59
579 536	20-59
579 537	20-59
579 538	20-59
579 539	24-60
579 540	24-60
579 541	24-60
579 542	24-60
579 547	24-61
579 548	24-61
579 549	24-61
579 550	24-61
579 551	24-62
579 552	24-62
579 553	24-62
579 554	24-62
579 555	19A-7
579 556	19A-7
579 557	19A-7
579 558	19A-7
579 597	24-60
579 598	24-60
579 599	24-60
579 600	24-60
579 601	24-60
579 607	24-60
579 608	24-60
579 609	24-60
579 670	24-60
579 672	24-60
579 754	24-62
579 755	24-62
579 756	24-62
579 757	24-62
579 758	24-62
579 759	24-62
579 772	24-61
579 773	24-61
579 774	24-61
579 775	24-61
579 776	24-61
579 777	24-61
579 778	19-46
579 779	19-46
579 780	19-46
579 781	19-46
579 782	19-46
579 783	19-46

Part Number	Figure and Index No.
579 784	24-60
579 785	24-60
579 786	24-60
579 787	24-60
579 788	24-60
579 789	24-60
579 790	20-59
579 791	20-59
579 792	20-59
579 793	20-59
579 794	20-59
579 795	20-59
579 796	24-58
579 797	24-58
579 798	24-58
579 799	24-58
579 800	24-58
579 801	24-58
579 802	24-57
579 803	24-57
579 804	24-57
579 805	24-57
579 806	24-57
579 807	24-57
579 914	23-25
579 915	23-25
579 916	23-25
579 917	23-25
579 918	23-25
579 919	23-25
580 414	24-57
580 415	24-57
580 416	24-57
580 417	24-57
580 418	24-57
580 419	24-57
580 420	24-58
580 421	24-58
580 422	24-58
580 423	24-58
580 424	24-58
580 425	24-58
580 426	20-59
580 427	20-59
580 428	20-59
580 429	20-59
580 430	20-59
580 431	20-59
580 432	22-17
580 433	22-17
580 435	22-17
580 436	22-17
580 437	22-17

Part Number	Figure and Index No.
580 444	24-60
580 445	24-60
580 446	24-60
580 447	24-60
580 448	24-60
580 449	24-60
580 450	19-46
580 451	19-46
580 452	19-46
580 453	19-46
580 454	19-46
580 455	19-46
580 456	24-61
580 457	24-61
580 458	24-61
580 459	24-61
580 460	24-61
580 461	24-61
580 462	24-62
580 463	24-62
580 464	24-62
580 465	24-62
580 466	24-62
580 467	24-62
580 699	23-25
580 703	20-59
580 709	19A-7
580 731	19A-5
580 731	20-62a
580 731	24-65c
580 731	32B-7
580 732	24-57
580 734	24-60
580 760	24-30
580 761	24-30
581 025	74-2
581 035	33-30
581 126	113-1b
581 177	19-72
581 177	20-78
581 312	122-33
581 330	97-7
581 332	97-8
581 342	34-36
581 489	19-68
581 489	20-39
581 502	34-36
581 503	34-37
581 704	90-26
581 705	90-27
581 928	17-51
581 928	18-52
581 928	19-60

Part Number	Figure and Index No.
581 964	34-36
581 971	34-37
582 172	103-31
582 199	102-25
582 250	34-38
582 536	91-24
583 228	87-12
584 006	111-36
584 140	58A-21
585 015	111-22
587 221	19-65
587 221	20-37
587 299	29-9
587 299	31-16
587 381	19A-25
587 384	68-23
587 396	62-24
587 398	19A-19
587 404	31-31
587 404	31-38
587 594	58A-17
587 594	58A-21
587 807	112-10
587 808	112-11
587 808	112-12
587 808	112-13
587 809	112-14
587 844	107-14
587 847	65-39
587 862	96-2b
587 903	107-24
587 923	120-5
587 952	110-13
587 961	66-52
587 961	67-68
587 961	67A-68
587 961	68-66
587 990	66-57
587 990	67-73
587 990	67A-64
587 990	68-59
587 990	122-17
588 011	110-14
588 011	110B-10
588 030	110A-6
588 109	28-25
588 110	107-3
588 110	107-25
588 110	119A-39
588 356	112-17
588 391	85-37
588 432	101-45
588 436	85-52

Part Number	Figure and Index No.
588 469	66-56
588 469	67-72
588 469	67A-65
588 469	68-49
589 688	43-10
591 026	25-4
591 027	25-4
591 028	25-4
591 030	25-4
591 031	25-3
591 032	25-3
591 033	25-3
591 035	25-3
591 042	25-1
591 043	25-1
591 044	25-1
591 046	25-1
591 047	25-1
591 048	25-1
591 049	25-1
591 051	25-1
591 052	25-2
591 053	25-2
591 054	25-2
591 056	25-2
591 057	25-2
591 058	25-2
591 059	25-2
591 061	25-2
591 062	25-5
591 063	25-5
591 064	25-5
591 066	25-5
591 067	25-15
591 068	25-15
591 069	25-15
591 071	25-15
591 072	25-6
591 073	25-6
591 074	25-6
591 076	25-6
591 077	25-11
591 078	25-11
591 079	25-11
591 081	25-11
591 082	25-11
591 083	25-11
591 084	25-11
591 086	25-11
591 087	25-10
591 088	25-10
591 089	25-10
591 091	25-10
591 092	25-10
591 093	25-10
591 094	25-10
591 096	25-10
591 097	25-12
591 098	25-12
591 099	25-12
591 101	25-12
591 102	25-8
591 103	25-8
591 104	25-8
591 106	25-8
591 107	25-8
591 108	25-8
591 109	25-8
591 111	25-8
591 112	25-12
591 113	25-12
591 114	25-12
591 116	25-12
591 117	25-9
591 118	25-9
591 119	25-9
591 121	25-9
591 122	25-13
591 123	25-13
591 124	25-13
591 126	25-13
591 132	25-7
591 133	25-7
591 134	25-7
591 136	25-7
591 137	25-7
591 138	25-7
591 139	25-7
591 141	25-7
591 405	25-25
591 406	25-25
591 407	25-25
591 409	25-25
591 410	25-24
591 411	25-24
591 412	25-24
591 414	25-24
591 415	25-24
591 416	25-24
591 417	25-24
591 418	25-24
591 419	25-25
591 420	25-25
591 421	25-25
591 422	25-25
591 483	25-24
591 484	25-24
591 485	25-25
591 486	25-25
591 501	25-4
591 502	25-5
591 503	25-3
591 504	25-3
591 509	25-1
591 510	25-1
591 511	25-1
591 512	25-1
591 513	25-2
591 514	25-2
591 515	25-2
591 517	25-5
591 518	25-5
591 519	25-15
591 520	25-15
591 521	25-6
591 522	25-6
591 523	25-12
591 524	25-12
591 525	25-12
591 526	25-12
591 528	25-13
591 529	25-13
591 531	25-7
591 532	25-7
591 533	25-7
591 534	25-7
591 539	25-25
591 540	25-25
591 541	25-24
591 542	25-24
591 553	25-8
591 554	25-8
591 555	25-8
591 556	25-8
591 557	25-10
591 558	25-10
591 559	25-10
591 560	25-10
591 563	25-9
591 564	25-9
591 565	25-11
591 566	25-11
591 567	25-11
591 568	25-11
591 569	25-6
591 600	25-24
591 601	25-24
591 602	25-24
591 603	25-24
591 604	25-25
591 605	25-25
591 606	25-25
591 607	25-25
591 620	25-4
591 621	25-4
591 622	25-4
591 623	25-4
591 624	25-3
591 625	25-3
591 626	25-3
591 627	25-3
591 628	25-1
591 629	25-1
591 630	25-1
591 631	25-1
591 632	25-1
591 633	25-1
591 634	25-1
591 635	25-1
591 636	25-2
591 637	25-2
591 638	25-2
591 639	25-2
591 640	25-2
591 641	25-2
591 642	25-2
591 643	25-2
591 644	25-5
591 645	25-5
591 646	25-5
591 647	25-5
591 648	25-15
591 649	25-15
591 650	25-15
591 651	25-15
591 652	25-6
591 653	25-6
591 654	25-6
591 655	25-6
591 656	25-12
591 657	25-12
591 658	25-12
591 659	25-12
591 660	25-12
591 661	25-12
591 662	25-12
591 663	25-12
591 668	25-13
591 669	25-13
591 670	25-13
591 671	25-13
591 672	25-7

Part Number	Figure and Index No.
591 673	25-7
591 674	25-7
591 675	25-7
591 676	25-7
591 677	25-7
591 678	25-7
591 679	25-7
591 688	25-25
591 689	25-25
591 690	25-25
591 691	25-25
591 692	25-24
591 693	25-24
591 694	25-24
591 695	25-24
591 716	25-8
591 717	25-8
591 718	25-8
591 719	25-8
591 720	25-8
591 721	25-8
591 722	25-8
591 723	25-8
591 724	25-10
591 725	25-10
591 726	25-10
591 727	25-10
591 728	25-10
591 729	25-10
591 730	25-10
591 731	25-10
591 744	25-9
591 745	25-9
591 746	25-9
591 747	25-9
591 748	25-6
591 749	25-6
591 750	25-6
591 751	25-6
591 768	25-11
591 769	25-11
591 770	25-11
591 771	25-11
591 772	25-11
591 773	25-11
591 774	25-11
591 775	25-11
593 101	93-29
593 101	93-30
593-101	96-32
594 003	58A-17
594 003	58A-21
596 032	114-18
596 059	111-9
596 118	111-13
596 138	109-3
596 181	109-3
596 235	119-24
596 235	119A-24
596 236	119-20
596 236	119A-20
596 244	119-46
596 244	119A-40
596 332	111-33
596 605	121-1
596 664	111-33
596 755	119-14
596 755	119A-14
597 206	122-2
597 207	122-4
597 208	122-3
597 257	110B-3
597 426	121-1
597 461	110B-1
598 395	45-27
598-395	45-16
681 145	19-26
681 145	20-13
687 258	33-11
687 258	34-20
687 259	33-11
687 259	34-17
687 262	33-12
687 262	34-21
687 263	33-12
687 264	34-62
687 271	34-11
687 272	33-15
687 275	34-19
687 276	33-14
687 276	34-19
687 277	34-13
688 164	117-19
688 164	119-45
688 164	119A-39
688 178	101-11
690 609	45-32
690 609	45-33
690 609	47-18
690 609	47-29
690 609	50-35
690 609	50-36
690 609	50-40
690 609	50-60
690 609	50-67
690 609	50-69
690 609	60-43
690 609	60-45
690 609	65-73
690 609	65-78
690 609	65-92b
690 611	45-25
690 611	45-26
690 611	45-31
690 611	50-12
690 611	50-51
690 611	60-44
690 611	65-75
690 612	45-32
690 612	45-33
690 612	45-43
690 612	45-46
690 612	50-20b
690 612	50-40
690 612	50-52
690 612	50-55
690 612	50-69
690 612	60-49
690 613	45-25
690 613	45-30
690 613	48-37
690 613	50-49
690 613	50-51
690 613	50-53
690 613	50-64
690 617	60-46
690 619	19-15
690 619	50-50
690 621	81-11
690 622	65-76
690 622	65-77
690 628	50-50
690 629	50-42
690 629	50-48
690 629	60-18
690 629	65-1c
690 629	68-60
690 630	60-48
690 630	65-72
690 631	19-13
690 640	19-25
690 640	19-27
690 664	50-41
690 668	19A-26
690 817	34-71
691-220	65-62
750 063	52-6
751 118	34-23
751 118	82-15
751 118	83-26
751 201	98-32
751 201	99-30
751 201	99-38
751 201	106-12
751 202	98-29
751 202	99-30
751 202	99-35
751 202	106-12
751 203	98-22
751 203	99-21
751 262	116-4
751 276	118-1a
751 278	114-2
751 278	118-10
751 283	117-2
751 284	118-5
751 287	119-11
751 300	119-18
751 300	119A-18
751 301	118-1b
751 312	106-7
751 314	119-10
751 314	119-10a
751 314	119A-10
751 316	110-3
751 318	110-4
751 319	110-5
751 342	119-12
751 342	119-12a
751 347	119-11
751 347	119A-11
751 369	55-8
751 381	98-28
751 381	98-31
751 381	99-31
751 381	99-34
751 381	99-37
751 381	106-13
751 384	52-11
751 405	52-11
751 412	116-23
751 453	33-19
751 461	117-4a
751 461	118-8b
751 489	52-6
751 489	56-7
751 494	52-3
751 494	52-5
751 494	56-3
751 494	56-6
751 525	116-12
751 772	56-9

Part Number	Figure and Index No.
751 796	86-7
751 796	88-35
751 799	86-3
751 815	35-6
751 815	36-7
751 819	52-9
751 820	84-19
751 859	35-4
751 859	36-4
751 871	86-5
751 871	88-33
751 872	86-2
751 889	60-7
751 897	114-7
751 897	115-12
751 906	118-17
751 906	119-53
751 906	119A-43
751 954	116-11
751 955	103-5
751 956	103-13
751 987	117-9
751-810	56-12
751-912	33-53
751-912	34-25
752 020	84-2
752 301	19-55
752 301	20-22
752 307	98-38
752 307	99-63
752 328	100-21
752 333	116-8
752 342	61-7
752 342	61-11
752 511	84-6
752 513	84-26
752 533	84-12
752 534	84-7
752 571	52A-13
752 571	52B-10
752 584	64-39
752 585	50-2b
752 585	64-41
752 595	50-2a
752 596	50-2c
752 826	61-8
752 826	61-12
752 830	52-10
752 830	56-10
752 855	60-16
752 855	64-17
752 882	52-7
752 892	100-20

Part Number	Figure and Index No.
752 965	61-19
752 966	61-18
753 039	103-15
753 085	44-14
753 128	52-2
753 129	52-4
753 172	60-10
753 172	64-11
753 375	103-3
753 376	103-10
753 380	103-9
753 381	60-14
753 381	64-15
753 407	61-14
753 430	61-17
753 431	98-21
753 431	99-20
753 448	52-6
753 460	118-21
753 461	84-3
753 463	84-15
753 464	84-20
753 465	84-20
753 473	56-15
753 692	Misc.-
753 693	118-1
753 721	114-1
753 721	117-1
753 721	118-2
753 721	118-3
753 850	61-20
753 876	116-9
753 880	116-25
753 910	35-3
753 910	36-3
753 917	64-2
753 923	56-18
753 936	61-2
753 956	60-4
753 977	114-4
753 977	118-23
753 979	118-24
753 980	114-8
753 980	115-4
753 980	117-6
753 980	118-14
753 980	119-19
753 980	119-29
753 980	119A-19
754 366	116-5
754 575	35-1
754 575	36-1
754 614	56-4

Part Number	Figure and Index No.
754 643	56-4
754 804	52-9
754 814	84-19
754 815	84-19
754 816	86-7
754 816	88-35
754 816	89-15
754 826	84-19
754 827	108-5
754 848	64-42
754 855	52A-10
754 856	52B-6
755 028	64-32
755 042	106-5
755 048	52-3a
755 049	91-9a
755 049	91-19a
755 075	99-32a
755 075	106-15
755 076	99-32b
755 076	106-16
755 082	64-52
755 119	91-3a
755 200	106-6
755 222	84-2
755 232	108-9
755 271	108-18
755 272	42-23
755 427	33-3
755 427	34-8
755 428	33-4
755 428	34-5
755 432	115-1
755 432	116-1
755 472	119-14
755 800	84-9
755 810	64-8
755 846	103-4
755 857	64-12
755 858	64-13
755 882	60-19
755 882	64-5
755 885	61-9
755 886	61-10
755 887	61-3
755 916	64-3
755 917	64-7
755 919	86-6
755 919	88-34
755 919	89-17
755 929	56-11
755 930	56-13
755 932	84-8

Part Number	Figure and Index No.
755 934	84-16
755 935	84-30
755 943	103-7
755 944	103-11
755 945	103-12
755 948	60-5
755 949	60-6
755 950	60-20
755 964	52-14
755 968	84-14
755 972	84-21
755 990	118-13
755 992	84-18
755 993	84-18
755 994	84-28
755 996	50-2d
755 997	54-42
755 998	50-2f
755 999	56-8
756 007	52-14
756 008	52-10
756 016	64-54
756 018	64-53
756 019	64-30
756 035	86-11
756 035	88-39
756 036	86-8
756 036	88-36
756 037	99-27
756 037	106-9
756 044	79-6
756 052	114-2a
756 052	118-10a
756 053	50-2e
756 053	54-42a
756 060	108-11
756 061	108-13
756 066	103-17
756 067	103-19
756 117	60-15
756 117	64-16
756 118	60-17
756 118	64-6
756 118	64-27
756 129	52-8
756 159	103-2
756 186	34-13
756 250	103-6
756 257	116-29
756 295	84-11
756 398	110-1
756 607	84-22
756 609	56-17

Part Number	Figure and Index No.
756 616	33-55
756 616	34-27
756 620	64-23
756 621	64-26
756 621	64-55
756 622	64-28
756 622	64-50
756 665	52-2
756 665	56-5
756 666	52-4
756 666	56-2
756 667	52-2
756 668	52-4
756 673	119-73
756 673	119A-56
756 679	56-2
756 680	56-5
756 685	52A-12
756 685	52B-9
756 686	52B-2
756 687	52A-4
756 688	52A-2
756 716	116-10
756 720	116-6
756 737	116-24
756 757	103-16
756 759	103-20
756 761	103-22
756 790	Misc.-
756 810	Misc.-
756 947	Misc.-
756 950	Misc.-
756 951	Misc.-
756 953	Misc.-
757 005	Misc.-
757 022	Misc.-
757 023	Misc.-
757 023	20-70
757 026	Misc.-
757 031	Misc.-
757 040	Misc.-
757 043	Misc.-
757 051	118-8
757 052	117-3
757 052	117-11
757 052	118-7
757 052	118-40
757 052	119-17
757 052	119A-17
757 065	103-7
757 079	Misc.-
757 085	Misc.-
757 086	Misc.-
757 095	Misc.-
757 110	Misc.-
757 112	Misc.-
757 137	Misc.-
757 139	Misc.-
757 142	103-18
757 143	103-21
757 152	Misc.-
757 158	86-4
757 163	Misc.-
757 165	Misc.-
757 184	Misc.-
757 195	Misc.-
757 196	Misc.-
757 207	61-5
757 208	61-6
757 216	60-11
757 217	60-12
757 249	84-17
757 296	118-24a
757 302	84-25
757 310	33-54
757 310	34-26
757 311	103-14
757 314	16-45
757 314	123-2
757 314	124-2
757 316	64-19
757 317	64-20
757 318	64-29
757 318	64-49.
757 326	Misc.-
757 336	84-18.
757 342	Misc.-
757 386	108-3
757 386	108-21
757 387	108-4
757 387	108-19
757 388	108-14
757 389	108-15
757 390	108-16
757 392	108-6
757 437	64-24
757 456	119-9
757 456	119A-9
757 459	119-60
757 459	124-64
757 479	64-37
757 480	64-34
757 483	61-3
757 484	61-9
757 485	61-5
757 539	118-4
757 551	118-9
757 555	84-23
757 556	84-23
757 557	84-29
757 558	84-32
757 559	84-33
757 579	114-1a
757 579	115-15
757 579	117-1a
757 579	118-2a
757 579	118-3a
757 579	119-2
757 579	119-6
757 579	119A-2
757 580	64-21
757 580	64-56
757 581	117-4
757 581	118-8a
757 590	118-1
757 592	114-3a
757 595	114-1
757 595	115-14
757 595	117-1
757 595	118-3
757 596	118-2
757 597	101-11
757 632	86-9
757 632	88-37
757 718	44-15
757 719	108-22
757 721	108-17
757 745	103-6
757 746	103-8
757 762	106-2
757 790	36-7a
757 807	118-6
757 817	118-25
757 818	118-26
757 819	118-27
757 820	118-28
757 827	84-31
757 828	84-31
757 831	52-3
757 831	52-5
757 855	114-3
757 863	114-5
757 863	115-13
757 863	117-7
757 863	118-15
757 863	119-48
757 863	119A-42
757 878	115-5
757 898	114-19
757 899	35-29
757 899	36-26
757 905	118-39
757 913	115-6
757 959	119-26
757 981	103-23
757 995	84-24
758 001	119-30
758 002	117-13
758 023	117-2
758 024	117-4b
758 026	119-7
758 026	119A-7
758 028	119-25
758 052	119-26
758 052	119A-26
758 071	119-21
758 072	119-22
758 073	119-23
758 075	119-28
758 078	117-2
758 079	119-29a
758 079	119A-29
758 092	110A-3
758 093	61-2
758 097	32B-3
758 105	118-18
758 106	118-19
758 107	118-20
758 111	84-4
758 144	84-13
758 145	84-13
758 146	84-13
758 176	86-10
758 176	88-38
758 181	115-8
758 181	119-13
758 181	119-13a
758 188	115-2
758 204	84-20
758 209	110-2
758 218	84-13
758 219	84-13
758 220	84-13
758 224	108-7
758 225	108-10
758 249	103-9
758 251	103-24
758 266	110-6
758 267	110-7
758 280	84-35
758 281	110-2
758 282	84-34

Part Number	Figure and Index No.
758 328	119-34
758 345	115-16
758 345	117-24
758 345	119-65
758 346	115-17
758 346	117-12
758 346	119-66
758 348	119-32a
758 348	119A-30
758 349	119-35a
758 350	119-67
758 350	119A-52
758 351	119-53
758 351	119-68
758 352	119-69
758 353	119-70
758 354	119-71
758 354	119A-54
758 355	119-64
758 355	119A-49
758 364	110-2
758 366	103-25a
758 368	103-24
758 369	103-13
758 391	52B-4
758 392	52A-6
758 393	52B-8
758 394	52A-11
758 397	51-48
758 402	98-38
758 402	99-63
758 404	119-35a
758 404	119A-31
758 405	119-78
758 405	119A-61
758 416	119-79
758 416	119A-62
758 417	119-77
758 417	119A-60
758 422	84-20
758 452	110B-2
758 453	110B-5
758 456	52-11
758 457	64-58
758 471	108-8
758 528	110A-2
758 534	86-12
758 534	89-17a
758 579	119A-6
760 159	Misc.-
760 162	Misc.-
760 189	Misc.-
760 196	Misc.-
760 210	Misc.-
760 296	Misc.-
760 297	Misc.-
760 303	Misc.-
760 304	Misc.-
760 315	Misc.-
760 365	Misc.-
760 451	Misc.-
760 457	Misc.-
760 457	9-20
760 461	Misc.-
760 462	Misc.-
760 480	Misc.-
760 481	Misc.-
760 508	Misc.-
760 515	Misc.-
760 531	Misc.-
760 532	Misc.-
760 540	Misc.-
760 560	Misc.-
760 664	Misc.-
760 706	44-10
760 729	Misc.-
760 740	Misc.-
760 742	Misc.-
760 808	Misc.-
760 822	Misc.-
760 842	Misc.-
760 876	Misc.-
760 885	Misc.-
760 889	Misc.-
760 891	Misc.-
760 895	86-4
760 895	88-32
760 899	119-8
760 899	119A-8
760 910	Misc.-
760 928	103-8
760 972	Misc.-
760 972	21-28
760 975	Misc.-
760 984	67-18a
760 994	Misc.-
760 997	Misc.-
760 998	Misc.-
761 008	Misc.-
761 009	Misc.-
761 036	Misc.-
761 039	Misc.-
761 039	96-2a
761 042	Misc.-
761 051	Misc.-
761 052	Misc.-
761 065	Misc.-
761 076	Misc.-
761 077	2-22
761 077	8-20
761 087	Misc.-
761 091	Misc.-
761 093	Misc.-
761 105	Misc.-
761 110	Misc.-
761 118	64-51
761 138	65-2a
761 150	28-4
761 150	43-3
761 156	99-28
761 156	106-10
761 157	99-29
761 157	106-11
761 158	99-26
761 158	106-8
761 159	99-26
761 159	106-8
761 161	106-4
761 162	99-32
761 162	106-14
761 173	119-47
761 173	119A-41
761 189	106-2
761 190	106-4
761 191	99-26
761 192	99-26
761 197	61-7
761 197	61-11
761 198	120-3
761 222	106-14
761 301	32B-4
761 505	119-58
761 519	44-12
761 903	108-12
761 913	103-25
761 939	110-1
761 967	110-1
761 970	48-5
761 972	48-5
761 972	53-43
761 975	55-47
761 978	51-45
761 994	48-5
761 995	53-43
761 996	55-47
762 003	106-10
762 030	110A-1
762 226	96-2c
762 244	108-2
762 245	115-14
762 245	117-1
762 245	119-1
762 245	119A-1
762 246	119-3
762 247	119-5
762 251	119-3
762 251	119A-3
762 252	119-5
762 275	64-38
762 276	64-35
762 277	64-36
762 357	110B-6
762 387	119A-5
762 503	86-5
762 503	88-33
762 503	89-16
762 508	108-20
762 531	64-44
762 558	52A-8
762 559	52A-7
762 560	52B-5
762 561	52B-7
762 562	52A-9
762 585	64-48
762 586	64-59
762 587	64-46
763 003	19-48b
763 003	19A-4
763 003	20-62
763 003	24-65b
763 003	32B-9
763 004	110A-4
763 008	119-12a
763 008	119A-12
763 019	110B-4
763 215	52B-3
763 216	52A-3
763 216	52A-5
763 220	119-80
763 221	119-22
763 222	119-21
763 222	119A-21
763 223	119-25
763 223	119A-25
763 224	119-28
763 225	119-23
763 225	119A-23
763 228	119-22
763 228	119A-22
763 270	119-28
763 270	119A-28
763 287	52-3

Part Number	Figure and Index No.
763 287	52-5
763 418	119-60
763 418	119A-45
763 418	124-64
763 450	64-57
763 451	64-47
763 469	99-67
763 469	106-1
763 712	52A-2
763 713	52A-4
763 718	52-2
763 719	52-4
763 814	28-25
763 815	107-3
763 815	107-25
763 842	Misc.-
763 846	Misc.-
763 848	2-14
763 859	68-33
763 870	Misc.-
763 874	Misc.-
763 887	Misc.-
763 890	Misc.-
763 911	124-81
763 916	77-23
763 916	78-24
763 916	80-25
763 916	81-32
763 931	Misc.-
763 934	Misc.-
763 961	Misc.-
763 968	Misc.-
763 969	Misc.-
763 971	Misc.-
763 978	Misc.-
764 011	Misc.-
764 092	103-37
764 135	Misc.-
764 136	Misc.-
764 785	Misc.-
764 982	Misc.-
764 998	Misc.-
765 106	Misc.-
765 186	Misc.-
765 186	Misc.-
765 186	33-16
765 199	Misc.-
765 373	Misc.-
765 384	Misc.-
765 384	Misc.-
765 385	Misc.-
765 385	Misc.-
766 222	Misc.-
766 239	Misc.-
766 244	Misc.-
766-240	90-18
766-240	90-28
767 310	Misc.-
767 310	Misc.-
767 384	Misc.-
767 397	Misc.-
767 397	Misc.-
767 398	Misc.-
767 398	Misc.-
761 021	Misc.-
765 363	Misc.-
766 253	Misc.-

3F17 THRU 3L24
INTENTIONALLY LEFT BLANK