

PA-18 *SUPER CUB*

PARTS CATALOG

CARD 1 OF 1

PA-18

PA-18A

PIPER AIRCRAFT CORPORATION

(PART NUMBER 752 451) 1 A1

AEROFICHE EXPLANATION AND REVISION STATUS

The Parts Catalog information incorporated in this set of Aerofiche cards has been arranged in accordance with the general specifications of Aerofiche adopted by the General Aircraft Manufacturer's Association.

Conversion of Aerofiche alpha/numeric code numbers:
First number is the Aerofiche card identifier.
Letter is the horizontal line reference per card.
Second number is the vertical line reference per card.
Example: 2J16 = Aerofiche card number two of given set, Grid location J16.

To aid in locating the various sections and related information desired, the following is provided:

A complete Catalog Table of Contents is given at Grid 1A8 of Aerofiche card number 1 of this set. Each additional card in this set will have a Table of Contents for all sections on that particular card. This table will start at Grid A3.

REVISIONS

The information compiled in this Aerofiche Parts Catalog will be kept current by revisions distributed periodically. These revisions will supersede all previous revisions and will be complete Aerofiche card replacements and shall supersede Aerofiche cards of the same number in the set.

Current Revisions to this PA-18 Parts Catalog issued March 5,1973 are as follows:

752 451(PR751121) .....Dated November 1975
752 451 (PR770121) .....Dated January 1977
752 451 (PR770907) .....Dated September 1977
752 451 (PR780916) .....Dated September 1978
752 451 (PR790817).....Dated August 1979
752 451 (PR801113) .....Dated November 1980
752 451 (PR811104) .....Dated November 1981
752 451 (PR821109) .....Dated November l992
752 451 (PR070310).....Dated March 10, 2007
752 451 (PR080310) Dated March 10, 2008

NOTE: Refer to the last card of the Piper-Parts Price List-Aerofiche for a check list of current revision dates and card effectivities for this parts catalog.

INTRODUCTION

This Illustrated Parts Catalog is designed to provide simple but positive identification of replacement parts for the Piper Super Cub (PA-18) Models 95, 105, 125, 135 and 150; and the Piper Agricultural (PA-18A) Models 125, 135 and 150 manufactured by the Piper Aircraft Corporation of Lock Haven, Pennsylvania.

NOTE: UNDER NO CIRCUMSTANCES SHALL THIS CATALOG BE USED FOR RIGGING AND INSTALLATION PURPOSES.

It is suggested that this catalog be thoroughly studied to determine its arrangement prior to its utilization.

1. The catalog is divided into eleven (11) major sections described as follows:
   a. Sections I to X inclusive contain all replacement parts for the complete airplane. Each section is subdivided and each division includes an illustration and a parts listing.
   b. Section XI is the Miscellaneous Group. This group includes a listing of the Optional Equipment Kits.

2. The following is a brief explanation of the columns in the parts listing:
   a. The "FIGURE AND INDEX" column indicates the illustration figure number and its parts index number. Example: (2-1), the 2 is the figure number and the 1 is the index number. The figure number appears only at the top of each parts listing page or at the beginning of each new parts listing.
   b. The "PART NUMBER" column contains the identifying number of the replacement part and this number must be shown on all Parts Orders.
   c. The "CODE" column is for the purpose of indicating special uses of the part. An explanation of the letter code used is shown below each listing.
   d. The "NOMENCLATURE" column indicates the part name. This name must be shown on all Parts Orders.
   e. The "NO. REQ." (Number Required) column represents the total quantity of parts used per aircraft per figure when the part is not indented and the quantity of parts used per assembly when the part is indented. The symbol "AR" listed in this column means "As Required".
   f. The "SERIAL NUMBERS AFFECTED" column indicates the part application by airplane serial number.

Indention Example: Indentations of listings in the "Nomenclature column" indicate "assemblies and "components" or "parts", in order of their indentations.

EXAMPLE

Figure and Index Number	Part Number	Code	NOMENCLATURE	No. Req.	SERIAL NUMBERS AFFECTED
			DOOR ASSEMBLY - Baggage compartment	1	
			* FRAME ASSEMBLY - Baggage compartment door	1	
			* * HINGE ASSEMBLY - Baggage door	1	
			* * CLIP - Baggage door spring	1	

This listing is interpreted as follows:

If the DOOR ASSEMBLY (not indented) is ordered, it will include the three items listed under that item.

If the FRAME ASSEMBLY (indented one space) is ordered, it will include the two items listed under the sub-assembly.

If you want only a HINGE ASSEMBLY or CLIP, you order only that item.

3. The "ATTACHING PARTS" such as nuts, bolts, screws, etc., that are available as commercial hardware items, are not generally supplied by the Piper Aircraft Corporation. The catalog lists, for your convenience, those attaching parts required for main assemblies and installation. The identifying number for these parts appears after the part name.

4. All items of Optional Equipment are contained in the parts list in their proper sequence and sections. These items were not marked optional, since they are fully identified by their descriptions.

HOW TO IDENTIFY A PART IF YOU KNOW WHAT IT LOOKS LIKE AND KNOW WHERE IT IS LOCATED

1. Refer to Figure 1 to determine the Section Number in which the part is located.

2. Refer to the Table of Contents and locate the section. Note the figure numbers that illustrate the various subgroups of this main section.
   a. Select the figure title you think might contain the part you wish to identify and turn to the grid (page) specified.

3. Find the part on the illustration and note the index number.

   NOTE: If you don't find the part on this illustration, try another figure in this group.

4. Refer to the "Figure and Index Number" in the Parts Listing for complete description of the part.

HOW TO ORDER PARTS

In ordering parts for your Piper Airplane, observe the following instructions which will aid in your getting the right parts required without delay:

a. Place your order with the distributor or dealer for your territory, since parts are available only through our distributor organization.
b. Always specify the model and serial number of your airplane.
c. Always specify Part Number, Name, Type and Quantity Required.
d. Specify the method of shipment - freight, express, parcel post, air express, air freight or air parcel post. Where the nature of the shipment requires it or when no instructions are given, we reserve the right to ship the most suitable way.

GENERAL INFORMATION

a. Shortages

All orders are checked and rechecked before leaving our Shipping Department. A packing slip is enclosed with the shipment and claims for errors or shortages must be made within three days after receipt of orders.

b. Returned Goods

No material should be returned to us without first securing our written permission. Material sent in without notice will be held at the owner's risk for thrity (30) days and will then be disposed of as we see fit.

Transportation charges must be PREPAID on returned goods or the shipment will be refused.

c. Transportation Liabilities

The Piper Aircraft Corporation cannot be held liable for damages to parts in transit from the factory. If a shipment is received in a damaged condition, have the delivery man or Transportation Company make a notation of the damage and file your claim with the Carrier. In case of concealed damage, do not attempt to remove the part from the shipping container, or endeavor to repair the damage, but call the Carrier and have his Claim Agent inspect the damage before filing your claim with the Carrier.

PA-18 AND PA-18A SERIAL NUMBER INFORMATION

The following information should be kept in mind when ordering from this catalog:

a. The serial numbers of the aircraft covered by this Parts Catalog are as follows:

(1) Serial numbers of the 1950 PA-18 Models 95 and 105 are 18-1 to 18-548 inclusive.
(2) Serial numbers of the 1951 PA-18 Models 95 and 125 are 18-549 to 18-1214 inclusive.
(3) Serial numbers of the 1952 PA-18 Models 95, 125 and 135 are 18-1215 to 18-1969 inclusive.
(4) Serial numbers of the 1953 PA-18 Models 95, 105, and 135 are 18-1970 to 18-3013 inclusive.
(5) Serial numbers of the 1952 PA-18A Models 125 and 135 are 18-1262 to 18-2146 inclusive.
(6) Serial numbers of the 1953 PA-18A Model 135 are 18-2147 to 18-3013 inclusive.
(7) Serial numbers of the 1954 PA-18 Models 95 and 135 are 18-3014 to 18-3770 inclusive, and 18-3772 to 18-3780 inclusive.
(8) Serial numbers of the 1954 PA-18A Model 135 are 18-3020 to 18-3780 inclusive.
(9) Serial numbers of the 1955 PA-18 Models 95, 135 and 150 are 18-3771, 18-3781 to 18-4617 inclusive.
(10) Serial numbers of the 1955 PA-18A Models 135 and 150 are 18-3781 to 18-4617 inclusive.
(11) Serial numbers of the 1956 PA-18 Models 95 and 150 are 18-4618 to 18-5294 inclusive.
(12) Serial numbers of the 1956 PA-18A Model 150 are 18-4619 to 18-5294 inclusive.
(13) Serial numbers of the 1957 PA-18 Models 95 and 150 and PA-18A Model 150 are 18-5295 to 18-5803 inclusive and 18-5805 to 18- 6115 inclusive.
(14) Serial numbers of the 1958 PA-18 Models 95 and 150 and PA-18A Model 150 are 18-5804 and 18-6116 to 18-6684 inclusive.
(15) Serial numbers of the 1959 PA-18 Models 95 and 150 and PA-18A Model 150 are 18-6685 to 18-7172 inclusive.
(16) Serial numbers of the 1960 PA-18 Models 95 and 150 and PA-18A Model 150 are 18-7173 to 18-7520 inclusive.
(17) Serial numbers of the 1961 PA-18 Model 95 are 18-7521 to 18-7632 inclusive.
(18) Serial numbers of the 1961 PA-18 Model 150 are 18-7521 to 18-7746 inclusive.
(19) Serial numbers of the 1962 PA-18 Model 150 are 18-7747 to 18-7871 inclusive.
(20) Serial numbers of the 1963 PA-18 Model 150 are 18-7872 to 18-8045 inclusive.
(21) Serial numbers of the 1964 PA-18 Model 150 are 18-8046 to 18-8199 inclusive.
(22) Serial numbers of the 1965 PA-18 Model 150 are 18-8200 to 18-8338 inclusive.
(23) Serial numbers of the 1966 PA-18 Model 150 are 18-8339 to 18-8464 inclusive.
(24) Serial numbers of the 1967 PA-18 Model 150 are 18-8465 to 18-8601 inclusive.
(25) Serial numbers of the 1968 PA-18 Model 150 are 18-8602 to 18-8743 inclusive.
(26) Serial numbers of the 1969 PA-18 Model 150 are 18-8744 to 18-8851 inclusive.
(27) Serial numbers of the 1970 PA-18 Model 150 are 18-8852 to 18-8919 inclusive.
(28) Serial numbers of the 1971 PA-18 Model 150 are 18-8920 to 18-8963 inclusive.
(29) Serial numbers of the 1972 PA-18 Model 150 are 18-8964 to 18-9002 inclusive.
(30) Serial numbers of the 1973 PA-18 Model 150 are 18-7309016 to 18-7309025 inclusive.
(31) Serial numbers of the 1974 PA-18 Model 150 are 18-7409026 to 18-7409151 inclusive.
(32) Serial numbers of the 1975 PA-18 Model 150 are 18-7509001 to 18-7509142 inclusive.
(33) Serial numbers of the 1976 PA-18 Model 150 are 18-7609001 to 18-7609157 inclusive.
(34) Serial numbers of the 1977 PA-18 Model 150 are 18-7709001 to 18-7709198 inclusive.
(35) Serial numbers of the 1978 PA-18 Model 150 are 18-7809001 to 18-7809188 inclusive.
(36) Serial numbers of the 1979 PA-18 Model 150 are 18-7909001 to 18-7909200 inclusive.
(37) Serial numbers of the 1980 PA-18 Model 150 are 18-8009001 to 18-8009061 inclusive.
(38) Serial numbers of the 1981 PA-18 Model 150 are 18-8109001 to 18-8109086 inclusive.
(39) Serial numbers of the 1982 PA-18 Model 150 are 18-8209001 to 18-8209025 inclusive.
(40) Serial numbers of the 1983 PA-18 Model 150 are 18-8309001 to 18-8309025 inclusive.

b. The fuel tank installed in the right wing panel is Optional Equipment on PA-18 Models 95,105 and 125 and on the PA-18A Model 125 and Standard Equipment on the PA-18 and PA-18A Models 135 and 150. The parts required for this installation are listed in their individual sections and, wherever the part is the same as used for the fuel tank installation in the left wing panel and in the same location, the following note appears directly under the Nomenclature of the part: (xx per ship when fuel tank installed in right wing). Whenever the part is used only when the fuel tank is installed in the right wing panel, (A) precedes the name (Nomenclature) of the part.

c. SPECIAL NOTE: PA-18 aircraft serial numbers 18-2520,18-2521,18-2522,18-2523 and 18-2524 were equipped with special flap handle installation, toe brakes and special seats in accordance with Drawing Number SK-449. When ordering replacement parts for these airplanes, it is suggested this drawing be secured from Piper for positive parts identification.

STANDARD PAINT CHART

	1950	1951	1952	1953	1954	1955	1956	1957	1958 and up	MFG. NO.	PIPER PART NUMBER QUART	GALLON
DOPE - NITRATE												
Lock Haven Yellow	X									M-9521-N	750 121	750 122
Tucson Cream	X									X-5260-N	751 207	751 181
Miami Blue	X									X-5700-N	751 211	751 182
Sacramento Green	X									X-5270-N	751 212	751 183
Boston Maroon	X									X-5680-N	751 208	751 184
Hickory Brown	X									Y-9775-N	751 210	751 198
DOPE - BUTYRATE												
Lock Haven Yellow		X			X	X	X	X		M-9521-B	751 587	751 588
Tucson Cream		X	X	X	X					X-5260-B	751 589	751 590
Miami Blue		X	X	X	X	X	X	X		X-5700-B	751 603	751 604
Sacramento Green		X	X	X	X	X	X	X		X-5270-B	751 597	751 598
Boston Maroon		X	X	X	X	X	X	X		X-5680-B	751 605	751 606
Hickory Brown		X	X	X	X	X	X	X		Y-9775-B	751 651	751 652
Tennessee Red		X								M-9522-B	751 599	751 600
Polar Gray		X	X	X						Y-6100-B	751 595	751 596
Tennessee Red "52"			X	X	X	X	X	X		M-9522-B	751 641	751 642
Forest Green			X	X	X	X	X	X		Y-6350-B	751 607	751 608
Lemon Yellow			X							M-9512-B	751 635	751 636
Cream Yellow			X							Y-7551-B	751 643	751 644
Sportsman Beige				X						X-5710-B	751 591	751 592
Tampico Green					X	X	X	X		XZ-2160-B	751 649	751 650
Sun Valley Ivory						X	X	X		Z-7245-B	751 647	751 648
Daytona White							X	X	X	J-9545-B	751 660	751 661
Cadillac Red							X	X		J-9555-B	751 664	751 665
Santa Fe Red									X	H-9150-B	754 500	754 501
Pontiac Red									X	W-3665-B	754 512	754 513
Juneau White									X	B-4243-B	754 532	754 533
DOPE - Clear, Nitrate											750 165	750 166
DOPE - Clear, Butyrate											751 593	751 594
DOPE - Aluminum, Nitrate											750 193	750 194
DOPE - Aluminum, Butyrate											751 633	751 634
PRIMER - Zinc Chromate											750 161	750 162
THINNER - Nitrate											751 177	751 178
THINNER - Zinc Chromate												750 186
THINNER - Butyrate											751 631	751 632
THINNER - Enamel											751 629	751 630

STANDARD PAINT CHART

	1950	1951	1952	1953	1954	1955	1956	1957	1958 and up	MFG. NO.	PIPER PART NUMBER QUART	GALLON
ENAMEL												
Lock Haven Yellow		X	X		X	X	X	X		M-9521-E	751 617	751 618
Tennessee Red		X								M-9522-E	751 621	751 622
Tucson Cream		X	X	X	X					X-5260-E	751 609	751 610
Miami Blue		X	X	X	X	X	X	X		X-5700-E	751 611	751 612
Sacramento Green		X	X	X	X	X	X	X		X-5270-E	751 619	751 620
Boston Maroon		X	X	X	X	X	X	X		X-5680-E	751 625	751 626
Hickory Brown		X	X	X	X	X	X	X		Y-9775-E	751 687	751 688
Forest Green		X	X	X	X	X	X	X		Y-6350-E	751 627	751 628
Polar Gray		X	X	X						Y-6100-E	751 615	751 616
Tennessee Red "52"			X	X	X	X	X	X		M-9522-E	751 694	751 695
Lemon Yellow			X							M-9512-E	751 692	751 693
Cream Yellow			X							Y-7551-E	751 677	751 678
Sportsman Beige				X						X-5710-E	751 613	751 614
Tampico Green					X	X	X	X		XZ-2160-E	751 683	751 684
Sun Valley Ivory						X	X	X		Z-7245-E	751 681	751 682
Rapid City Black						X	X	X	X	J-3940-E	751 696	751 697
Daytona White							X	X	X	J-9545-E	751 700	751 701
Cadillac Red							X	X		J-9555-E	751 704	751 705
Santa Fe Red									X	H-9150-E	751 712	751 713
Pontiac Red									X	W-3665-E	754 716	754 717
Juneau White									X	B-4243-E	754 755	754 756

TABLE OF CONTENTS

FIGURE NUMBER	FIGURE TITLE	GRID NUMBER
1	Exploded View of Complete Airplane	1A11
	SECTION I WING GROUP	
2	Wing and Fuel Tank Installation	1A12
3	Covered Wing Assembly	1A18
4	Wing Panel Assembly, Uncovered (Showing Leading Edge)	1A20
5	Wing Panel Assembly, Uncovered (Showing Trailing Edge) PA-18 "95" - S/N 18-1 and up, PA-18 "105", "125" and "135" - S/N 18-1 to 18-3770 inclusive, 18-3772 to 18-3780 inclusive	1B1
6	Wing Panel Assembly, Uncovered (Showing Leading Edge) PA-18 "135" and "150" - S/N 18-3771, 18-3781 and up	1B6
6A	Flap Assembly (PA-18-150 S/N 18-7809001 and up)	1B9
6B	Aileron Assembly (PA-18-150 S/N 18-7809001 and up)	1B11
7	Strut Installation	1B13
	SECTION II FUSELAGE GROUP	
8	Covered Fuselage Assembly, Left View	1B15
9	Covered Fuselage Assembly, Right View	1B20
10	Fuselage Frame Assembly	1C1
11	Seats Installation	1C5
12	Rudder Pedals and Floorboards Installation	1C10
13	Throttle, Cabin and Carburetor Heat Mixture Controls	1C12
14	Instrument Panels Installation, Standard	1C15
15	Instrument Panels Installation, Advanced and Primary	1C19
16	Instrument Panels Installation, Gyro (S/N 18-1 to 18-8019 incl.)	1C22
16A	Instrument Panels Installation, Gyro (S/N 18-8020 and up)	1D1
	SECTION III AGRICULTURAL GROUP	
17	Fluid Spray Pump Installation (PA-18A Only)	1D6
18	Boom Installation (PA-18A Only)	1D9
19	Sprayer Equipment Installation (PA-18A Only)	1D12
20	Duster Equipment Installation (PA-18A Only)	1D18
21	Hopper Installation (PA-18A Only)	1D20
22	Cargo Compartment Installation (PA-18A Only)	1E1
22A	Emergency Dump Installation (PA-18A Only)	1E2
	SECTION IV TAIL GROUP	
23	Tail Surface Installation	1E5

TABLE OF CONTENTS

FIGURE NUMBER	FIGURE TITLE	GRID NUMBER
	SECTION V CHASSIS GROUP	
24	Landing Gear Installation	1E8
25	Wheel and Brake Drum Assembly (Hayes Industries)	1E14
25A	Brake Assembly (Cleveland)	1E15
25B	Main Wheel Assembly (Cleveland)	1E17
26	Wheel Fender Installation	1E19
27	Tail Wheel Installation (6" Maule and Scott)	1E20
27A	Tail Wheel Installation (8" Maule)	1F1
28	Brake Installation	1F2
	SECTION VI POWER PLANT GROUP	
29	Power Plant Installation (Lycoming)	1F5
30	Power Plant Installation (Continental)	1F11
31	Spinner Installation	1F14
32	Cowl Installation (Lycoming)	1F17
33	Cowl Installation (Continental)	1F21
34	Baffles Installation (Lycoming and Continental)	1G1
34A	Special Carburetor Air Box Installation	1G5
34B	Vacuum Pump Installation (Wet)	1G7
34C	Vacuum Pump Installation (Dry)	1G9
	SECTION VII FUEL SYSTEM GROUP	
35	Fuel System Installation	1G12
	SECTION VIII ELECTRICAL SYSTEM GROUP	
36	Electrical System Installation	1G17
37	Electrical Components Installation	1G22
38	Battery Box Installation	1H1
39	Wing Light and Strobe Light Installation	1H3
40	Landing Light Installation	1H5
40A	Electric Fuel Gauge Installation ("150")	1H7
40B	35 AMP Generator Installation ("150")	1H9
40C	Speaker and Dome Light Installation ("150")	1H11

TABLE OF CONTENTS

FIGURE NUMBER	FIGURE TITLE	GRID NUMBER
	SECTION IX CONTROL SYSTEM GROUP	
41	Elevator and Aileron Control Installation	1H13
42	Elevator Control System	1H16
43	Aileron Control System	1H18
44	Rudder Control System	1H19
45	Flap Control System	1H20
46	Adjustment Stabilizer Control System	1H22
47	Stabilizer Adjustment Crank Installation	1I1
48	Stabilizer Adjustment Yoke	1I3
	SECTION X RADIO GROUP	
49	Radio Installation, G.E.	1I6
50	Radio Installation, Bendix PARTR-10A	1I8
51	Radio Installation, Bendix PAT-50A	1I10
52	Radio Installation, Lear LTRA-5	1I12
53	Radio Installation, Narco	1I15
53A	Radio Installation, Genave	1I18
54	Radio Installation, PTR-1	1I21
54A	Piper Automatic Locator (ELT) Installation (Garrett Mfg. Ltd)	1I23
54B	Piper Automatic Locator (ELT) Installation (Communications Components Corp.)	1J1
54C	Piper Automatic Locator (ELT) Installation (Narco Avionics)	1J3
	SECTION XI MISCELLANEOUS GROUP	
	Optional Equipment Kits	1J5
	NUMERICAL INDEX	1J9

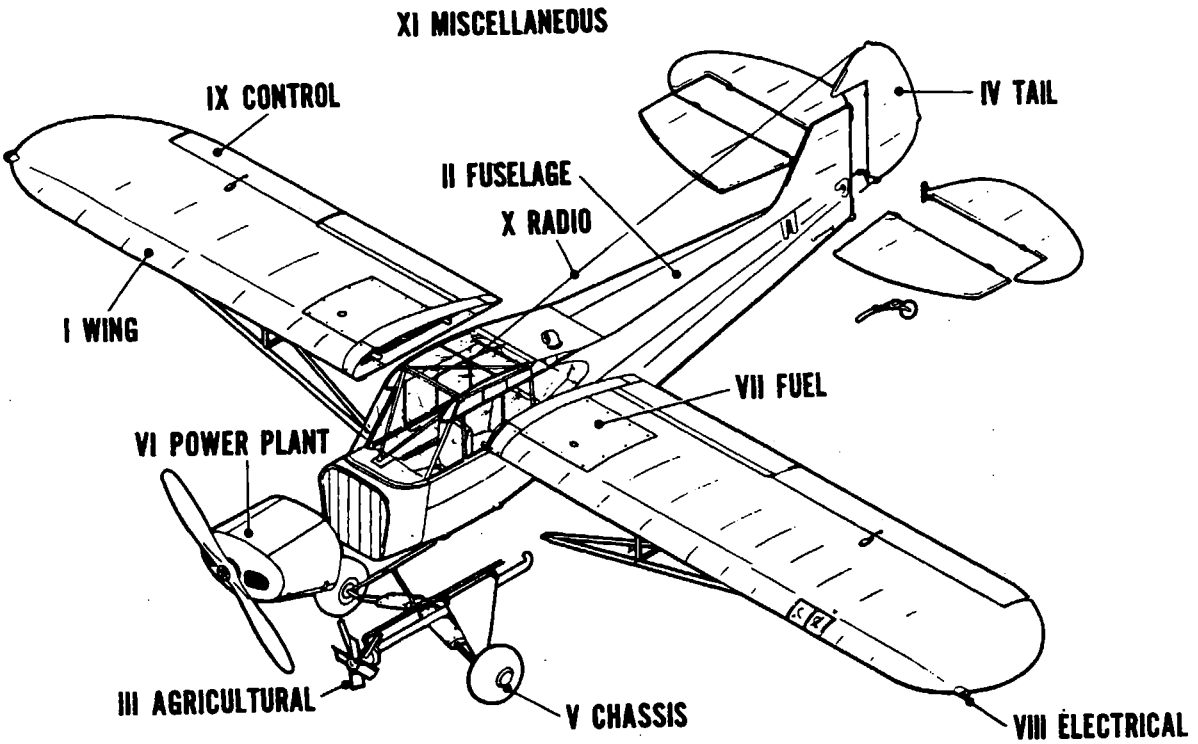

Figure 1. Exploded View of Complete Airplane

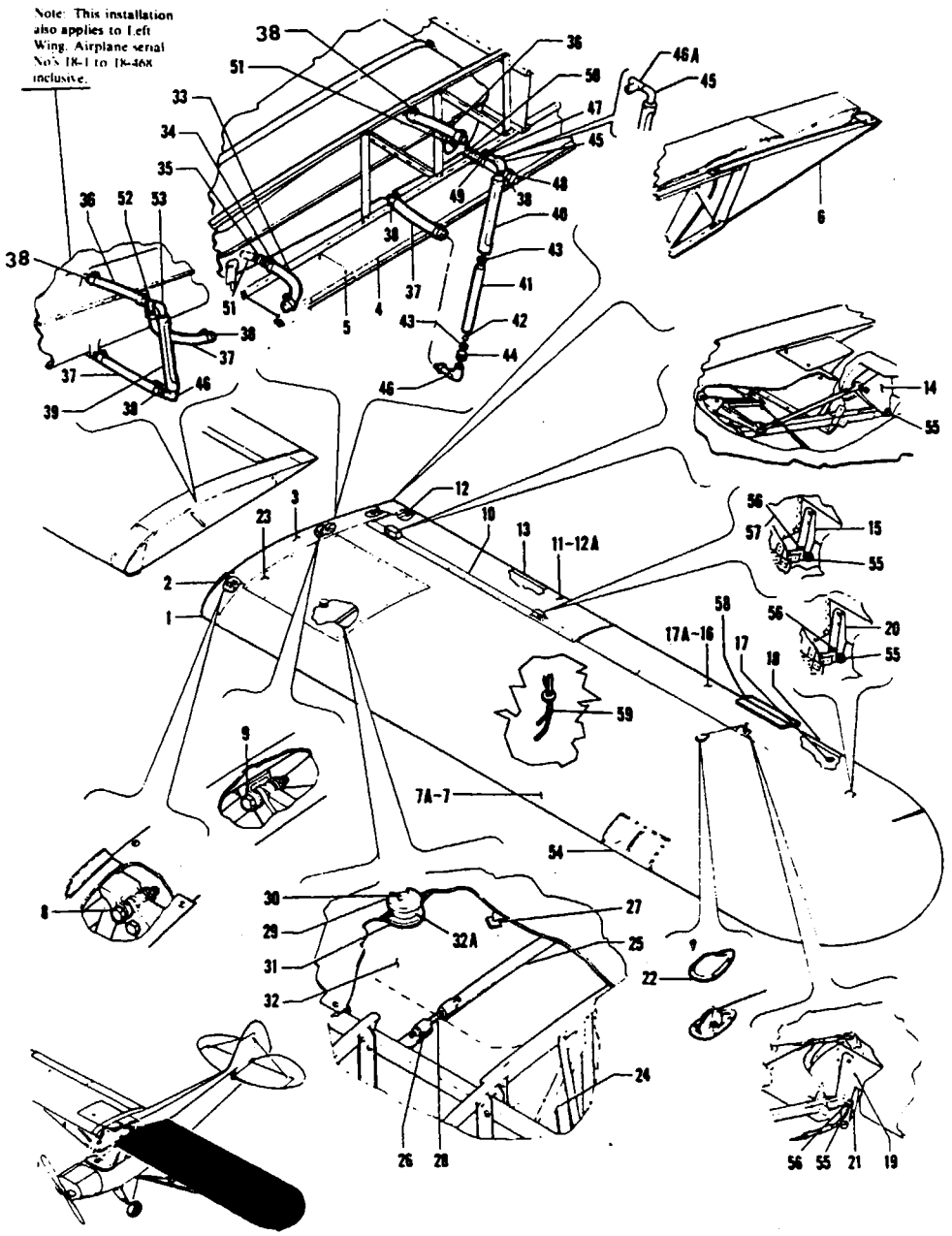

Figure 2. Wing and Fuel Tank Installation

PIPER PARTS CATALOG

Figure and Index Number	Part Number	Code	NOMENCLATURE	No. Req.	SERIAL NUMBERS AFFECTED
2-	12322		DRAWING - Rigging Diagram		
	12554		DRAWING - Aircraft Dimension and Control Surface Travel		(PA-18 only) 18-1 to 18-3770, 18-3772 to 18-3780 inclusive
	13253		DRAWING - Aircraft Dimension and Control Surface Travel		(PA-18A only) 18-1215 to 18-3770, 18-3772 to 18-3785 inclusive
	12544		DRAWING - Wing and Fuel Tank Installation “95”, “105” and “125”		
	13766		DRAWING - Wing and Fuel Tank Installation “135” and “150”		
	14477		DRAWING - Aircraft Dimension and Control Surface Travel “135” and “150” and up		(PA-18 only) 18-3771, 18-3781
	14482		DRAWING - Aircraft Dimension and Control Surface Travel “135” and “150” and up		(PA-18A only) 18-3771, 18-3786
	14487		DRAWING - Aircraft Dimension and Control Surface Travel “95”		18-3771, 18-3781 and up
	85401	A	DRAWING - Fuel Cap Cover Assembly/Installation		
-1	12276-00		FAIRING - Wing root, LH	1	
	12276-01		FAIRING - Wing root, RH	1	
-2	19657-00		MOULDING - Rubber	2’	
-3	11523-00		FAIRING - Wing root, top	2	
-4	12274-00		FAIRING - Wing root, bottom front, LH	1	
	12274-02		FAIRING - Wing root, bottom front, RH	1	
-5	12275-00		FAIRING - Wing root, bottom rear, LH	1	
	12275-01		FAIRING - Wing root, bottom rear, RH	1	
-6	11719-00		PLATE - Fairing attachment, “105’ “125”, “135” and “ 150”, LH	1	
	11719-01		PLATE - Fairing attachment, “105”, “125”, “135” and “150”, RH	1	
-7	10624-02		PANEL ASSEMBLY - Wing, fabric covered, “95”, LH	1	18-1 to 18-468 inclusive
	10624-06		PANEL ASSEMBLY - Wing, fabric covered, “95”, LH	1	18-469 and up
	12779-00		PANEL ASSEMBLY - Wing, fabric covered, “105”, LH	1	18-1 to 18-468 inclusive
	12779-04		PANEL ASSEMBLY - Wing, fabric covered, “105” and “125”, LH	1	18-469 and up
	12779-08		PANEL ASSEMBLY - Wing, fabric covered, “135”, LH	1	18-1810 to 18-3770 inclusive, 18-3772 to 18-3780 inclusive
	14400-00		PANEL ASSEMBLY - Wing, fabric covered, “135” and “150”, LH	1	18-3771, 18-3781 to 18-8919
	14400-04		PANEL ASSEMBLY - Wing, ceconite covered, “150”, LH	1	18-8920 and up

A - Used on PA18A “150” and PA18 “150” only.

When ordering, always specify Part Number, Description, and Serial Number of Aircraft

PIPER PARTS CATALOG

Figure and Index Number	Part Number	Code	NOMENCLATURE	No. Req.	SERIAL NUMBERS AFFECTED
2-7	10624-05	A	PANEL ASSEMBLY - Wing, fabric covered, "95", RH	1	
	10624-03		PANEL ASSEMBLY - Wing, fabric covered, "95", RH	1	
	12779-01		PANEL ASSEMBLY - Wing, frabric covered, "105" and "125", RH	1	
	12779-03	A	PANEL ASSEMBLY - Wing, fabric covered, "105", "125" "135", RH	1	18-1 to 18-3770 inclusive, 18-3772 to 18-3780 inclusive
	14400-01		PANEL ASSEMBLY - Wing, fabric covered, "135" and "150", RH	1	18-3771, 18-3781 to 18-8919
	14400-05		PANEL ASSEMBLY - Wing, ceconite covered, "150", RH	1	18-8920 and up
-7a	459 119		ENVELOPE - Wing, ceconite, left	1	18-8920 and up
	459 120		ENVELOPE - Wing, ceconite, right	1	18-8920 and up
-8	401 195		BOLT - (AN5-17A)	2	
	407 566		WASHER - (AN960-516)	2	
	404 889		NUT - (MS20365-524C)	2	
-9	401 194		BOLT - (AN5-16A)	2	
	407 566		WASHER - (AN960-516)	4	
	404 889		NUT - (MS20365-524C)	2	
-10	12795-00		FAIRING - Flap, "105", "125", "135", and "150", LH	1	
	12795-01		FAIRING - Flap, "105", "125", "135", and "150", RH	1	
-11	12773-00		FLAP ASSEMBLY - Fabric covered, "105", "125", "135", and "150", LH	1	18-1 to 18-8919 inclusive
	12773-02		FLAP ASSEMBLY - Ceconite covered, "150", LH	1	18-8920 to 18-7709198 inclusive
	60709-02	B	FLAP ASSEMBLY - Aluminum, "150", Left	1	18-7809001 and up
	12773-01		FLAP ASSEMBLY - Fabric covered, "105", "125", "135" and "150", RH	1	18-1 to 18-8919 inclusive
	12773-03		FLAP ASSEMBLY - Ceconite covered, "150", RH	1	18-8920 to 18-7709198 incl.
	60709-03	B	FLAP ASSEMBLY - Aluminum, "150" Right	1	18-7809001 and up
-12	80122-53		GROMMET - Drain, "105", "125", "135" and "150"	7	18-1 to 18-7709198 incl.
-12a	459 125		ENVELOPE - Flap assembly, ceconite	1	18-8920 to 18-7709198 incl.
-13	12768-00		FLAP ASSEMBLY - Uncovered, "105", "125", "135" and "150", LH	1	18-1 to 18-7709198 incl.
	12768-01		FLAP ASSEMBLY - Uncovered, "105", "125", "135" and "150", RH	1	18-1 to 18-7709198 incl.
-14	11682-00		HINGE - Flap, inboard, "105", "125", "135" and "150"	1	18-1 to 18-7709198 incl.
-15	41881-02		HINGE - Flap, outboard, "105", "125", "135" and "150"	1	18-1 to 18-7709198 incl.
-16	42592-00		AILERON ASSEMBLY - Fabric covered, LH	1	18-1 to 18-8919 inclusive
	42592-04		AILERON ASSEMBLY - Ceconite covered, LH	1	18-8920 to 18-7709198 incl.
	60714-02	C	AILERON ASSEMBLY - Aluminum, left	1	18-7809001 and up
	42592-01		AILERON ASSEMBLY - Fabric covered, RH	1	18-1 to 18-8919 inclusive
	42592-05		AILERON ASSEMBLY - Ceconite covered, RH	1	18-8920 to 18-7709198 incl.
	60714-03	C	AILERON ASSEMBLY - Aluminum, Right	1	18-7809001 and up
-17	80122-53		GROMMET - Drain	9	18-1 to 18-7709198 incl.
-17a	459 111		ENVELOPE - Aileron assembly, ceconite	1	18-8920 to 18-7709198 incl.
-18	42585-00		AILERON ASSEMBLY - Uncovered, LH	1	18-1 to 18-7709198 incl.
	42585-01		AILERON ASSEMBLY - Uncovered, RH	1	18-1 to 18-7709198 incl.
-19	41891-00		HINGE - Center	1	18-1 to 18-7709198 incl.
-20	41881-00		HINGE - Inboard and outboard	2	18-1 to 18-7709198 incl.
-21	40501-00		HORN ASSEMBLY	1	18-1 to 18-7709198 incl.

A - Used when fuel tank is installed in right wing.
B - See Figure 6A for component parts.
C - See Figure 6B for component parts.

When ordering, always specify Part Number, Description and Serial Number of Aircraft

PIPER PARTS CATALOG

Figure and Index Number	Part Number	Code	NOMENCLATURE	No. Req.	SERIAL NUMBERS AFFECTED
2-22	60752-00		COVER - Pulley	2	
-23	12570-09		COVER ASSEMBLY - Fuel tank, LH	1	18-469 and up
	12570-09	A	COVER ASSEMBLY - Fuel tank, RH	1	
	10657-05		COVER ASSEMBLY - Fuel tank, LH	1	18-1 to 18-468 inclusive
-24	11034-00		COVER ASSEMBLY - Tank brace (4 per ship when fuel tank is installed in right wing)	2	
-25	10016-20		FELT - Top (4 per ship when fuel tank is installed in right wing)	2	
	10016-21		FELT - Bottom (4 per ship when fuel tank is installed in right wing)	2	
-26	10016-17		FELT - Front (4 per ship when fuel tank is installed in right wing)	2	
-27	180 497		FELT - SAE F-50, tank cover (10 ft. per ship when fuel tank is installed in right wing)	5’	
-28	80111-00		STUD - Tank strap (4 per ship when fuel tank is installed in right wing)	2	
-29	60750-02	E,F	CAP - Tank (2 per ship when fuel tank is installed in right wing)	1	
	60750-07	C,D	CAP - Tank (2 per ship when fuel tank is installed in right wing)	1	
	85327-02	C,D	COVER ASSEMBLY - Fuel cap	1	
-30	751 829	B	GASKET - Cap (2 per ship when fuel tank is installed in right wing)	1	
-31	80122-48		WASHER - Fuel seal (2 per ship when fuel tank is installed in right wing)	1	
-32	10849-00		TANK ASSEMBLY - Fuel, LH	1	18-1 to 18-468 inclusive
	10849-32		TANK ASSEMBLY - Fuel, LH	1	18-469 and up
	10849-25	A	TANK ASSEMBLY - Fuel, RH	1	
-32a	74181-00		* FLANGE - Fuel tank filler cap	1	
-33	82371-10		HOSE - (2 per ship when fuel tank is installed in right wing)	1	
-34	554 871		CLAMP - GS6SS Type “F” (4 per ship when fuel tank is installed in right wing)	2	
-35	476 652		NIPPLE - (AN840-6D) (2 per ship when fuel tank is installed in right wing)	1	
-36	82371-31		HOSE - Flexible, upper	1	18-469 and up
-37	82371-06		HOSE - Flexible, lower, LH	1	18-469 and up
	82371-06		HOSE - Flexible, LH	3	18-1 to 18-468 inclusive
	82371-06	A	HOSE - Flexible	3	
-38	554 778		CLAMP - GS4SS Type “F” (12 per ship when fuel tank is installed in right wing)	6	
-39	14884-00		GAUGE ASSEMBLY - Fuel, left	1	
	14885-00		GAUGE ASSEMBLY - Fuel, right	1	
-40	10837-00		* GAUGE	1	
-41	10852-00		* TUBE - Glass	1	
-42	10853-00		* FLOAT	1	
-43	19513-24		* WASHER	2	
-44	10847-00		* BUSHING	1	

A - Used when fuel tank is installed in right wing.
B - Used on Fuel Cap Stamped 610 only
C - Used on PA18A “150” and PA18 “150”.
D - See latest revision of Piper Service Bulletin 979 for serial numbers 1809001 to 1809109.
E - See latest revision of Piper Service Bulletin 148A for serial numbers 18-5189 to 18-5412 inclusive. Used on PA-18 and PA-18A’s.
F - See latest revision of Piper Service Bulletin 445 for serial numbers 18-7309016 to 18-7509031 inclusive.

When ordering, always specify Part Number, Description, and Serial Number of Aircraft

PIPER PARTS CATALOG

Figure and Index Number	Part Number	Code	NOMENCLATURE	No. Req.	SERIAL NUMBERS AFFECTED
2-45	458 903		* ELBOW - (AN842-4) left, top	1	
	458 904		* ELBOW - (AN914-1D) right, top	1	
-46	10834-00		* ELBOW - Bottom	1	
-46a	488 544		* FITTING - Tee, right (1K27-1)	1	
-47	434 138		GROMMET - (AN931-10-14) Left	1	18-469 and up
-48	82371-07		HOSE - Flexible	1	18-469 and up
-49	11987-25		TUBE - Strainer to hose, LH	1	18-469 and up
-50	460 649		FITTING - Connector (W/H No. 234 x 4)	1	18-469 and up
-51	72091-00		STRAINER ASSEMBLY - Tank outlet (3 per ship when fuel tank is installed in right wing) (1 per ship left wing - airplane serial numbers 18-1 to 18-468 inclusive)	2	
-52	488 371	A	TEE - (3141-3-4D) (when fuel tank is installed in right wing)	1	
	488 371		TEE - (3141-3-4D) LH	1	18-1 to 18-468 inclusive
-53	458 904	A	ELBOW - (AN914-1D) (used when fuel tank is installed in right wing)	1	
	458 904		ELBOW - (AN914-1D) Left wing	1	18-1 to 18-468 inclusive
-54	12532-00	B	WINDOW - Landing light, "95", "105", "125" and "135"	1	
	12532-03		WINDOW - Landing light, "135" and "150"	1	18-3771, 18-3781 and up
-55	424 217		PIN - Hinge, aileron and flap (AN394-41)	10	
-56	407 565		WASHER - (AN960-416)	AR	
	407 585		WASHER - (AN960-416L)	AR	
-57	407 565		WASHER - (AN960-416)	AR	
	407 585		WASHER - (AN960-416L)	AR	
	750 454		KIT - Rib repair	1	
	750 286		* CAPSTRIP MATERIAL	12'	
	750 287		* DIAGONAL RIB BRACING - .020	12'	
	00031-24		* RIB CAPSTRIP REPAIR STRIP	5	
	12692-05		* FRONT SPAR ANGLE BRACE - Rear	4	
	12692-06		* REAR SPAR ANGLE BRACE - Front	3	
	12692-07		* REAR SPAR ANGLE BRACE - Rear	3	
	16621-00		* NOSE RIB REPAIR SECTION	3	
	421 022		* 3/32" x 1/4", No. 2SO aluminum rivets	¼ lb.	
-58	11253-00		TAB - Aileron trim	1	18-1 to 18-7709198 inclusive
-59	13764-00		TUBE ASSEMBLY - Airspeed (pitot and static) "135" and "150"	1	

A - Used when fuel tank is installed in right wing.
B - Used on airplanes with serial numbers 18-1 to 18-3770 inclusive, 18-3772 to 18-3780 inclusive.

When ordering, always specify Part Number, Description and Serial Number of Aircraft

1A17

INTENTIONALLY LEFT BLANK

Figure and Index Number	Part Number	Code	NOMENCLATURE	No. Req.	SERIAL NUMBERS AFFECTED
3-	12779		DRAWING - Wing Assembly, Covered, "105", "125" and "135"		18-1 to 18-3770 inclusive, 18-3772 to 18-3780 inclusive
	10624		DRAWING - Wing Assembly, Covered, "95"		
	14400		DRAWING - Wing Panel Assembly, Covered, "135" and "150"		18-3771, 18-3781 and up
-1	82461-00		COVER - Rectangular	AR	
-2	12761-02		COVER - Round	AR	
-3	81232-15		DISC - Pyralin, jig hole cover	8	
-4	85012-78		GROMMET - Round	AR	
-5	80122-51		GROMMET - Reinforcing, pyralin	AR	
-6	80541-02		GROMMET - Cover	AR	
-7	80122-53		GROMMET - Drain	AR	
-8	60671-00		GROMMET - Aileron pulley cover	2	
-9	15761-00		REINFORCEMENT - Pyralin	4	
-10	60863-03		REINFORCEMENT - Leather	7	
-11	60863-09		REINFORCEMENT - Leather	2	
-12	11473-47		PLATE - Reinforcing	6	

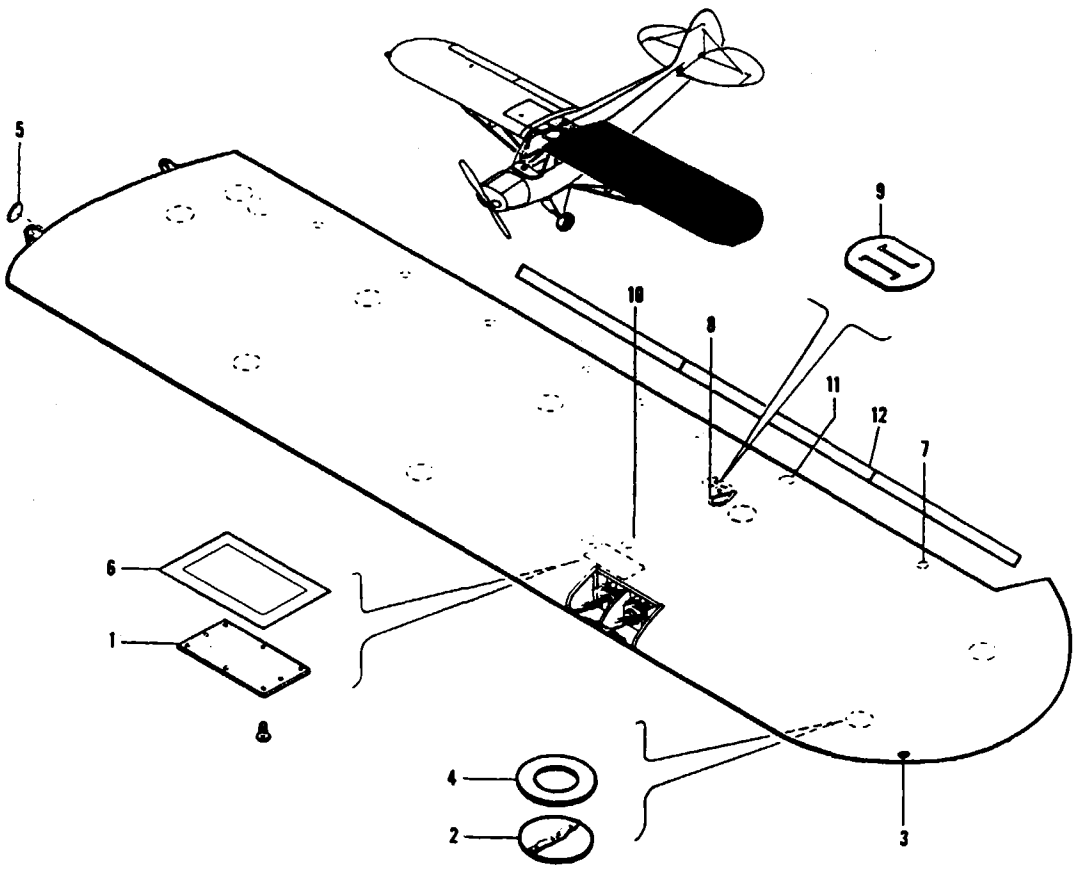

Figure 3. Covered Wing Assembly

1A19

INTENTIONALLY LEFT BLANK

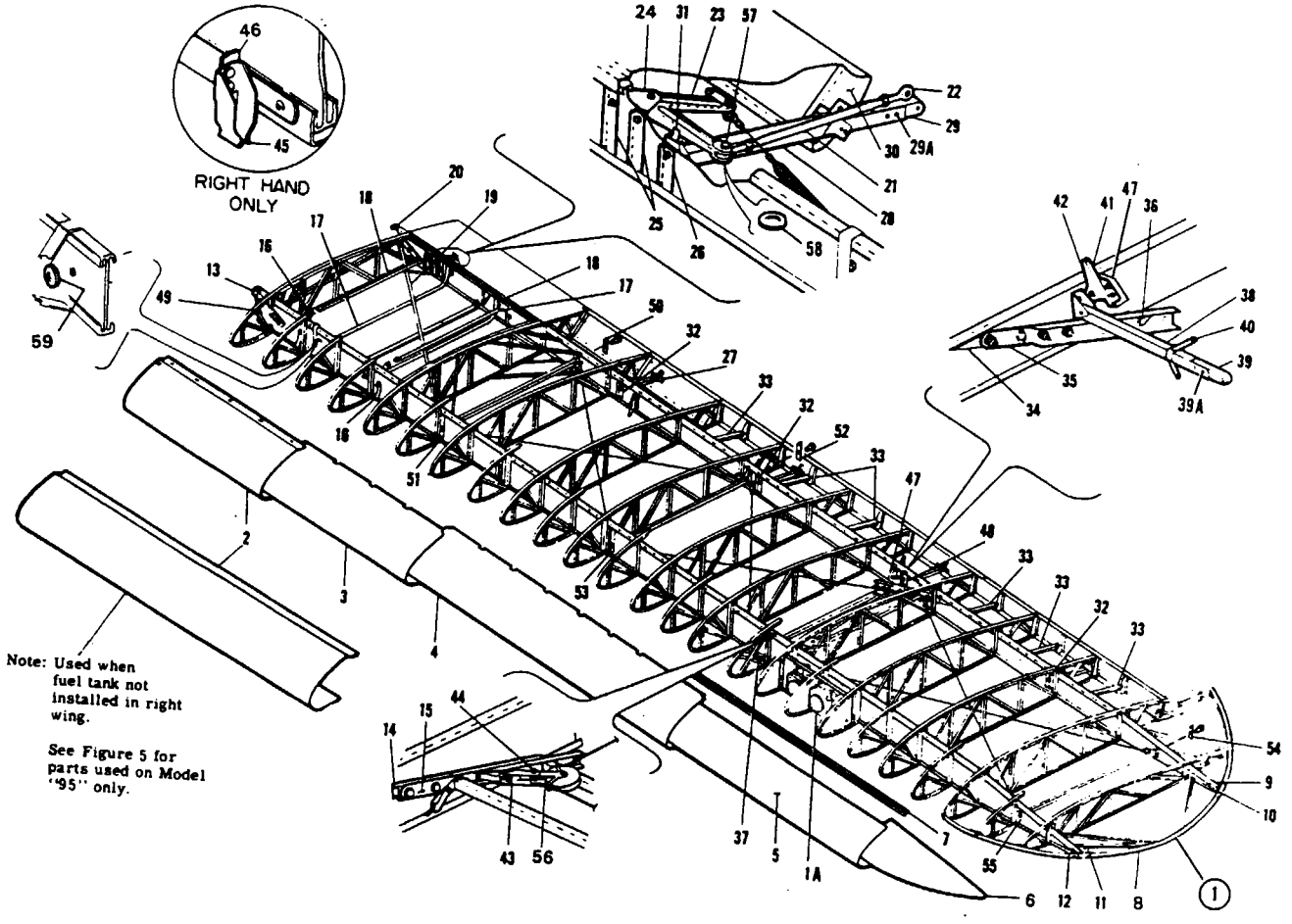

Figure 4. Wing Panel Assembly, Uncovered (Showing Leading Edge)

PIPER PARTS CATALOG

Figure and Index Number	Part Number	Code	NOMENCLATURE	No. Req.	SERIAL NUMBERS AFFECTED
4-	12778		DRAWING - Wing panel assembly, uncovered, "105", "125" and "135"		18-1 to 18-3770 incl. and 18-3772 to 18-3780 inclusive
	14394		DRAWING - Wing panel assembly, uncovered, "135" and "150"		18-3771, 18-3781 and up
	10625		DRAWING - Wing panel assembly, uncovered, "95"		18-1 and up
-1	10625-04		WING PANEL ASSEMBLY - Uncovered, "95", LH	1	18-1 to 18-468 inclusive
	10625-06		WING PANEL ASSEMBLY - Uncovered, "95", LH	1	18-469 and up
	10625-03		WING PANEL ASSEMBLY - Uncovered, "95", RH	1	
	10625-05	A	WING PANEL ASSEMBLY - Uncovered, "95", RH	1	
	12778-01		WING PANEL ASSEMBLY - Uncovered, "105" and "125", RH	1	
	12778-03	A	WING PANEL ASSEMBLY - Uncovered, "105", "125" and "135", RH	1	18-1 to 18-3770 inclusive and 18-3772 to 18-3780 inclusive
	12778-00		WING PANEL ASSEMBLY - Uncovered, "105", LH	1	18-1 to 18-468 inclusive
	12778-04		WING PANEL ASSEMBLY - Uncovered, "105" and "125", LH	1	18-469 and up
	12778-08		WING PANEL ASSEMBLY - Uncovered, "135", LH	1	18-1810 to 18-3770 inclusive and 18-3772 to 18-3780 inclusive
	14394-00		WING PANEL ASSEMBLY - Uncovered, "135" and "150", LH	1	18-3771, 18-3781 and up
	14394-01		WING PANEL ASSEMBLY - Uncovered, "135" and and "150", RH	1	18-3771, 18-3781 and up
-1a	472 661		LIGHT - Landing (4509)	2	
-2	10630-00		COVER ASSEMBLY - Leading edge, LH	1	18-1 to 18-468 inclusive
	10630-11	B	COVER ASSEMBLY - Leading edge, LH, "95", "105" "125" and "135"	1	
	10630-09	AC	COVER ASSEMBLY - Leading edge, RH, "95", "105", "125" and "135"	1	
	15472-01		COVER - Leading edge, RH (When fuel tank not installed), "95", "105", "125"	1	
	10630-05		COVER - Leading edge inboard, RH#1, "135" and "150"	2	18-3771, 18-3781 and up
	10630-08		COVER - Leading edge inboard, LH#1, "135" and "150"	2	18-3771, 18-3781 and up
-3	10631-00	C	COVER ASSEMBLY - Leading edge, LH, "95", "105" "125" and "135"	1	
	10631-01	AC	COVER - Leading edge, RH, "95", "105", "125" and "135"	1	
	14387-00		COVER - Leading edge, center inboard section, LH#2, "135" and "150"	1	18-3771, 18-3781 and up
	14387-01		COVER - Leading edge, center inboard section, RH#2, "135" and "150"	1	18-3771, 18-3781 and up

A - Used when fuel tank is installed in right wing.
B - Used on PA-18 "95" airplanes with serial numbers 18-469 and up. Used on PA-18 and PA-18A "105", "125" and "135" airplanes with serial numbers 18-469 to 18-3770, 18-3772 to 18-3780 inclusive.
C - Used on PA-18 "95" airplanes with serial numbers 18-1 and up. Used on PA-18 and PA-18A "105", "125" and "135" airplanes with serial numbers 18-1 to 18-3770, 18-3772 to 18-3780 inclusive.

When ordering, always specify Part Number, Description and Serial Number of Aircraft

PIPER PARTS CATALOG

Figure and Index Number	Part Number	Code	NOMENCLATURE	No. Req.	SERIAL NUMBERS AFFECTED
4-4	15482-00	A	COVER - Leading edge, LH, “95”, “105”, “125” and “135”	1	
	15482-01	A	COVER - Leading edge, RH, “95”, “105”, “125” and “135”	1	
	14389-00		COVER - Leading edge, center outboard section, LH#3, “135” and “150”	1	18-3771,18-3781 and up
	14389-01		COVER - Leading edge, center outboard section, RH#3, “135” and “150”	1	18-3771,18-3781 and up
-5	13072-05	A	COVER ASSEMBLY - Leading edge, “95”, “105”, “125” and “135”	2	
	13072-06		COVER - Leading edge outboard No. 4, “135” and “150”	2	18-3771,18-3781 and up
-6	15723-00		COVER - Tip, leading edge, LH	1	
	15723-01		COVER - Tip, leading edge, RH	1	
-7	15742-00	A	REINFORCEMENT - Leading edge, “95”, “105”, “125” and “135”	2	
-8	453 126		BOW - Wing tip	2	
-9	16611-00		FITTING - Wing tip, bow, rear spar	2	
-10	16601-00		FITTING - Wing tip, bow, rear spar	2	
-11	16551-00		FITTING - Wing tip, bow, front spar	2	
-12	16561-00		FITTING - Wing tip, bow, front spar	2	
-13	10401-00		FITTING - Front spar butt hinge	4	
-14	14461-00		BLOCK - Filler	4	
-15	14192-00		FITTING ASSEMBLY - Left strut attachment	4	
-16	10648-03		STRAP ASSEMBLY - Fuel tank	2	
	10648-03	B	STRAP ASSEMBLY - Fuel tank	4	
-17	10650-02		STRAP ASSEMBLY - Fuel tank	2	
	10650-02	B	STRAP ASSEMBLY - Fuel tank	4	
-18	10649-03		STRAP ASSEMBLY - Fuel tank	2	
	10649-03	B	STRAP ASSEMBLY - Fuel tank	4	
-19	10641-00		TUBE - Drag brace, fuel tank	1	
	10641-00	B	TUBE - Drag brace, fuel tank	2	
	10641-02		TUBE - Drag brace, fuel tank	1	18-3771, 18-3781 and up
-20	14161-00		FITTING - Hinge, rear spar butt	4	
-21	11677-00		ROD - Push pull, flap, “105”, “125”, “135” and “150”	2	
-22	452 335		BEARING - Push pull rod, “105”, “125”, “135” and “150”	2	
-23	40092-10		BELLCRANK - Flap control, “105”, “125”, “135” and “150”	2	
-24	11672-00		BRACKET - Flap bellcrank, “105”, “125”, “135” and “150”	2	
-25	11675-02		ANGLE - Reinforcement, “105”, “125”, “135” and “150”	4	
-26	11675-03		ANGLE - Reinforcement, “105”, “125”, “135” and “ 150”	2	
-27	10703-04		BRACKET ASSEMBLY - Flap hinge, “105”, “125”, “135” and “150”	2	
-28	10703-03		BRACKET ASSEMBLY - Flap hinge, “105”, “125”, “135” and “150”	2	

A - Used on PA-18 “95” airplanes with serial numbers 18-1 and up. Used on PA-18 and PA-18A “105”, “125” and “135” airplanes with serial numbers 18-1 to 18-3770,18-3772 to 18-3780 inclusive.
B - Used when fuel tank is installed in right wing.

When ordering, always specify Part Number, Description, and Serial Number of Aircraft

PIPER PARTS CATALOG

Figure and Index Number	Part Number	Code	NOMENCLATURE	No. Req.	SERIAL NUMBERS AFFECTED
4-29	10921-00	A,D	* BLOCK- Bearing	1	
	10921-02	B	* BLOCK- Bearing	1	
-29a	422 604		* RIVET - Steel (1/8" x 15/16" L)	2	
-30	12028-00		CHANNEL - Reinforcement, "105", "125" and "135"	2	18-1 to 18-3770 inclusive, 18-3772 to 18-3780 inclusive
-31	11678-00		PLATE - Stop, " 105", "125", "135" and " 150"	2	
-32	10291-00		ANGLE - Reinforcement, "95", inboard and outboard aileron hinge	4	
	10291-00		ANGLE - Reinforcement, "105", "125", "135" and "150", inboard aileron hinge, outboard aileron hinge, and outboard flap hinge	6	
-33	14541-00		BRACE ASSEMBLY - False spar	12	
-34	14271-00		BLOCK- Filler	4	
-35	14182-00		FITTING - Lift strut attachment	4	
	481 096		COVER PLATE - Inspection cover	1	18-3781 to 1809100
-36	15631-03		SPACER	2	
-37	15631-02		SPACER	2	
-38	10703-00		BRACKET ASSEMBLY - Aileron hinge	6	
-39	10921-00	A,D	* BLOCK	1	
	10921-02	B	* BLOCK	1	
-39a	422 604		* RIVET - Steel (1 /8" x 15/16" L)	2	
-40	14581-00		STOP ASSEMBLY - Aileron	2	
-41	14611-00		BRACKET - Aileron pulley, inboard half, LH	1	
	14611-01		BRACKET - Aileron pulley, inboard half, RH	1	
-42	14621-00		BRACKET - Aileron pulley, outboard half, LH	1	
	14621-01		BRACKET - Aileron pulley, outboard half, RH	1	
-43	14261-00		BRACKET - Aileron pulley housing attachment	2	
-44	82732-24		BUSHING	2	
-45	52745-00	C	CATCH - Door	1	
	10280-00		CATCH - Door	1	18-1 to 18-231 inclusive
-46	12847-00	C	BRACKET ASSEMBLY - Door catch mounting	1	
	10474-00		CHANNEL - Door catch attachment	1	18-1 to 18-231 inclusive
-47	14571-00		ANGLE - Reinforcement, pulley bracket, LH	1	
	14571-01		ANGLE - Reinforcement, pulley bracket, RH	1	
-48	14291-00		ANGLE - Reinforcement, center aileron hinge, LH	1	
	14291-01		ANGLE - Reinforcement, center aileron hinge, RH	1	
-49	14401-08		ANGLE - Reinforcement, No. 1 drag strut	2	
-50	14411-02		ANGLE - Reinforcement, No. 2 drag strut	2	
-51	14401-03		ANGLE - Reinforcement, No. 2 drag strut	2	
-52	14411-03		ANGLE - Reinforcement, No. 3 drag strut	2	
-53	14401-04		ANGLE - Reinforcement, No. 3 drag strut	2	
-54	14411-04		ANGLE - Reinforcement, No. 5 drag strut	2	
-55	14401-05		ANGLE - Reinforcement, No. 5 drag strut	2	
-56	41291-00		HOUSING - Pulley	2	
-57	12713-04		SCREW - "105", "125" and "135"	2	18-1 to 18-3770 inclusive, 18-3772 to 18-3780 inclusive
	400 443		BOLT - Flap bellcrank to push pull rod (AN3-12A) "135" and "1502	2	18-3771, 18-3781 and up

A - Used on airplanes with serial numbers 18-1 to 18-721 inclusive, 18-873 to 18-1026 inclusive, 18-1125, 18-1130 and up.
B - Used on airplanes with serial numbers 18-722 to 18-872 inclusive, 18-1027 to 18-1124 inclusive, and 18-1126 to 18-1129 inclusive.
C - Used on airplanes with serial numbers 18-232 and up, and all airplanes which had fuel tank installed in right wing.
D - See latest revision of Piper Service Letter 216A.

When ordering, always specify Part Number, Description, and Serial Number of Aircraft

Figure and Index Number	Part Number	Code	NOMENCLATURE	No. Req.	SERIAL NUMBERS AFFECTED
4-58	407 564		WASHER - Spacer, flap control rod installation at bellcrank (AN960-10) "105", "125", "135", and "150"	4	
-59	80122-11		WASHER - Fuel tank strap attachment	16	18-4618 and up

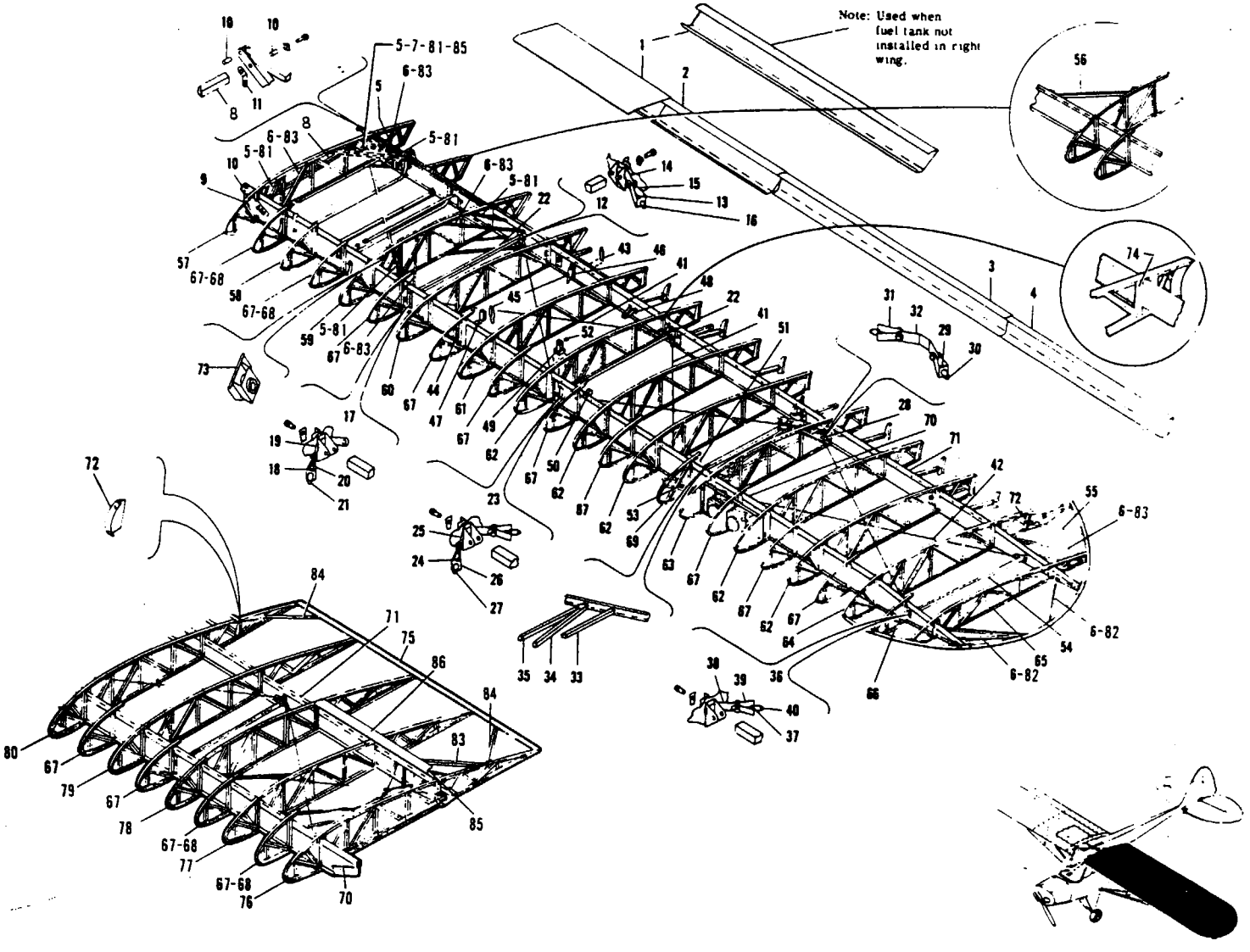

Figure 5. Wing Panel Assembly, Uncovered
(Showing Trailing Edge)
PA-18 "95" - Serial Nos. 18-1 and up
PA-18 "105", "125" and "135" - Serial Nos. 18-1 to 18-3770 incl.
18-3772 to 18-3780 inclusive

PIPER PARTS CATALOG

Figure and Index Number	Part Number	Code	NOMENCLATURE	No. Req.	SERIAL NUMBERS AFFECTED
5-	10625		DRAWING - Wing Panel Assembly, Uncovered, "95"		
	12788		DRAWING - Wing Panel Assembly, Uncovered, "105", "125" and "135"		
-1	12784-00		SPAR - False, flap, "105", left	1	18-1 to 18-468 inclusive
	12784-05		SPAR - False, flap, "105", "125", and "135", left	1	18-469 to 18-3770 inclusive 18-3772 to 18-3781 inclusive
	12783-00		SPAR - False, flap, "105" and "125", right (62.625" L.)	1	
	12784-03	B	SPAR - False, flap, "105", "125" and "135", right	1	
-2	11670-02		SPAR - False, flap, "105", "125" and "135", left	1	
	11670-03	B	SPAR - False, flap, "105", "125" and "135", right	1	
-3	15562-00		SPAR - False, aileron, "95", "105", "125" and "135", left	1	
	15562-01		SPAR - False, aileron, "95", "105", "125" and "135", right	1	
-4	15572-00		SPAR - False, aileron, "95", "105", "125" and "135", left	1	
	15572-01		SPAR - False, aileron, "95", "105", "125" and "135", right	1	
-5	12252-02		BRACE - Channel, "105", "125" and "135", (8.50" L.)	9	
	12252-02	B	BRACE - Channel, "105", "125" and "135", (8.50" L.)	8	
-6	12252-03		BRACE - Channel, "105", "125" and "135", (16.0" L.)	19	
	12252-03	B	BRACE - Channel, "105", "125" and "135", (16.0" L.)	16	
-7	12252-06		BRACE - Channel, "105", "125" and "135", (6.25" L.)	1	
	12252-06	B	BRACE - Channel, "105", "125" and "135", (6.25" L.)	2	
-8	14232-02		STRUT - Drag, No. 1	2	
-9	80122-25		WASHER	1	
	80122-25	B	WASHER	2	
-10	80022-31		BUSHING - Insert	6	
-11	10171-04		FITTING - Attachment, brace tube	1	
	10171-04	B	FITTING - Attachment, brace tube	2	
-12	10705-00		FITTING ASSEMBLY - Drag wire pull, front and rear spar No. 1 drag strut, right, rear spar No. 2 drag strut, left	3	
	10705-00	B	FITTING ASSEMBLY - Drag wire pull, rear spar, No. 2 drag strut, left and right	2	
-13	81102-03		* WASHER - Square	1	
-14	10171-04		* FITTING	1	
-15	10221-00		* CLEVIS	1	
-16	10201-00		* NIPPLE	1	
-17	10711-00		FITTING ASSEMBLY - Drag wire pull, front spar, No. 2 drag strut, left	1	
	10711-00	B	FITTING ASSEMBLY - Drag wire pull, front spar, No. 2 drag strut, left and right	2	

A - Used on PA-18 "95" airplanes with serial numbers 18-1 and up. Used on PA-18 and 18A "105", "125" and "135" airplanes with serial numbers 18-1 to 18-3770 inclusive, 18-3772 to 18-3780 inclusive.
B - Used when fuel tank is installed in right wing.

PIPER PARTS CATALOG

Figure and Index Number	Part Number	Code	NOMENCLATURE	No. Req.	SERIAL NUMBERS AFFECTED
5-18	81102-03		* WASHER - Square	1	
-19	10161-04		* FITTING	1	
-20	10221-00		* CLEVIS	1	
-21	10201-00		* NIPPLE	1	
-22	14222-02		STRUT ASSEMBLY - Drag, No. 2 and No. 3	4	
-23	10706-00		FITTING ASSEMBLY - Drag wire pull, front and rear spar No. 2 drag strut, right, front and rear spar No. 3 drag strut, left and right	6	
	10706-00	B	FITTING ASSEMBLY - Drag wire pull, front and rear spar No. 3 drag strut, left and right	4	
-24	81102-03		* WASHER - Square	2	
-25	10161-04		* FITTING	1	
-26	10221-00		* CLEVIS	2	
-27	10201-00		* NIPPLE	2	
-28	10707-00		FITTING ASSEMBLY - Drag wire pull, "N" brace, front and rear spar, No. 4 drag strut	4	
-29	81102-03		* WASHER - Square	2	
-30	10201-00		* NIPPLE	2	
-31	10221-00		* CLEVIS	2	
-32	10161-05		* FITTING - Wire pull	1	
-33	16462-00		TUBE ASSEMBLY - Drag strut, upper "N"	2	
-34	10112-07		TUBE - Drag strut, "N" brace	2	
-35	16472-00		TUBE ASSEMBLY - Drag strut, lower "N"	2	
-36	10709-00		FITTING ASSEMBLY - Drag wire pull, front and rear spar, No. 5 drag strut	4	
-37	81102-03		* WASHER - Square	1	
-38	10171-05		* FITTING - Wire pull	1	
-39	10221-00		* CLEVIS	1	
-40	10201-00		* NIPPLE	1	
-41	14941-06		WIRE - Drag, No. 2 and No. 3 bay, left and right, No. 1 bay, right, 44.875" L. (2 per bay)	10	
	14941-06	B	WIRE - Drag, No. 2 and No. 3 bay, left and right, 44.875" L. (2 per bay)	8	
-42	14941-07		WIRE - Drag, No. 4 bay, left and right, 56.25" L. (2 per bay)	4	
-43	14361-02		ANGLE - Rear spar	2	
-44	14361-03		ANGLE - Front spar	2	
-45	12581-00		FITTING - Front and rear spar, Jury strut	4	
-46	14371-02		BLOCK - Filler, rear spar	2	
-47	14371-03		BLOCK - Filler, front spar	2	
-48	11580-00		BRACKET - Airspeed, "135"	1	18-1810 and up

A - Used on PA-18 "95" airplanes with serial numbers 18-1 and up. Used on PA-18 and PA-18A "105", "125" and "135" airplanes with serial numbers 18-1 to 18-3770 inclusive, 18-3772 to 18-3780 inclusive.

B - Used when fuel tank is installed in right wing.

PIPER PARTS CATALOG

Figure and Index Number	Part Number	Code	NOMENCLATURE	No. Req.	SERIAL NUMBERS AFFECTED
5-49	10644-00		BRACKET ASSEMBLY - Pulley	2	
-50	11061-00		CLIP - Navigation light wire	22	
-51	10531-00		FORMER - Fabric, "N" brace assembly, "95", "105", "125" and "135", left	1	
	10531-01		FORMER - Fabric, "N" brace assembly, "95", "105", "125" and "135", right	1	
-52	80012-03		BUSHING - Insert, pulley	2	
-53	10151-00		PLATE - Lock	24	
-54	14222-00		STRUT ASSEMBLY - Drag, No. 5	2	
-55	12252-05		BRACE - Channel (11" L.)	2	
-56	12252-04	B	BRACE - Channel (17" L.), right	1	
-57	10634-05		RIB ASSEMBLY - No. 1 butt, "105", "125" and "135", left	1	
	10634-07	C	RIB ASSEMBLY - No. 1 butt, "105", "125" and "135", right	1	
	10908-04		RIB ASSEMBLY - No. 1 butt, "105" and "125", right	1	
-58	10635-02		RIB ASSEMBLY - No. 2, "105", "125" and "135", left	1	
	13052-07		RIB ASSEMBLY - No. 2, "105" and "125", right	1	
	10635-02	C	RIB ASSEMBLY - No. 2, "105", "125" and "135", right	1	
-59	10653-02		RIB ASSEMBLY - No. 3, "105", "125" and "135", left	1	
	10907-02		RIB ASSEMBLY - No. 3, "105" and "125", right	1	
	10653-05	C	RIB ASSEMBLY - No. 3, "105", "125" and "135", right	1	
-60	13052-07		RIB ASSEMBLY - No. 4, "105", "125" and "135", left and right	2	
-61	13042-02		RIB ASSEMBLY - No. 5, "105", "125" and "135", left	1	
	13042-03		RIB ASSEMBLY - No. 5, "105", "125" and "135", right	1	
-62	13022-02		RIB ASSEMBLY - Nos. 6, 7, 8, 10 and 11, "95", "105", "125" and "135", left and right	10	
-63	13022-09		RIB ASSEMBLY - No. 9, "95", "105", "125" and "135", left and right	2	
-64	12902-00		RIB ASSEMBLY - No. 12, "95", "105", "125" and "135", left	1	
	12902-01		RIB ASSEMBLY - No. 12, "95", "105", "125" and "135", right	1	
-65	10742-02		RIB ASSEMBLY - No. 13, tip, "95", "105", "125" and "135", left	1	
	10742-03		RIB ASSEMBLY - No. 13, tip, "95", "105", "125" and "135" right	1	
-66	16192-00		RIB - Nose, tip, left	1	
	16192-01		RIB - Nose, tip, right	1	
-67	15831-02		RIB ASSEMBLY - Nose, (8) left, (10) right	18	
	15831-02	C	RIB ASSEMBLY - Nose, left and right	16	
-68	12662-04		RIB ASSEMBLY - Nose, special, No. 1 and No. 2, left	2	
	12662-04	C	RIB ASSEMBLY - Nose, special, No. 1 and No. 2, left and right	4	
-69	15712-00		RIB ASSEMBLY - Nose, left and right	2	
-70	14383-04		SPAR ASSEMBLY - Front "95", "105", "125" and "135", left	1	
	14383-05		SPAR ASSEMBLY - Front, "95", "105", "125" and "135", right	1	

A - Used on PA-18 "95" airplanes with serial numbers 18-1 and up. Used on PA-18 and PA-18A "105", "125" and "135" airplanes with serial numbers 18-1 to 18-3770 inclusive, 18-3772 to 18-3780 inclusive.
B - Used only when fuel tank is not installed in right wing.
C - Used when fuel tank is installed in right wing.

Figure and Index Number	Part Number	Code	NOMENCLATURE	No. Req.	SERIAL NUMBERS AFFECTED
5-71	14453-02		SPAR - Rear, “95”, left	1	
	14453-03		SPAR - Rear, “95”, right	1	
	14453-04		SPAR - Rear, “105”, “125” and “135”, left	1	
	14453-05		SPAR - Rear, “105”, “125” and “135”, right	1	
-72	13171-00		GUSSET- False spar	4	
-73	11151-02		PLATE - “U” fairlead retainer	4	
-74	15211-00		BRACE - Wing rib	AR	
-75	15773-00		TRAILING EDGE - “95”	2	
-76	10634-04		RIB ASSEMBLY - No. 1, “95”, left	1	
	10908-03		RIB ASSEMBLY - No. 1, “95”, right	1	
	10634-08	B	RIB ASSEMBLY - No. 1, “95”, right	1	
-77	10635-00		RIB ASSEMBLY - No. 2, “95”, left	1	
	13052-02		RIB ASSEMBLY - No. 2, “95”, right	1	
	10635-00	B	RIB ASSEMBLY - No. 2, “95”, right	1	
-78	10653-00		RIB ASSEMBLY - No. 3, “95”, left	1	
	10907-00		RIB ASSEMBLY - No. 3, “95”, right	1	
	10653-06	B	RIB ASSEMBLY - No. 3, “95”, right	1	
-79	13052-02		RIB ASSEMBLY - No. 4, “95”, left and right	2	
-80	13042-00		RIB ASSEMBLY - No. 5, “95”, left	1	
	13042-01		RIB ASSEMBLY - No. 5, “95”, right	1	
-81	12252-02		BRACE - Channel, “95”, (8.50” L.)	9	
	12252-02	B	BRACE - Channel, “95”, (8.50” L.)	6	
-82	12252-03	C	BRACE - Channel, “95”, (16.0” L.)	8	
	12252-04	C	BRACE - Channel, “95”, (17.02’ L)	8	
-83	12252-03		BRACE - Channel, “95”, (16.0” L.)	13	
	12252-03	B	BRACE - Channel, “95”, (16.0” L.)	10	
-84	12252-08		BRACE - Channel, “95”, (13,75’^ L)	4	
-85	12252-06		BRACE - Channel, “95”, (6.25” L.)	5	
	12252-06	B	BRACE - Channel, “95”, (6.25” L.)	6	
-86	10633-00		LATE ASSEMBLY - Tank cover support, left	1	18-1 to 18-468 inclusive
	10633-05		LATE ASSEMBLY - Tank cover support, left	1	18-469 and up
	10633-05	B	LATE ASSEMBLY - Tank cover support, right	1	

A - Deleted
B - Used when fuel tank is installed in right wing.
C - Ascertain part length and order accordingly.

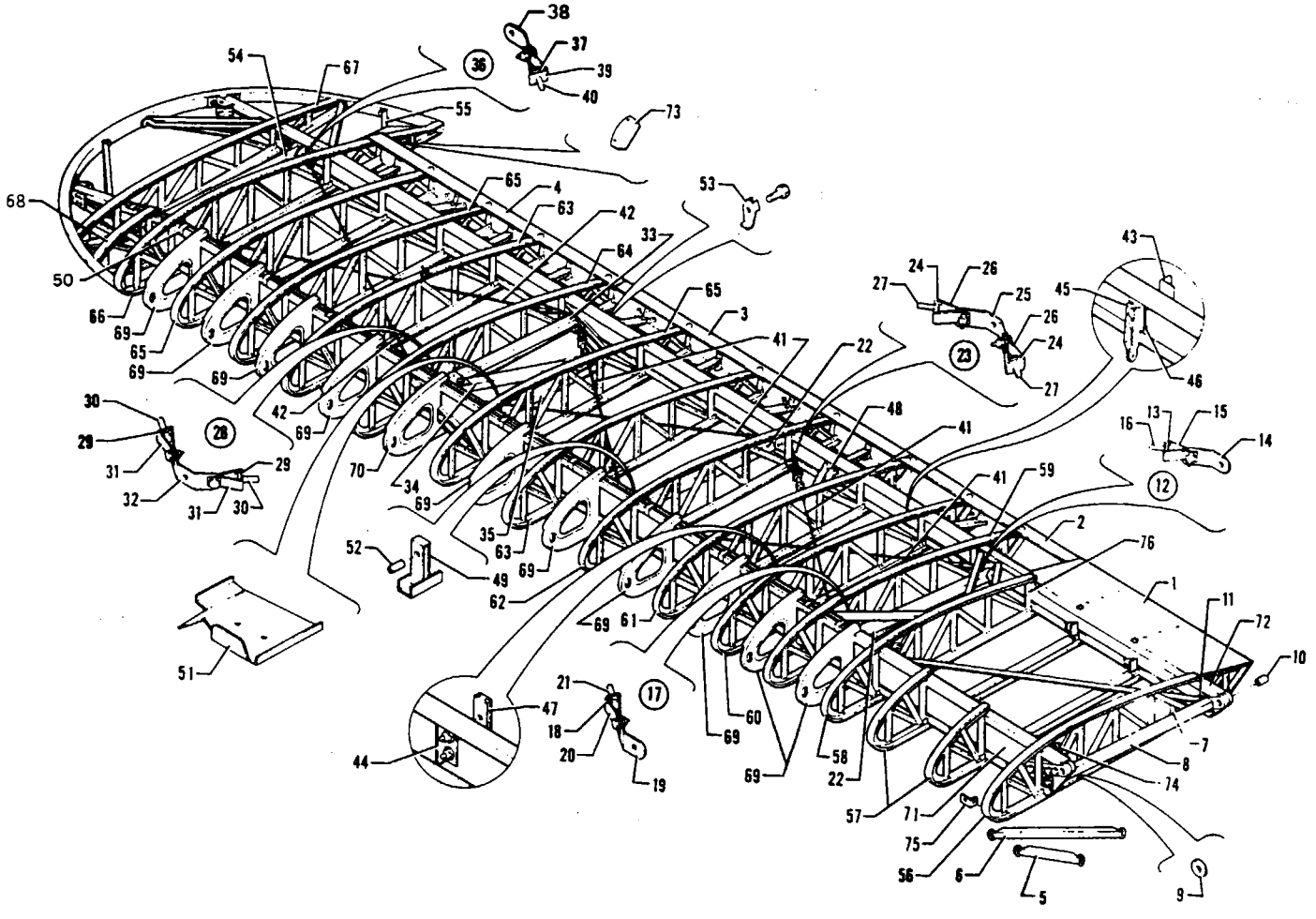

Figure 6. Wing Panel Assembly, Uncovered
(Showing Trailing Edge)
(PA-18 "135" and "150" - Serial Nos. 18-3771, 18-3781 and up)

PIPER PARTS CATALOG

Figure and Index Number	Part Number	Code	NOMENCLATURE	No. Req.	SERIAL NUMBER AFFECTED
6-	14394		DRAWING - Wing Panel Assembly, Uncovered "135" and "150"		
-1	14385-00		SPAR - False, flap inboard, "135" and "150", left	1	
	14385-01		SPAR - False, flap inboard, "135" and "150", right	1	
-2	11670-04		SPAR - False, flap outboard, "135" and "150", left	1	
	11670-05		SPAR - False, flap outboard, "135" and "150", right	1	
-3	14382-00		SPAR - False, aileron inboard, "135" and "150", left	1	
	14382-01		SPAR - False, aileron inboard, "135" and "150", right	1	
-4	15572-02		SPAR - False, aileron outboard, "135" and "150", left	1	
	15572-03		SPAR - False, aileron outobard "135" and "150", right	1	
-5	12252-02		BRACE - Channel (8.5" L.)	8	
-6	12252-03		BRACE - Channel (16.0" L.)	16	
-7	12252-06		BRACE - Channel (6.25" L.)	2	
-8	14232-02		STRUT - Drag, No. 1	2	
-9	80122-25		WASHER	2	
-10	80022-31		BUSHING - Insert	6	
-11	10171-04		FITTING - Attachment, brace tube,	2	
-12	10705-00		FITTING ASSEMBLY - Drag wire pull, rear spar, No. 2 drag strut	2	
-13	81102-03		* WASHER - Square	1	
-14	10171-04		* FITTING	1	
-15	10221-00		* CLEVIS	1	
-16	10201-00		* NIPPLE	1	
-17	10711-00		FITTING ASSEMBLY - Drag wire pull, front spar, No. 2 drag strut	2	
-18	81102-03		* WASHER - Square	1	
-19	10161-04		* FITTING	1	
-20	10221-00		* CLEVIS	1	
-21	10201-00		* NIPPLE	1	
-22	14222-02		STRUT ASSEMBLY - Drag, No. 2 and No. 3	4	
-23	10706-00		FITTING ASSEMBLY - Drag wire pull, front and rear spar, No. 3 drag strut	4	
-24	81102-03		* WASHER - Square	2	
-25	10161-04		* FITTING	1	
-26	10221-00		* CLEVIS	2	
-27	10201-00		* NIPPLE	2	
-28	10707-00		FITTING ASSEMBLY - Drag wire pull, "N" brace, front and rear spar, No. 4 drag strut	4	
-29	81102-03		* WASHER - Square	2	
-30	10201-00		* NIPPLE	2	
-31	10221-00		* CLEVIS	2	
-32	10161-05		* FITTING	1	
-33	16462-00		TUBE ASSEMBLY - Drag strut, upper "N"	2	
-34	10112-07		TUBE - Drag strut, "N" brace	2	
-35	16472-00		TUBE ASSEMBLY - Drag strut, lower "N"	2	
-36	10709-00		FITTING ASSEMBLY - Drag wire pull, front and rear spar, No. 5 drag strut	4	
-37	81102-03		* WASHER - Square	1	
-38	10171-05		* FITTING - Wire pull	1	
-39	10221-00		* CLEVIS	1	
-40	10201-00		* NIPPLE	1	
-41	14941-06		WIRE - Drag, No. 2 and No. 3 bay (44.875" L.)	8	
-42	14941-07		WIRE - Drag, No. 4 bay (56.25" L.)	4	
-43	14361-02		ANGLE - Rear spar	2	
			A - Used on PA-18 "135" and "150" airplanes with serial numbers 18-3771, 18-3781 and up.		

PIPER PARTS CATALOG

Figure and Index Number	Part Number	Code	NOMENCLATURE	No. Req.	SERIAL NUMBERS AFFECTED
6-44	14361-03		ANGLE - Front spar	2	
-45	12581-00		FITTING - Front and rear spar, Jury strut	4	
-46	14371-02		BLOCK - Filler, rear spar	2	
-47	14371-03		BLOCK - Filler, front spar	2	
-48	11580-00		BRACKET - Airspeed, "135" and "150", left	1	
-49	10644-00		BRACKET ASSEMBLY - Pulley	2	
-50	11061-00		CLIP - Navigation light wire	22	
-51	10531-04		FORMER - Fabric, "N" brace assembly, left	1	
	10531-05		FORMER - Fabric, "N" brace assembly, right	1	
-52	80012-03		BUSHING - Insert, pulley	2	
-53	10151-00		PLATE - Lock	24	
-54	14222-00		STRUT - Drag, No. 5	2	
-55	12252-05		BRACE - Channel (11" L.)	2	
-56	10634-05		RIB ASSEMBLY - No. 1 butt, left	1	
	10634-07		RIB ASSEMBLY - No. 1 butt, right	1	
-57	10635-02		RIB ASSEMBLY - Nos. 2 and 3, left and right	4	
-58	10653-02		RIB ASSEMBLY - No. 4, left	1	
	10653-05		RIB ASSEMBLY - No. 4, right	1	
-59	13052-07		RIB ASSEMBLY - No. 5, left and right	2	
-60	13052-10		RIB ASSEMBLY - No. 6, left	1	
	13052-09		RIB ASSEMBLY - No. 6, right	1	
-61	13042-02		RIB ASSEMBLY - No. 7, left	1	
	13042-03		RIB ASSEMBLY - No. 7, right	1	
-62	13022-10		RIB ASSEMBLY - No. 8, left and right	2	
-63	13022-11		RIB ASSEMBLY - Nos. 9 and 12, left and right	4	
-64	13022-09		RIB ASSEMBLY - No. 11, left and right	2	
-65	13022-02		RIB ASSEMBLY - Nos. 10, 13 and 14, left and right	6	
-66	12902-00		RIB ASSEMBLY - No. 15, left	1	
	12902-01		RIB ASSEMBLY - No. 15, right	1	
-67	10742-02		RIB ASSEMBLY - No. 16, tip, left	1	
	10742-03		RIB ASSEMBLY - No. 16, tip, right	1	
-68	16192-00		RIB - Nose, tip, left	1	
	16192-01		RIB - Nose, tip, right	1	
-69	15831-02		RIB ASSEMBLY - Nose, left and right	20	
-70	15831-05		RIB ASSEMBLY - Nose, No. 6, left and right	2	
-71	14391-02		SPAR ASSEMBLY - Front, left	1	
	14391-03		SPAR ASSEMBLY - Front, right	1	
-72	14392-02		SPAR ASSEMBLY - Rear, left	1	
	14392-03		SPAR ASSEMBLY - Rear, right	1	
-73	13171-00		GUSSET - False, spar	2	
-74	11151-02		PLATE - "U", fairlead retainer	4	
-75	12331-02		PLATE - Butt rib and leading edge attachment	2	
-76	16141-00		BRACE - Wing rib	AR	
			A - Used on PA-18 "135" and "150" airplanes with serial numbers 18-3771, 18-3781 and up.		

When ordering, always specify Part Number, Description and Serial Number of Aircraft

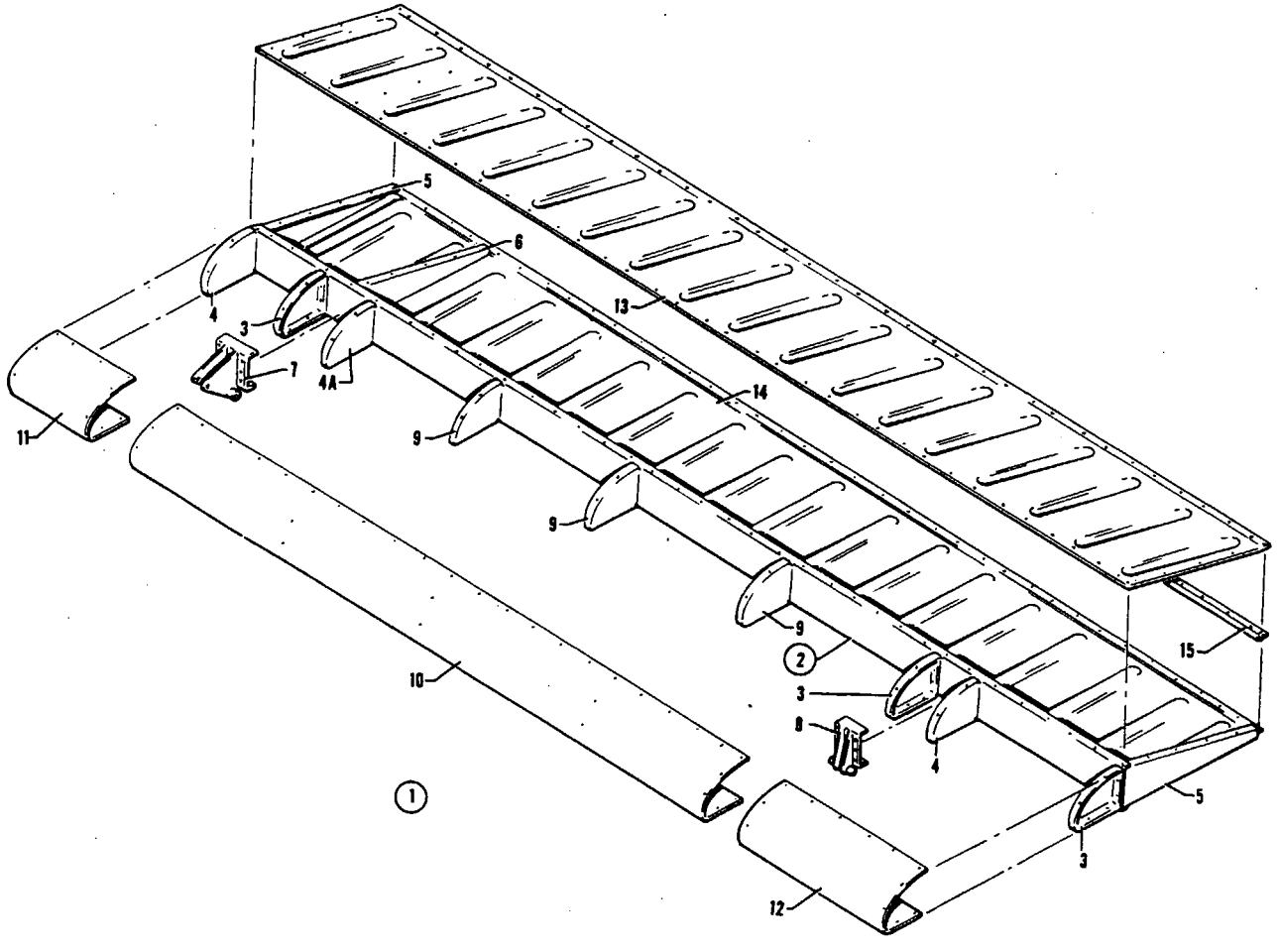

Figure 6A. Flap Assembly
(PA-18-150 Serial Nos. 18-7809001 and up)

PIPER PARTS CATALOG

Figure and Index Number	Part Number	Code	NOMENCLATURE	No. Req.	SERIAL NUMBERS AFFECTED
6A-1	60709-02		FLAP ASSEMBLY - Left	1	18-7809001 and up
	60709-03		FLAP ASSEMBLY - Right	1	18-7809001 and up
-2	60709-14		SPAR ASSEMBLY - Flap, left (complete)	1	
	60709-15		SPAR ASSEMBLY - Flap, right (complete)	1	
-3	40451-02		BULKHEAD - Flap, left	3	
	40451-03		BULKHEAD - Flap, right	3	
-4	40451-03		BULKHEAD - Flap, left	2	
	40451-02		BULKHEAD - Flap, right	2	
-4a	40451-07		BULKHEAD - Flap, left	1	
	40451-06		BULKHEAD - Flap, right	1	
-5	60708-02		RIB - Flap	2	
-6	60708-06		RIB - Flap	1	
-7	11682-00		HINGE ASSEMBLY - Flap, inboard	1	
-8	41881-02		HINGE ASSEMBLY - Flap, outboard	1	
-9	40451-03		BULKHEAD - Flap, left	3	
	40451-02		BULKHEAD - Flap, right	3	
-10	60709-06		SKIN - Flap, leading edge	1	
-11	60401-04		SKIN - Flap, leading edge inboard, left	1	
	60401-05		SKIN - Flap, leading edge inboard, right	1	
-12	60709-08		SKIN - Flap, leading edge, outboard, left	1	
	60709-09		SKIN - Flap, leading edge, outboard, right	1	
-13	60709-10		SKIN - Flap, trailing edge, top, left	1	
	60709-11		SKIN - Flap, trailing edge, top, right	1	
-14	60709-12		SKIN - Flap, trailing edge, bottom, left	1	
	60709-13		SKIN - Flap, trailing edge, bottom, right	1	
-15	60709-18		REINFORCEMENT - Trailing edge	1	

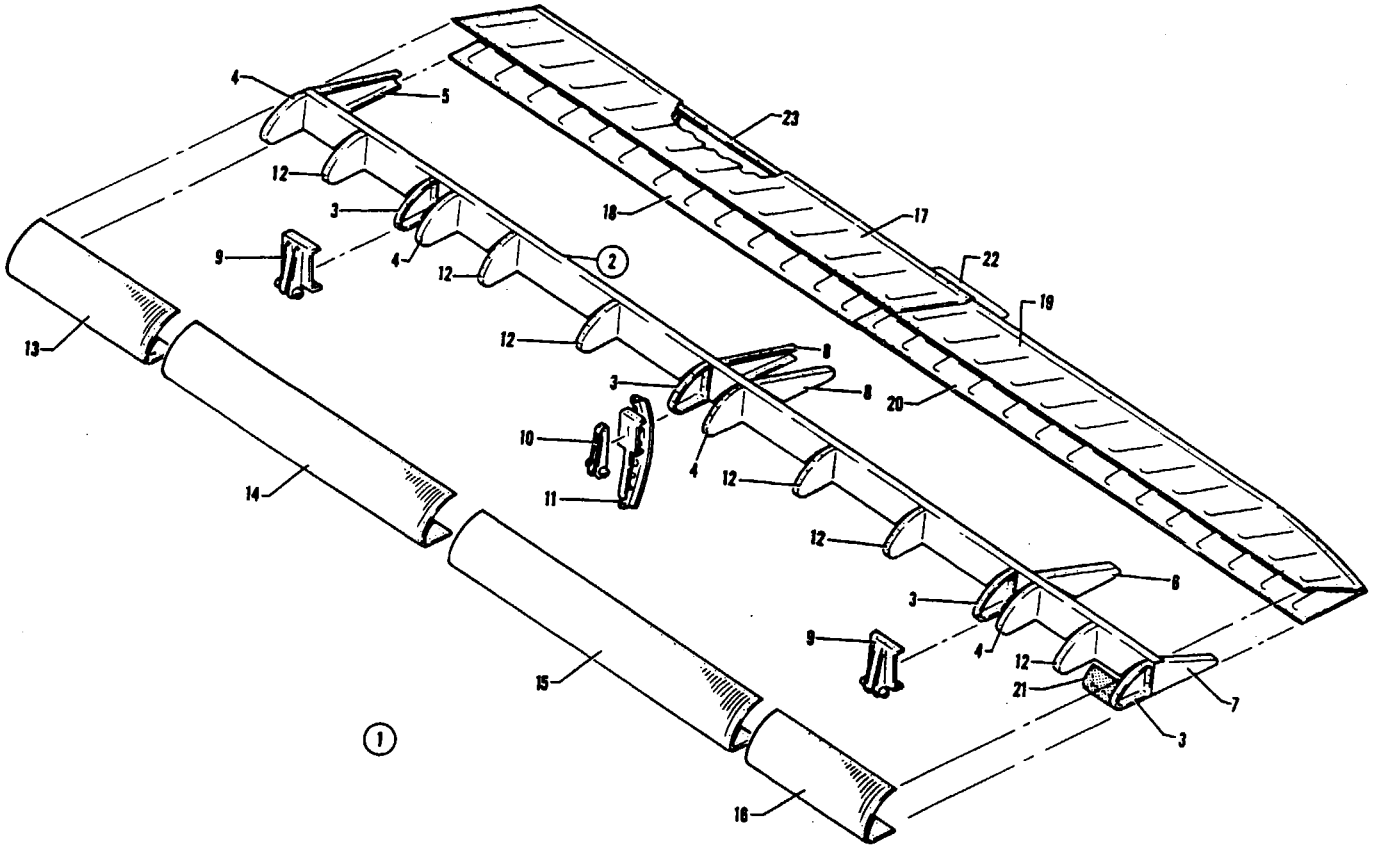

Figure 6B. Aileron Assembly
(PA-18-150 Serial Nos. 18-7809001 and up)

PIPER PARTS CATALOG

Figure and Index Number	Part Number	Code	NOMENCLATURE	No. Req.	SERIAL NUMBERS AFFECTED
6B-1	60714-02		AILERON ASSEMBLY - Left	1	18-7809001 and up
	60714-03		AILERON ASSEMBLY - Right	1	18-7809001 and up
-2	60714-16		SPAR ASSEMBLY - Left (complete)	1	
	60714-17		SPAR ASSEMBLY - Right (complete)	1	
	42972-02		SPAR - Left aileron	1	
	42972-03		SPAR - Right aileron	1	
-3	40451-02		BULKHEAD - Flap, left	1	
	40451-03		BULKHEAD - Flap, right	4	
-4	40451-03		BULKHEAD - Flap, left	4	
	40451-02		BULKHEAD - Flap, right	4	
-5	60708-02		RIB - Aileron	1	
-6	60708-03		RIB - Aileron	1	
-7	60708-04		RIB - Aileron	1	
-8	60708-05		RIB - Aileron	2	
-9	41881-00		HINGE ASSEMBLY - Aileron	2	
-10	41891-00		HINGE ASSEMBLY - Aileron, center	1	
-11	40501-00		HORN ASSEMBLY - Aileron	1	
-12	40451-03		BULKHEAD - Aileron, left	6	
	40451-02		BULKHEAD - Aileron, right	6	
-13	60714-04		SKIN - Aileron, inboard, left	1	
	60714-05		SKIN - Aileron, inboard, right	1	
-14	60714-06		SKIN - Aileron, center, inboard, left	1	
	60714-07		SKIN - Aileron, center, inboard, right	1	
-15	60714-08		SKIN - Aileron, center, outboard, left	1	
	60714-09		SKIN - Aileron, center, outboard, right	1	
-16	60714-10		SKIN - Aileron, outboard, left	1	
	60714-11		SKIN - Aileron, outboard, right	1	
-17	60714-12		SKIN - Aileron, trailing edge, inboard, top, left	1	
	60714-13		SKIN - Aileron, trailing edge, inboard, top, right	1	
-18	60714-14		SKIN - Aileron, trailing edge, inboard, bottom, left	1	
	60714-15		SKIN - Aileron, trailing edge, inboard, bottom, right	1	
-19	60714-30		SKIN - Aileron, trailing edge, outboard, top, left	1	
	60714-29		SKIN - Aileron, trailing edge, outboard, top, right	1	
-20	60714-28		SKIN - Aileron, trailing edge, outboard, bottom, left	1	
	60714-27		SKIN - Aileron, trailing edge, outboard, bottom, right	1	
-21	60748-03		WEIGHT - Aileron balance	1	
-22	18379-00		TAB - Aileron trim	1	
-23	60714-26		REINFORCEMENT - Trailing edge	1	

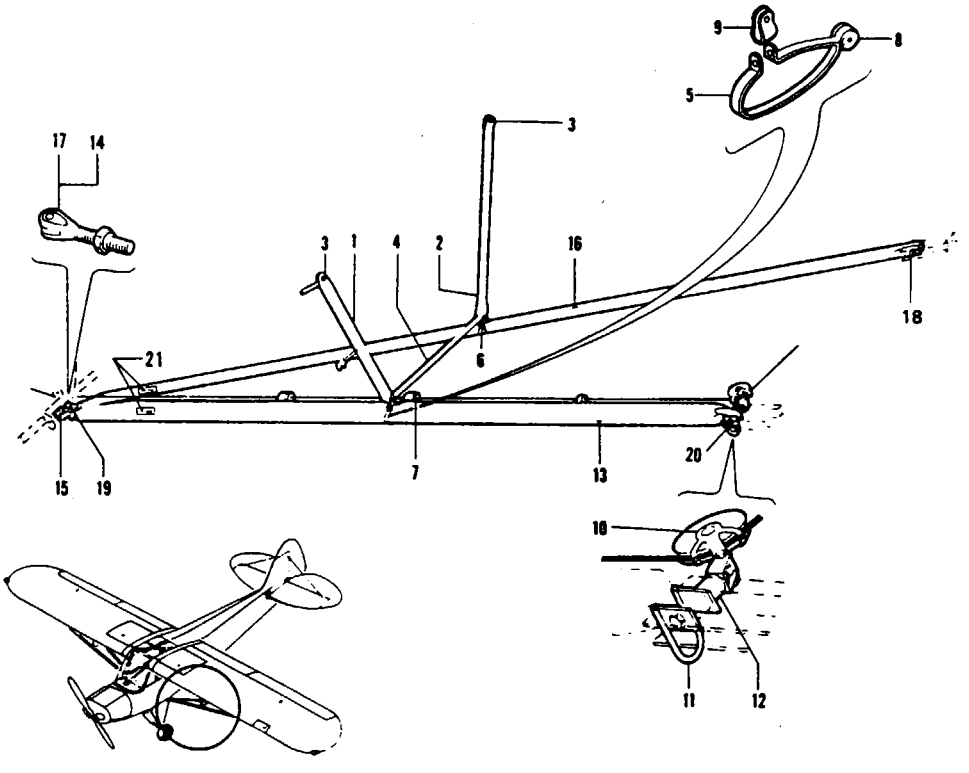

Figure 7. Strut Installation

PIPER PARTS CATALOG

Figure and Index Number	Part Number	Code	NOMENCLATURE	No. Req.	SERIAL NUMBERS AFFECTED
7-1	12931-00	C	STRUT - Jury, front (with pitot tube) '95", "105" and "125", LH	1	
	12571-02		STRUT - Jury, front, "135" and "150", LH	1	
	12571-02		STRUT - Jury, front, RH	1	
-2	12571-03		STRUT - Jury, rear	2	
-3	400 438		BOLT - (AN3-4A)	4	
	407 564		WASHER - (AN960-10)	4	
	406 681		NUT - (Elastic Stop Nut No. 22MO2)	4	
-4	12591-02		TUBE - Jury strut spacer	2	
-5	10654-02		CLAMP ASSEMBLY - Front jury strut	2	
-6	10656-00		CLAMP - Rear jury strut	2	
-7	40081-00		RING - Snap, cable fairlead	4	
-8	40701-00		FAIRLEAD - Cable, segment	8	
-9	80002-41		CLAMP - Jury strut	4	
-10	10552-00		HOUSING ASSEMBLY - Pulley, LH	1	
	10552-01		HOUSING ASSEMBLY - Pulley, RH	1	
-11	12345-04		BRACKET ASSEMBLY - Tie down	2	
-12	15631-02		BUSHING - Spacer	2	
-13	10098-03	B	STRUT ASSEMBLY - Lift front	2	
-14	14481-02	A	FORK ASSEMBLY	1	
-15	13241-00	D	BOLT - Lift strut attachment	2	
	404 395	D	NUT - (AN320-6)	2	
	424 059	D	PIN - Cotter (AN380-3-3)	2	
-16	10096-03		STRUT ASSEMBLY - Rear lift	2	
-17	14481-02		FORK ASSEMBLY	1	
-18	401 355		BOLT- (AN5-14A)	2	
	407 566		WASHER - (AN960-516)	2	
	406 683		NUT - (42E054)	2	
-19	13241-00	D	BOLT - Lift strut attachment	2	
	404 395	D	NUT - (AN320-6)	2	
	424 059	D	PIN - Cotter (AN380-3-3)	2	
-20	401 366		BOLT - (AN5-27A)	2	
	406 683		NUT - (Elastic Stop Nut No. 42E054)	2	
-21	80944-02	A	DECAL - No Step	4	

A - See latest revision of Piper Service Bulletin 157.
B - See latest revision of Piper Service Bulletin 910A for serial numbers 18-1 to 18-8309025.
C - See latest revision of Piper Service Bulletin 1044 for serial numbers 18-1 to 18-9004 and 18-7309016 to 18-8309025.
D- Reference latest revision to Service Bulletin 1172A related to inspection and replacement of the lift strut attachment bolts.

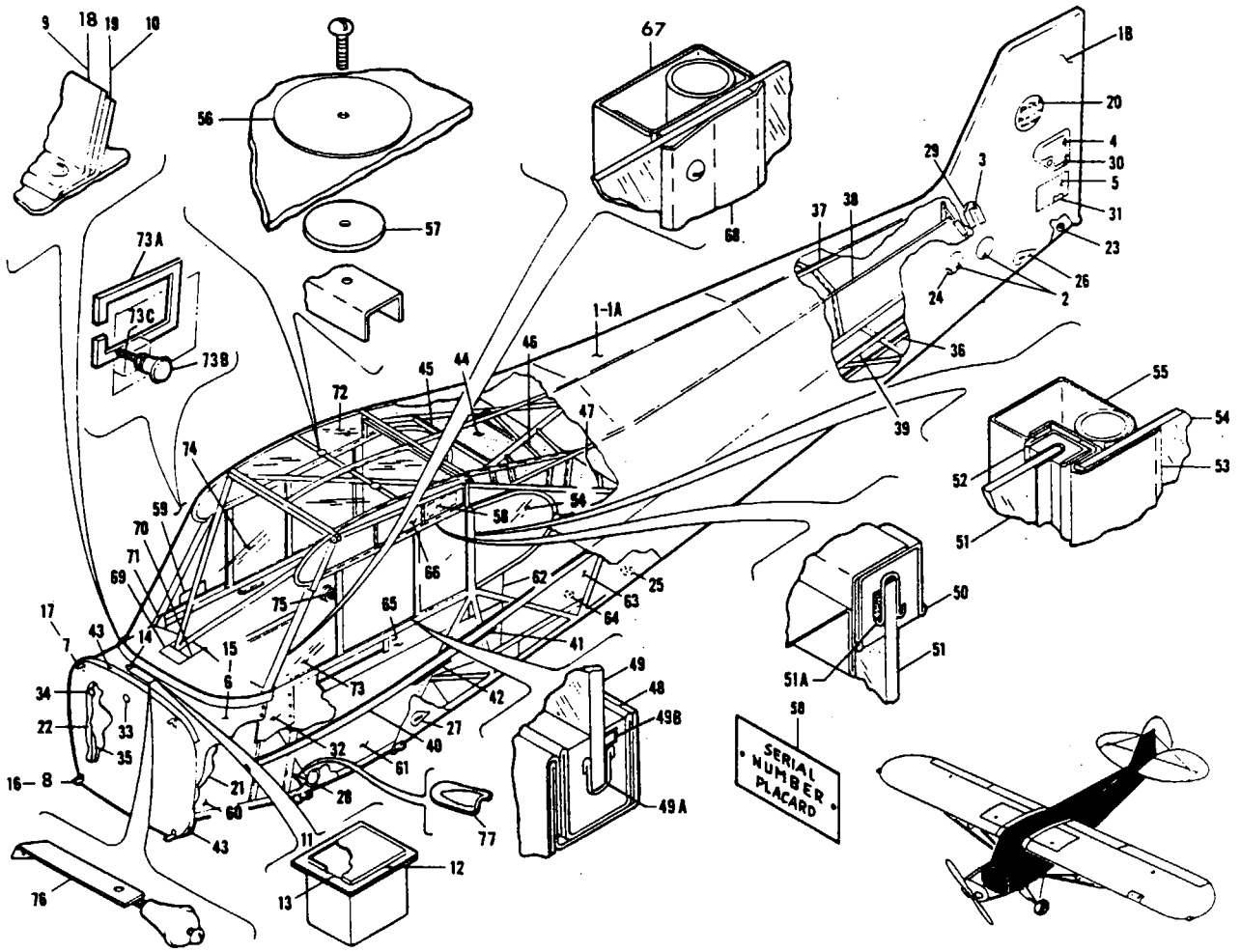

Figure 8. Covered Fuselage Assembly, Left View

Figure and Index Number	Part Number	Code	NOMENCLATURE	No. Req.	SERIAL NUMBERS AFFECTED
8-	12545	A	DRAWING - Fuselage Assembly, Complete		
	13255		DRAWING - Fuselage Assembly, Complete		(PA-18A only)
	12552		DRAWING - Fabric Installation, Fuselage		(PA-18 only) 18-1 to 18-5294
	13264		DRAWING - Fabric Installation, Fuselage		(PA-18A only)
	14486		DRAWING - Fuselage Assembly, Complete		(PA-18 only) 18-3771, 18-3781 and up
	14836		DRAWING - Fabric or Ceconite Installation, Fuselage		(PA-18 only) 18-5295 and up
-1	751 730		FUSELAGE ASSEMBLY - Fabric covered (with seat and floor) "95"	1	18-1 to 18-548 inclusive
	751 737		FUSELAGE ASSEMBLY - Fabric covered (with seat and floor) "105"	1	
	751 736		FUSELAGE ASSEMBLY - Fabric covered (with seat and floor) "95"	1	18-549 to 18-3013 inclusive
	751 738		FUSELAGE ASSEMBLY - Fabric covered (with seat and floor) "125"	1	(PA-18 only) 18-549 to 18-1969
	751 743		FUSELAGE ASSEMBLY - Fabric covered (with seat and floor) "135"	1	(PA-18 only) 18-1810 to 18-3013
	751 744		FUSELAGE ASSEMBLY - Fabric covered (with seat and floor) "125"	1	(PA-18A only) 18-1215 to 18-1969
	751 745		FUSELAGE ASSEMBLY - Fabric covered (with seat and floor) "135"	1	(PA-18A only) 18-1812 to 18-3013
	751 756		FUSELAGE ASSEMBLY - Fabric covered (with seat and floor) "95"	1	18-3014 and up
	751 754		FUSELAGE ASSEMBLY - Fabric covered (with seat and floor) "135"	1	(PA-18 only) 18-3014 to 18-3770, 18-3772 to 18-3780 inclusive
	751 755		FUSELAGE ASSEMBLY - Fabric covered (with seat and floor) "135"	1	(PA-18A only) 18-3014 to 18-3770, 18-3772 to 18-3785 inclusive
	751 765		FUSELAGE ASSEMBLY - Fabric covered (with seat and floor) "135" and "150"	1	(PA-18A only) 18-3771, 18-3786 and up
	751 766		FUSELAGE ASSEMBLY - Fabric covered (with seat and floor) "135" and "150"	1	(PA-18 only) 18-3771, 18-3781 to 18-8919 inclusive
	754 825		FUSELAGE ASSEMBLY - Ceconite covered (with seat and floor) "150"	1	18-8920 and up
-1a	459 110		ENVELOPE - Fuselage, ceconite	1	18-8920 and up
-1b	459 112		ENVELOPE - Vertical stabilizer, ceconite	1	18-8920 and up
-2	12761-02		COVER - Inspection	4	
	12761-02		COVER - Inspection (battery drain access)	1	(PA-18 only) 18-2850, 18-2857 and up
	12761-02		COVER - Inspection round, duster indicator installation	1	(PA-18A only) 18-3640 and up
-3	60571-00		COVER - Stabilizer yoke inspection, LH	1	
	60571-01		COVER - Stabilizer yoke inspection, RH	1	
-4	60742-00		PANEL - Tail inspection, LH	1	18-1 to 18-7609115 inclusive
	60742-01		PANEL - Tail inspection, RH	1	18-1 to 18-7609115 inclusive
	64835-00		PANEL - Tail inspection, LH	1	18-7609116 and up
	64835-01		PANEL - Tail inspection, RH	1	18-7609116 and up
-5	82461-00		COVER - Inspection, rectangular	1	(PA-18 only)
	82461-00		COVER - Inspection, rectangular	3	(PA-18A only)
			A - Used on PA-18 airplanes with serial numbers 18-1 to 18-3770 inclusive, 18-3772 to 18-3780 inclusive.		

Figure and Index Number	Part Number	Code	NOMENCLATURE	No. Req.	SERIAL NUMBERS AFFECTED
8-6	12381-00		COWL ASSEMBLY - Fuselage, "105", "125" and "135"	1	18-1 to 18-2167 inclusive
	12381-02		COWL ASSEMBLY - Fuselage, "135" and "150"	1	18-2168 to 18-5938 inclusive
	12381-03		COWL ASSEMBLY - Fuselage, "150"	1	18-5939 to 18-8019 inclusive
	14849-02		COWL ASSEMBLY - Fuselage, "150"	1	18-8020 and up
-7	12379-02		ANGLE - Cowl attachment	2	
-8	12379-00		ANGLE - Cowl attachment	2	
-9	12377-00		STRIP - Windshield, front	1	
-10	12378-00		STRIP - Windshield, rear	1	
-11	14059-00		BOX ASSEMBLY - Cold air vent, "135" and "150"	1	18-2168 and up
-12	14060-00		VALVE - "135" and "150"	1	18-2168 and up
-13	14075-00		SEAL - "135" and "150"	1	18-2168 and up
-14	14061-00		GASKET - Seal, "135" and "150"	1	18-2168 and up
-15	10789-02	A	COWL ASSEMBLY - Fuselage, "95"	1	
	10789-03	B	COWL ASSEMBLY - Fuselage, "95"	1	
-16	10797-00	C	ANGLE - Cowl attachment	2	
-17	10796-00	C	ANGLE - Cowl attachment	2	
-18	10794-00	C	STRIP - Windshield, front	1	
-19	10793-00	C	STRIP - Windshield, rear	1	
-20	12763-00	D	DECAL - Fin (456 371)	2	18-1 to 18-548 inclusive
-21	10933-00		BLANKET - Cowl insulator, LH	1	
	10933-01		BLANKET - Cowl insulator, RH	1	
-22	10934-00		BLANKET - Cowl insulator, front	1	
-23	80122-53		GROMMET - Drain	1	
-24	80122-49		GROMMET	4	
	80122-49		GROMMET - Access	1	(PA-18 only) 18-2850, 18-2857 and up
	80122-49		GROMMET - Inspection, cover, round, duster indicator installation	1	(PA-18A only) 18-3640 and up
-25	80122-51		GROMMET - Battery drain vent inlet with sealed battery box installation	1	(PA-18 only)
	85012-49		GROMMET - Battery drain and vent outlet	1	(PA-18 only) 18-2850, 18-2857 and up
	80122-51		GROMMET - (Flap cable and fuel lines)	4	(PA-18A only) 18-3014 and up
-26	60863-03		GROMMET	2	
-27	60863-05		GROMMET	2	
-28	10984-00		GROMMET	2	
-29	10292-00		GROMMET	2	
-30	10293-00		GROMMET	2	18-1 to 18-7609115 inclusive
	64834-00		GROMMET	2	18-7609116 and up
-31	80541-02		GROMMET - (3 per ship PA-18A)	4	
-32	12818-00		PANEL - Side, LH	1	
	12818-01		PANEL - Side, RH	1	
-33	80122-07		WASHER - Cowl attachment	3	
-34	80122-43		WASHER - Fibre	4	

A - Used on PA-18 "95" airplanes with serial numbers 18-1 to 18-5938 inclusive.
B - Used on PA-18 "95" airplanes with serial numbers 18-5939 and up.
C - Used on PA-18 "95" airplanes with serial numbers 18-1 and up.
D - Piper insignia on PA-18 and PA-18A airplanes with serial numbers 18-549 and up put on with silk screen.

PIPER PARTS CATALOG

Figure and Index Number	Part Number	Code	NOMENCLATURE	No. Req.	SERIAL NUMBERS AFFECTED
8-35	24032-09	C	COVER - Firewall, leather, brown	1	
	24032-18	D	COVER - Firewall, leather, green	1	
	24032-22		COVER - Firewall, blanket, black	1	18-3771, 18-3781 and up
-36	14978-00		STRINGER - Bottom	1	
-37	14983-03		STRINGER - Top	1	(PA-18 only)
-38	14984-02		STRINGER - Top, LH and RH	2	(PA-18 only)
	21621-27		STRINGER - Top, LH and RH	2	(PA-18A only)
-39	12735-03	A	STRINGER - Side, rear, LH, "161"	1	
	14979-00	B	STRINGER - Side, LH, "157"	1	
	14979-00		STRINGER - Side, RH, "157"	1	
-40	12735-02	A	STRINGER - Side, front, LH, "22"	1	
-41	11473-02	A	PLATE - Spacer, LH	2	
-42	11473-32	A	PLATE - Spacer, LH	1	
-43	180 810		WEBBING - Cowl (83891)	4'	
-44	12448-00		HEADLINING ASSEMBLY - Cockpit	1	(PA-18 only) 18-1 to 18-3013 inclusive
	12448-03		HEADLINING ASSEMBLY - Cockpit	1	(PA-18 only) 18-3014 to 18-7709147 inclusive
	12448-07		HEADLINING ASSEMBLY - Cockpit	1	18-7709148 and up
-45	12193-10		CHANNEL - No. 1, headlining arch	1	(PA-18 only)
-46	12193-08		CHANNEL - No. 2, headlining arch	1	(PA-18 only)
-47	12193-09		CHANNEL - No. 3, headlining arch	1	(PA-18 only)
-48	11432-11		CHANNEL - Weatherstrip	1	
-49	12254-00		WINDOW ASSEMBLY - Sliding, front	1	
-49a	11648-02		* CHANNEL - Weatherstrip	2	
-49b	12254-03		* STIFFENER - Front window	1	
-50	11432-10		CHANNEL - Weatherstrip	1	
-51	12255-00		WINDOW ASSEMBLY - Sliding rear	1	
-51a	11648-02		* CHANNEL - Weatherstrip	2	
-52	11432-09		CHANNEL - Weatherstrip, front and rear	2	
-53	12259-00		TRIM STRIP - Sliding window, exterior	1	
-54	10545-00		WINDOW - Rear enclosure	2	
-55	13091-00		TRIM STRIP - Sliding window, interior	1	
-56	81342-45		WASHER	2	
-57	85012-14		WASHER	2	
-58	13988-00		PLACARD - Operation limitation	1	(PA-18A only)
-59	13659-00		PLACARD - Restricted category, upper door	1	(PA-18A only)
-60	10776-02		PANEL - Cockpit, front, LH	1	
-61	12308-03		PANEL - Cockpit, center, "95", LH	1	
	12308-05		PANEL - Cockpit, center, "105", "135" and "150", LH	1	(PA-18 only)
	13274-00		PANEL - Cockpit, center, LH	1	(PA-18A only)

A - Used on airplanes with serial numbers 18-1 to 18-771 inclusive, 18-773, 18-776 and 18-778.
B - Used on airplanes with serial numbers 18-772, 18-774, 18-775, 18-779 and up.
C - Used on airplanes with serial numbers 18-1 to 18-3770 inclusive and 18-3772 to 18-3780 inclusive.
D - Used on airplanes with serial numbers 18-3014 to 18-3770 inclusive, 18-3771 to 18-3780 inclusive.

When ordering, always specify Part Number, Description and Serial Number of Aircraft

PIPER PARTS CATALOG

Figure and Index Number	Part Number	Code	NOMENCLATURE	No. Req.	SERIAL NUMBERS AFFECTED
8-62	12314-00		PANEL ASSEMBLY - Rear of throttle panel, LH	1	(PA-18 only)
	12314-04		PANEL ASSEMBLY - Rear of throttle panel, LH	1	(PA-18A only)
-63	12444-00		PANEL - Cockpit, rear, LH	1	(PA-18 only)
	13252-00		PANEL - Cockpit, rear, LH	1	(PA-18A only)
-64	434 138		* GROMMET - (AN931-10-14)	1	(PA-18A only)
-65	12309-00		PANEL ASSEMBLY - Throttle control "105", "125", "135" and "150" (Used when electrical equipment is not installed, "95"), LH	1	
	12309-04		PANEL ASSEMBLY - Throttle control, "95" (When electrical equipment is installed)	1	
-66	12617-03		PANEL - Upper trim, LH	1	
-67	12261-00		TRIM STRIP - Windshield, interior, LH	1	
	12260-00		TRIM STRIP - Windshield, interior, RH	1	(PA-18 only)
	14490-00		TRIM STRIP - Windshield, interior, RH	1	(PA-18A only)
-68	12264-00		TRIM STRIP - Windshield, exterior, LH	1	
	12264-01		TRIM STRIP - Windshield, exterior, RH	1	
-69	13373-02		PLATE - Trim, "105", "125", "135" and "150"	1	18-549 and up
-70	13373-03		PLATE - Trim, "105", "125" and "135"	1	18-549 and up
	13373-03		PLATE - Trim, "150"	1	18-549 to 18-8019 inclusive
	13373-04		PLATE - Trim, "150"	1	18-8020 and up
-71	11994-22		GUSSET - Front enclosure, inside	1	18-1970 and up
-72	13433-00		WINDOW - Top deck	1	(PA-18 only) 18-1 to 18-3013 inclusive
	12249-00		WINDOW - Top deck	1	(PA-18A only) 18-1215 to 18-3013 inclusive
	13433-02		WINDOW ASSEMBLY - Top deck, tinted	1	(PA-18 only) 18-3014 and up
	12249-02		WINDOW ASSEMBLY - Top deck, tinted	1	(PA-18A only) 18-3014 and up
-73	12253-00		WINDOW - Front, LH	1	18-1 to 18-3013 inclusive
	14275-00		WINDOW ASSEMBLY - Front, left	1	18-3014 and up
-73a	13914-00		* GASKET - Ventilator	1	18-3014 and up
-73b	471 059		* KNOB - Ventilator	1	18-3014 and up
-73c	13903-00		* SCREW - Ventilator assembly	1	18-3014 and up
-74	12248-00		WINDSHIELD - "95"	1	
	12430-00		WINDSHIELD - "105", "125", "135" and "150"	1	
-75	99479-02	V	GAUGE - Air temperature	1	
-76	13483-00		ARM ASSEMBLY - Air vent control, "135" and "150"	1	18-2168 and up
-77	14435-00		COVER - Brake line	2	18-3014 and up

V - These parts must be ordered from Service Spares Department, Piper Aircraft Corporation, Vero Beach, Florida.

When ordering, always specify Part Number, Description and Serial Number of Aircraft

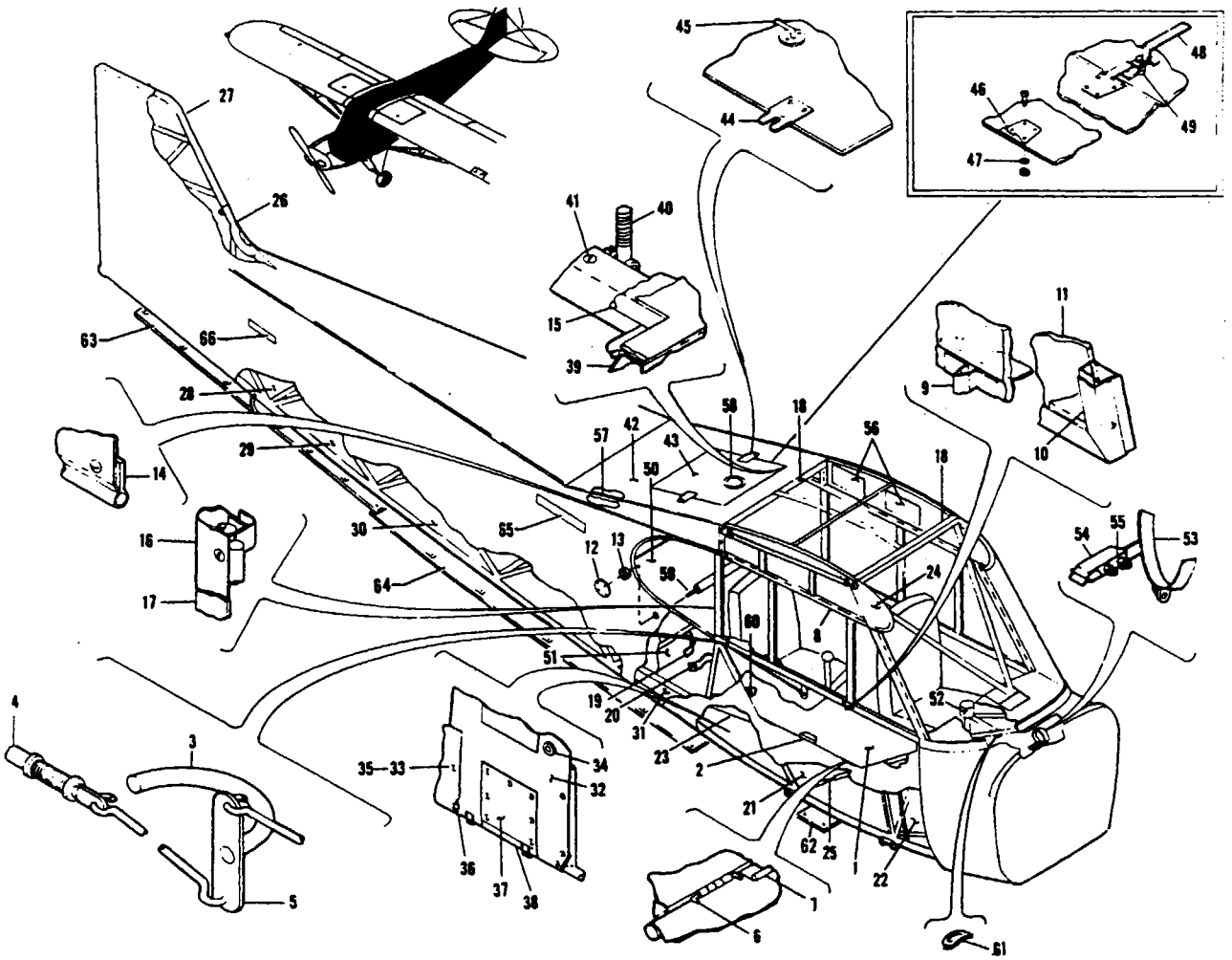

Figure 9. Covered Fuselage Assembly, Right View

Figure and Index Number	Part Number	Code	NOMENCLATURE	No. Req.	SERIAL NUMBERS AFFECTED
9-1	50183-04		DOOR ASSEMBLY - Fuselage, fabric covered and doped	1	18-1 to 18-5863 inclusive
	50183-07		DOOR ASSEMBLY - Fuselage, fabric covered and doped	1	18-5864 to 18-8919 inclusive
	50183-11		DOOR ASSEMBLY - Fuselage, ceconite covered and doped	1	18-8920 and up
-2	12257-00		FRAME ASSEMBLY	1	18-1 to 18-5863 inclusive
	12257-12		FRAME ASSEMBLY	1	18-5864 and up
-3	50173-12		HANDLE	1	18-1 to 18-3013 inclusive
	14216-00		HANDLE ASSEMBLY - Aluminum (NOTE: This handle used on all replacement doors)	1	18-3014 and up
-4	50131-00		PLUNGER ASSEMBLY - Complete	2	
-5	50192-00		LINK ASSEMBLY	1	
-6	86092-15		PIN - Hinge	2	
-7	52841-00		WEATHERSTRIP ASSEMBLY - Lower door (brown)	1	18-1 to 18-3013 inclusive
	52841-07		WEATHERSTRIP ASSEMBLY - Lower door (green)	1	18-3014 and up
	52841-13		WEATHERSTRIP ASSEMBLY - Enclosure door (cadillac red)	1	18-4618 to 18-5803 inclusive, 18-5805 to 18-6115 inclusive
	52841-10		WEATHERSTRIP ASSEMBLY - Enclosure door (red)	1	18-3771, 18-3786 to 18-4617
	52841-19		WEATHERSTRIP ASSEMBLY - Enclosure door (red)	1	18-5804, 18-6116 to 18-7520
	52841-22		WEATHERSTRIP ASSEMBLY - Enclosure door (red)	1	18-7521 to 18-7609090 inclusive, 18-7609092 to 18-7609157 incl.
	52841-24		WEATHERSTRIP ASSEMBLY - Enclosure door (black and white)	1	18-7609091, 18-7709001 and up
	52841-26		WEATHERSTRIP ASSEMBLY - Enclosure door (black)	1	18-7609091, 18-7709001 and up
-8	12256-00		DOOR ASSEMBLY - Upper	1	18-1 to 18-231 inclusive
	12256-10		DOOR ASSEMBLY - Upper	1	(PA-18 only) 18-232 and up
	12256-11		DOOR ASSEMBLY - Upper	1	(PA-18A only)
-9	83481-00		STUD - Door catch	1	
-10	10049-02		TRIM STRIP - Front	1	
-11	12279-00		WINDOW	1	
-12	13254-00		PLATE - Access, rear support fitting	2	(PA-18A only)
-13	85012-49		GROMMET - Access plate	2	(PA-18A only)
-14	187 610		MOULDING - Upper and lower enclosure doors (Die No. 1923 Cont. Rubber Works)	9'	
-15	187 536		MOULDING - Hopper cover (PAC No. 14157)	7'	(PA-18A only)
-16	12266-03		STRIP - Moulding attachment	1	18-1 to 18-548 inclusive
	13093-00		STRIP - Moulding attachment	1	18-549 and up
-17	10668-00		TRIM STRIP - Window, rear	1	
-18	12265-00		TRIM STRIP - Window installation, top deck	2	
-19	12036-03		STRAP ASSEMBLY - Baggage, tip end	1	(PA-18 only)
-20	12036-02		STRAP ASSEMBLY - Baggage, buckle end	1	(PA-18 only)
-21	10930-00		PANEL - Cockpit, center, RH	1	(PA-18 only)
	13258-00		PANEL - Cockpit, center, RH	1	(PA-18A only)
-22	12311-00		PANEL - Cockpit, front, RH	1	
-23	12445-00		PANEL - Cockpit, rear, RH	1	(PA-18 only)
	13259-02		PANEL - Cockpit, rear, RH	1	(PA-18A only)
-24	12618-00		PANEL - Cockpit, upper right (when electrical equipment is not installed) "95", "105" and "125"	1	
	12618-02	A	PANEL - Cockpit, upper right (when electrical equipment is installed) "95", "105" and "125"	1	
	12618-03	B	PANEL - Cockpit, upper right, fuel gauge indicator (when electrical equipment is not installed)	1	

A - Used on PA-18 airplanes 18-1 to 18-3770 inclusive and 18-3772 to 18-3785 inclusive and on PA-18A airplanes 18-1215 to 18-1969 inclusive.
B - Used when the fuel tank is installed in the right wing.

PIPER PARTS CATALOG

Figure and Index Number	Part Number	Code	NOMENCLATURE	No. Req.	SERIAL NUMBERS AFFECTED
9-24	12618-04	A,B	PANEL - Cockpit, upper right (when electrical equipment is installed)	1	
	14337-02	B,C	PANEL - Cockpit, upper right (when electrical equipment is installed) "135" and "150"	1	
	14337-03	F	PANEL - Cockpit, upper right (when electrical equipment is installed) "95"	1	18-3771, 18-3781 and up
-25	180 497		FELT - Chafing, SAE F-50, .065 x 1/2"	19'	
-26	60602-00		FAIRING - Fin leading edge	1	
-27	40592-00		FIN ASSEMBLY - Uncovered	1	
-28	13265-00	D,L	PANEL - Fuselage, bottom, No. 1	1	
-29	13266-00	D,L	PANEL - Fuselage, bottom, No. 2	1	
-30	13267-00	D,L	PANEL - Fuselage, bottom, No. 3	1	
-31	13268-00	D,L	PANEL - Fuselage, bottom, No. 4	1	
-32	13269-00	K	PANEL - Fuselage, bottom, No. 5	1	
	15900-02		PANEL - Fuselage, bottom	1	18-7609116 and up
-33	487 563	D,G	STUD - No. 5-0-140	13	
	463 368	D,G	GROMMET - GO-5-93	13	
-34	434 142	K	GROMMET - (AN931-14-20)	1	
-35	487 288	D,G	FASTENER - Bottom fuselage panel (lion spring No. 5-295)	13'	
-36	85012-47	D,G	WASHER - Fibre, bottom panel installation	48	
-37	13260-00	K	PANEL - Cover, bottom hopper opening	2	
-38	13262-00	K	FAIRING - Fuselage (at bottom, outside hopper opening) LH	1	
	13263-00	K	FAIRING - Fuselage (at bottom, outside hopper opening) RH	1	
-39	13257-00	D	FRAME ASSEMBLY - Hopper opening	1	

A - Used on PA-18 airplanes with serial numbers 18-1 to 18-4308 inclusive, 18-4311 to 18-4345 inclusive, and 18-4347 to 18-4361 inclusive.

B - Used when the fuel tank is installed in the right wing.

C - Used on PA-18 airplanes with serial numbers 18-4309, 18-4310, 18-4346, 18-4362 and up.

D - Used on PA-18A airplanes with serial numbers 18-1215 and up.

E - Used on PA-18A airplanes with serial numbers 18-1262 to 18-2477 inclusive, 18-2480, 18-2481, 18-2484, 18-2485, 18-2489, 18-2490, 18-2492, 18-2497, 18-2498, 18-2506 and 18-2507.

F - Used on PA-18 "95" airplanes with fuel tank in left wing only.

G - Used on PA-18 airplanes with serial numbers 18-3771, 18-3781 and up if airplane incorporates metal belly panels.

H - Used on PA-18A airplanes with serial numbers 18-2478 18-2479, 18-2482, 18-2483, 18-2486, 18-2487, 18-2488, 18-2491, 18-2493, 18-2494, 18-2495, 18-2496, 18-2499 to 18-2505 inclusive and 18-2508 and up.

J - Providing your aircraft is not equipped with filler neck and cap, it will be necessary to order cap, Part No. 14102-00 when ordering these parts.

K - Used on PA-18A with serial numbers 18-1215 to 18-7520 inclusive, and PA-18 with serial numbers 18-3771, 18-3871 to 18-7609115 inclusive if airplane incorporates metal belly panels.

L - Used on PA-18 with serial numbers 18-3771, 18-3781 to 18-7809040 inclusive if airplane incorporates metal belly panels.

Figure and Index Number	Part Number	Code	NOMENCLATURE	No. Req.	SERIAL NUMBERS AFFECTED
9-40	13301-00	C	ROD - Hopper door attachment (threaded)	2	
-41	406 779	F	NUT - Anchor (Boot No. W2SE 1032)	36	
-42	13256-00	C	COVER ASSEMBLY - Hopper, top deck	1	
	14100-00	A,B	COVER ASSEMBLY - Hopper, top deck	1	
-43	13308-00	C	DOOR ASSEMBLY - Hopper, top deck	1	
	13308-10	AB	DOOR ASSEMBLY - Hopper, top deck	1	
-44	13307-00	C	FITTING - Door attachment	2	
-45	13644-00	D	VENT ASSEMBLY - Hopper	1	
-46	14092-00	A	CATCH - Door	2	
-47	85012-76	A	WASHER - Door catch attachment	4	
-48	464 018	A	HANDLE - Door (No. 2002)	2	
-49	453 364	A	BRACKET - Handle attachment (No. 2002B)	2	
-50	13471-00	E	PANEL - Baggage compartment, rear	1	
	13471-02		PANEL - Baggage compartment, rear (when electrical equipment is installed)	1	(PA-18 only) 18-665 to 18-3013 inclusive
	13283-03		PANEL - Baggage compartment, rear (when electrical equipment is not installed)	1	(PA-18A only) 18-1215 to 18-3013 inclusive
	13283-00		PANEL - Baggage compartment, rear (when electrical equipment is installed)	1	(PA-18A only) 18-1215 to 18-3013 inclusive
	14221-03		PANEL - Baggage compartment, rear (when electrical equipment is not installed)	1	(PA-18A only) 18-3014 and up
	14221-00		PANEL - Baggage compartment, rear (when electrical equipment is installed)	1	(PA-18A only) 18-3014 and up
	13471-03		PANEL - Baggage compartment, rear	1	(PA-18 only) 18-3014 and up
-51	12284-00		PANEL - Baggage compartment, bottom (when electrical equipment is installed)	1	(PA-18 only) 18-1 to 18-664 inclusive
	12284-02		PANEL - Baggage compartment, bottom (when electrical system is not installed, and on all airplanes with serial numbers 18-665 and up when electrical equipment is installed)	1	

A - Used on PA-18A airplanes with serial numbers 18-2478, 18-2479, 18-2482, 18-2483, 18-2486, 18-2487, 18-2488, 18-2491, 18-2493, 18-2494, 18-2495, 18-2496, 18-2499 to 18-2505 inclusive and 18-2508 and up.

B - Providing your aircraft is not equipped with filler neck and cap, it will be necessary to order cap part number 14102-00 when ordering these parts.

C - Used on PA-18A airplanes with serial numbers 18-1262 to 18-2477 inclusive, 18-2480, 18-2481, 18-2484, 18-2485, 18-2489, 18-2490, 18-2492, 18-2497, 18-2498, 18-2506 and 18-2507.

D - Used on PA-18A airplanes with serial numbers 18-1262 to 18-2492 inclusive, 18-2495, 18-2497, 18-2498, 18-2500, 18-2501, 18-2502, 18-2505 to 18-2508 inclusive.

E - Used on PA-18 airplanes with serial numbers 18-1 to 18-664 inclusive, and on all PA-18 airplanes with serial numbers 18-665 to 18-3013 inclusive when electrical equipment is not installed, and on all PA-18 "95" airplanes up to and including 18-3013.

F - Used on PA-18A airplanes with serial numbers 18-1215 and up.

PIPER PARTS CATALOG

Figure and Index Number	Part Number	Code	NOMENCLATURE	No. Req.	SERIAL NUMBERS AFFECTED
9-52	12855-00		LOCK - Control stick (used when no radio is installed)	1	
	14582-00		LOCK - Control stick (used when Lear LTRA-5, LTRA-6, NARCO VTLR-1, VTLR-2, VHT-1 and VTR-1 are installed)	1	
	13364-00		LOCK - Control stick (used when Bendix Radio PAT-50 Transmitter and PAR-70A Receiver and PATR-10A is installed)	1	
	14838-00		LOCK - Control stick (used when Piper PTR-1 is installed)	1	18-8020 and up
-53	11299-04		CLAMP ASSEMBLY - Control stick lock (used when no radio is installed)	1	
	13367-00		CLAMP ASSEMBLY - Control stick lock (used when Bendix PAT-50 Transmitter and PAR-70A Receiver and PATR-10A is installed)	1	
-54	52745-00		CATCH - Control lock	1	18-1 to 18-5294 inclusive
-55	13437-00		BRACKET - Control lock catch attachment (used when Lear LTRA-5, LTRA-6, NARCO VTLR-2 and VTR-1 are installed)	1	18-1 to 18-5294 inclusive
-56	13614-02		ENVELOPE ASSEMBLY - Airworthiness certificate and operations limitations	2	(PA-18A only) 18-1215 to 18-3770, 18-3772 to 18-3785 inclusive
	13614-07		ENVELOPE ASSEMBLY - Airworthiness certificate and operations limitations	2	(PA-18A only) 18-3771, 18-3786 and up
-57	406 863		RIVNUT - (A8K75) Hopper cover attachment	25	
-58	454 035	A	CAP - Top deck door (when hopper not installed) (No. CD-297)	1	
-59	13284-02		ROD - Attachment, rear seat	1	(PA-18A only)
-60	13645-00		BUMPER - Rubber, hopper protector at rear seat tube, RH	1	(PA-18A only)
	13945-23		STRIP - Rubber top deck window installation, rear	2	(PA-18A only) 18-3014 and up
-61	408 813		WASHER - Control lock installation (3535-10-02)	4	18-3771, 18-3781 to 18-8019 inclusive
-62	82461-00		COVER - Inspection, retangular	1	
-63	60723-02		PANEL ASSEMBLY - Fuselage, bottom, rear	1	18-7809041 and up
-64	60724-02		PANEL ASSEMBLY - Fuselage, bottom, center	1	18-7809041 and up
-65	15999-02		DECAL - "Super Cub"	2	18-7709001 to 18-7709198 incl.
	49374-03		DECAL - "Piper"	2	18-7809001 to 18-7809188 incl.
	60753-02		DECAL - "Piper Super Cub"	2	18-7909001 and up
-66	22859-00		DECAL - "Piper"	2	18-7747 to 18-7609157 incl.

A - Used on PA-18A airplanes with serial numbers 18-2493, 18-2494, 18-2496, 18-2499, 18-2503, 18-2504, 18-2509 and up.

When ordering, always specify Part Number, Description and Serial Number of Aircraft

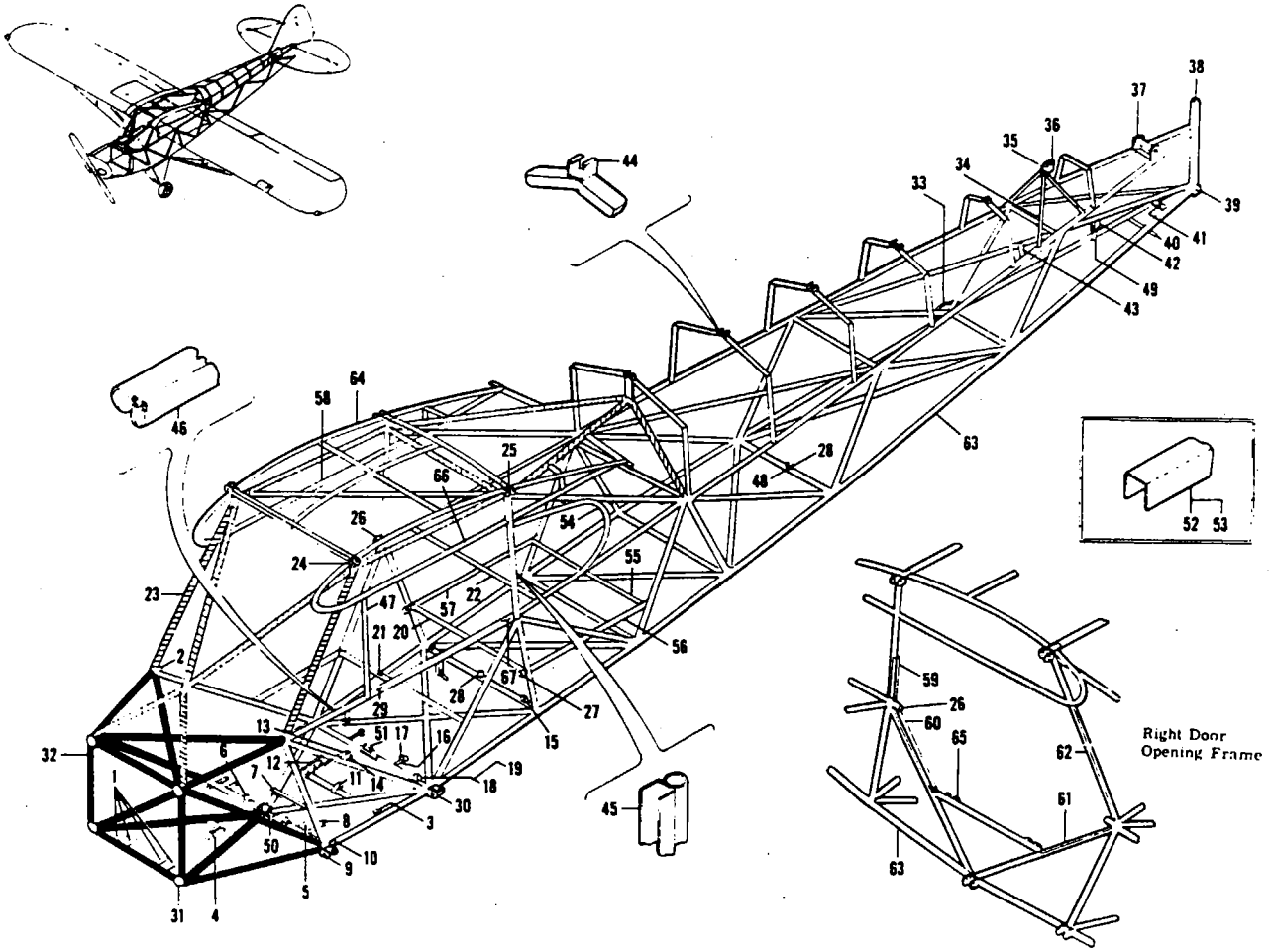

Figure 10. Fuselage Frame Assembly

PIPER PARTS CATALOG

Figure and Index Number	Part Number	Code	NOMENCLATURE	No. Req.	SERIAL NUMBERS AFFECTED
10-	12446		DRAWING - Fuselage Frame and Super Structure		(PA-18 only)
	13250		DRAWING - Fuselage Frame and Super Structure		(PA-18A only)
	12183		DRAWING - Frame Assembly, Fuselage		(PA-18 only)
	13220		DRAWING - Frame Assembly, Fuselage		(PA-18A only)
-1	24121-02		FITTING - Rudder pedal attachment, front	4	
-2	21752-03		STOP ASSEMBLY - Fuselage door, front	1	
-3	24101-00		FITTING - Floorboard attachment (8 per ship PA-18A)	6	
-4	12179-00		BRACKET - Elevator cable pulley	2	
-5	24121-03		FITTING - Rudder pedal attachment, rear	4	
-6	10466-09		FITTING - Clamp, front seat installation, front	2	
-7	10134-00		CHANNEL - Brake unit support	1	
-8	12777-00		FITTING ASSEMBLY - Flap lever	1	
-9	21272-02	A	FITTING ASSEMBLY - Landing gear, front	2	
	21272-03		FITTING ASSEMBLY - Landing gear, front	2	18-3771, 18-3781 and up
-10	81272-15		GUSSET - Front landing gear fitting	2	
-11	81332-09		FITTING - Clamp, front seat installation, rear	2	
-12	12835-00	B	PLATE - Fuel shut off valve, mounting	1	
	14308-00	C	PLATE - Fuel shut off valve, mounting	1	
-13	21571-01		BRACKET - Stabilizer adjustment crank, right	1	
-14	21571-00		BRACKET - Stabilizer adjustment crank, left	1	
-15	11692-02		BRACKET - Rudder cable pulley	2	
-16	20841-00		STOP - Torque tube horn, left	1	
	20841-01		STOP - Torque tube horn, right	1	
-17	85061-00		CAPSCREW - Stop	2	
-18	20951-00		PLATE - Fuselage aileron pulley housing, rear left	1	
	20951-01		PLATE - Fuselage aileron pulley housing, rear right	1	
-19	20961-00		PLATE - Fuselage aileron pulley housing, front left	1	
	20961-01		PLATE - Fuselage aileron pulley housing, front right	1	
-20	12178-03		TUBE - Rear seat bottom, rear	1	(PA-18 only)
-21	12178-02		TUBE - Rear seat bottom, front	1	(PA-18 only)
-22	10818-00		TUBE - Square, rear seat back	1	(PA-18 only)
-23	752 987		TOP DECK SECTION ASSEMBLY - Fuselage frame	1	(PA-18A only)
	752 978		TOP DECK SECTION ASSEMBLY - Fuselage frame	1	(PA-18 only)
-24	12767-00		* FITTING - Wing hinge, front left	1	
	12767-01		* FITTING - Wing hinge, front right	1	
-25	11821-00		* FITTING - Wing hinge, rear left	1	
	11821-01		* FITTING - Wing hinge, rear right	1	
-26	21752-02		STOP ASSEMBLY - Fuselage door, rear	1	
-27	11829-03		FITTING - Rear safety belt attachment	2	
-28	11692-00		BRACKET - Elevator cable pulley	2	
-29	10565-00		BRACKET ASSEMBLY - Throttle (with tube)	1	

A - Used on airplanes with serial numbers 18-1 to 18-3770, 18-3772 to 18-3780 inclusive.

B - Used on airplanes with serial numbers 18-1 to 18-3301 inclusive, 18-3303, 18-3305, 18-3309, 18-3315 and 18-3317 to 18-3380 inclusive.

C - Used on airplanes with serial numbers 18-3302, 18-3304, 18-3306, 18-3307, 18-3308, 18-3310, 18-3311, 18-3312, 18-3313, 18-3314, 18-3316, 18-3381 and up.

When ordering, always specify Part Number, Description and Serial Number of Aircraft

PIPER PARTS CATALOG

Figure and Index Number	Part Number	Code	NOMENCLATURE	No. Req.	SERIAL NUMBERS AFFECTED
10-30	12184-02		FITTING - Landing gear and lift strut, left rear	1	
	12184-03		FITTING - Landing gear and lift strut, right rear	1	
-31	82341-02		BUSHING - Engine mount bulkhead	4	
-32	751 376		BULKHEAD SECTION ASSEMBLY - Fuselage frame	1	
-33	20652-00		HANDLE - Fuselage fitting (2 per ship PA-18A)	1	
-34	80022-20		BEARING - Stabilizer screw, lower	1	
-35	20491-03		BEARING - Stabilizer screw, upper	1	
-36	20491-02		BRACKET - Fin, front post attachment	1	
-37	21161-00		SUPPORT ASSEMBLY - Stabilizer	1	
-38	22412-00		TAIL POST ASSEMBLY	1	
-39	20611-00	A	FITTING - Tail wheel spring attachment	1	
	20611-02	B	FITTING - Tail wheel spring attachment	1	
-40	80292-15	C	FITTING - Tail tie rod attachment	2	
-41	20631-00		FITTING - “U”, tail wheel spring attachment	1	
-42	11692-02		BRACKET - Lower bungee cable pulley attachment, seaplane, “105”	1	
-43	20551-00		BRACKET - Stabilizer adjustment idler	1	18-1 to 18-548 inclusive
-44	20391-00		CLIP - Stringer attachment (17 per ship PA-18A}	25	
-45	12205-06		CHANNEL - Window	1	
-46	10061-00		CHANNEL - Window, front, bottom, LH	1	
-47	12206-00		CHANNEL - Window	1	
-48	12180-00		BRACKET - Elevator cable pulley, lower	1	
-49	11207-03		GUARD - Bungee cable pulley, “105”	1	
-50	20981-02		BRACKET ASSEMBLY - Torque tube, front bearing	1	
-51	20751-00		BRACKET ASSEMBLY - Torque tube, rear bearing	1	
-52	750 283		CHANNEL - “U” steel 3/8” x.020 (6’ pieces)	1	
-53	750 284		CHANNEL - “U” steel 1 /4” x.016 (6’ pieces)	1	
-54	10058-00		CHANNEL - Rear window	2	
-55	11408-12		ANGLE - Baggage compartment support, rear	1	(PA-18 only)
-56	11408-14		ANGLE - Baggage compartment support, LH	1	(PA-18 only)
-57	11408-13		ANGLE - Baggage compartment support, RH	1	(PA-18 only)
-58	12205-02		CHANNEL - Upper enclosure door, top	1	
-59	12205-05		CHANNEL - Upper enclosure door, rear	1	
-60	12205-04		CHANNEL - Lower enclosure door, rear	1	
-61	12205-03		CHANNEL - Lower enclosure door, front	1	
-62	12202-00		CHANNEL - Windshield, LH	1	
	12200-00		CHANNEL - Windshield, RH	1	
-63	12446-03		FUSELAGE FRAME AND SUPER STRUCTURE ASSEMBLY	1	(PA-18 only) 18-549 to 18-3013 inclusive
	13250-00		FUSELAGE FRAME AND SUPER STRUCTURE ASSEMBLY	1	(PA-18A only) 18-1215 to 18-3013 inclusive
	12446-00		FUSELAGE FRAME AND SUPER STRUCTURE ASSEMBLY	1	18-1 to 18-548 inclusive

A - Used on airplanes with serial numbers 18-1 to 18-848 inclusive, 18-969 to 18-998 inclusive, 18-1027 to 18-1038 inclusive, 18-1040 to 18-1056 inclusive and 18-1058.

B - Used on airplanes with serial numbers 18-849 to 18-968 inclusive, 18-999 to 18-1026 inclusive, 18-1039, 18-1057, 18-1059 and up

C - See latest revision of Piper Service Bulletin 706B for serial numbers 18-8602 to 18-8109013.

When ordering, always specify Part Number, Description, and Serial Number of Aircraft

PIPER PARTS CATALOG

Figure and Index Number	Part Number	Code	NOMENCLATURE	No. Req.	SERIAL NUMBERS AFFECTED
10-63	12446-05	A	FUSELAGE FRAME AND SUPER STRUCTURE ASSEMBLY	1	
	13250-02	B	FUSELAGE FRAME AND SUPER STRUCTURE ASSEMBLY	1	
	12446-06	C	FUSELAGE FRAME AND SUPER STRUCTURE ASSEMBLY	1	
	12446-07	E	FUSELAGE FRAME AND SUPER STRUCTURE ASSEMBLY	1	
	13250-03	D	FUSELAGE FRAME AND SUPER STRUCTURE ASSEMBLY	1	
-64	752 979		TOP DECK SECTION ASSEMBLY - Fuselage super structure	1	(PA-18 only)
	752 988		TOP DECK SECTION ASSEMBLY - Fuselage super structure	1	(PA-18A only)
-65	10300-02		HINGE - Lower enclosure door	2	
-66	12203-00		CHANNEL - Sliding window, top	1	
-67	11546-02		CHANNEL - Sliding window, bottom	1	

A - Used on PA-18 airplanes with serial numbers 18-3014 to 18-3770 inclusive, 18-3772 to 18-3780 inclusive.
B - Used on PA-18A airplanes with serial numbers 18-3014 to 18-3770 inclusive, 18-3772 to 18-3785 inclusive.
C - Used on PA-18 airplanes with serial numbers 18-3771, 18-3781 and up.
D - Used on PA-18A airplanes with serial numbers 18-3771, 18-3786 and up.
E - Used on PA-18 airplanes with serial numbers 18-3771, 18-3781 and up if airplane incorporates metal belly panels.

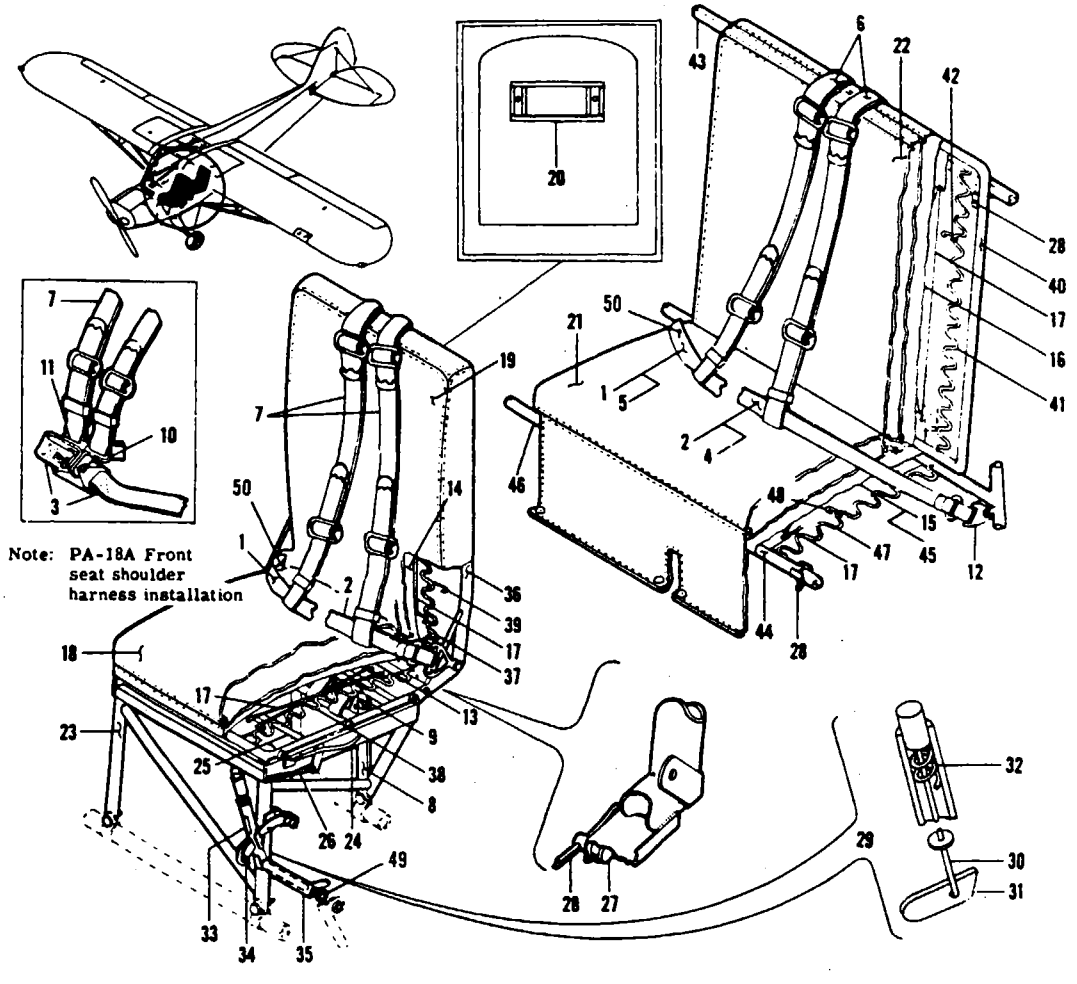

Figure 11. Seats Installation

PIPER PARTS CATALOG

Figure and Index Number	Part Number	Code	NOMENCLATURE	No. Req.	SERIAL NUMBERS AFFECTED
11-	12615		DRAWING - Shoulder Harness and Seats Installation		(PA-18 only) 18-1 to 18-3013 inclusive
	13275		DRAWING - Shoulder Harness and Seats Installation		(PA-18A only) 18-1215 to 18-5803, 18-5805 to 18-6115 inclusive
	14214		DRAWING - Shoulder Harness and Seats Installation		(PA-18 only) 18-3014 to 18-5803, 18-5805 to 18-6115 inclusive
	14949		DRAWING - Shoulder Harness and Seats Installation		(PA-18A only) 18-6118 and up
	14950		DRAWING - Shoulder Harness and Seats Installation		(PA-18A only) 18-5804, 18-6116 and up
-1	451 341	A	BELT ASSEMBLY - Safety, front and rear, tip end (13409-05), RH	2	
-2	451 340	A	BELT ASSEMBLY - Safety, front and rear, buckle end (13409-04), LH	2	
-3	451 342		BELT ASSEMBLY - Safety, front seat (AN type B-14) (buckle and tip end)	1	(PA-18A only)
-4	451 338		BELT ASSEMBLY - Safety, rear, left buckle end (13409-02)	1	(PA-18A only) 18-1215 to 18-3013 inclusive
-5	451 339		BELT ASSEMBLY - Safety, rear, right tip end (13409-03)	1	(PA-18A only) 18-1215 to 18-3013 inclusive
-6	13129-03		STRAP ASSEMBLY - Rear	2	(PA-18 only) 18-1 to 18-4617 inclusive
	13129-05		STRAP ASSEMBLY - Rear, black	2	18-4618 and up
-7	13129-02		STRAP ASSEMBLY - Front	2	
	13129-04		STRAP ASSEMBLY - Front, black	2	18-4618 and up
-8	13300-00		BRACKET ASSEMBLY - Front strap installation	1	
-9	13305-00		CLAMP - Front strap installation	2	
-10	472 682		LINK - Shoulder harness attachment (No. 43B6034) to safety belt, RH	1	(PA-18A only)
-11	472 683		LINK - Shoulder harness attachment (No. 43B6034-1) to safety belt, LH	1	(PA-18A only)
-12	480 929		PLATE - Safety belt attachment (D764 Russel Mfg. Co.)	2	(PA-18 only)
-13	12290-00		CANVAS ASSEMBLY - Front seat, bottom	1	18-1 to 18-5294 inclusive
-14	12839-03		CANVAS ASSEMBLY - Front seat, back	1	18-1 to 18-5294 inclusive
-15	12286-00		CANVAS ASSEMBLY - Rear seat, bottom	1	18-1 to 18-5294 inclusive
-16	12287-00		CANVAS ASSEMBLY - Rear seat, back	1	18-1 to 18-5294 inclusive
-17	180 430		TAPE - Cotton reinforcement (Herring bone weave) 3/8" (used for lacing canvas to seat) (38 feet per ship ship PA-18A)	33'	18-1 to 18-5294 inclusive
-18	12294-00		CUSHION ASSEMBLY - Front seat, bottom, brown	1	18-1 to 18-4617 inclusive
	12294-08	C	CUSHION ASSEMBLY - Front seat, bottom, green	1	
	12294-12		CUSHION ASSEMBLY - Front seat, bottom, red	1	18-3771, 18-3781 to 18-4617 inclusive
	12294-16	B	CUSHION ASSEMBLY - Front seat, bottom, Cadillac red	1	
	12294-24		CUSHION ASSEMBLY - Front seat, bottom, red	1	18-5804, 18-6116 to 18-7609157 inclusive
	12294-28		CUSHION ASSEMBLY - Front seat, bottom, black	1	18-7709001 and up

A - Used on PA-18 airplanes with serial numbers 18-1 to 18-400 inclusive, 18-469 to 18-3013 inclusive.
B - Used on airplanes with serial numbers 18-4618 to 18-5803 inclusive, 18-5805 to 18-6115 inclusive.
C - Used on airplanes with serial numbers 18-3014 to 18-3770 inclusive, 18-3772 to 18-3780 inclusive.

PIPER PARTS CATALOG

Figure and Index Number	Part Number	Code	NOMENCLATURE	No. Req.	SERIAL NUMBERS AFFECTED
11-19	12293-12	A	CUSHION ASSEMBLY - Front seat, back, brown	1	
	12293-19	B	CUSHION ASSEMBLY - Front seat, back, green	1	
	12293-22		CUSHION ASSEMBLY - Front seat, back, red	1	18-3771, 18-3781 to 18-4617 inclusive
	12293-28	G	CUSHION ASSEMBLY - Front seat, back, Cadillac red	1	
	12293-42		CUSHION ASSEMBLY - Front seat, back, red	1	18-5804, 18-6118 to 18-7609157 inclusive
	12293-48		CUSHION ASSEMBLY - Front seat, back, black	1	18-7709001 and up
-20	13614-00	A	* ENVELOPE - Airworthiness certificate, brown	1	
	13614-03	B	* ENVELOPE - Airworthiness certificate, green	1	
	13614-06		* ENVELOPE - Airworthiness certificate, black	1	(PA-18 only) 18-3771, 18-3781 and up
-21	10763-10	A	CUSHION ASSEMBLY - Rear seat, bottom, brown	1	
	10763-16	B	CUSHION ASSEMBLY - Rear seat, bottom, green	1	
	10763-22		CUSHION ASSEMBLY - Rear seat, bottom, red	1	18-3771, 18-3781 to 18-4617 inclusive
	10763-28	G	CUSHION ASSEMBLY - Rear seat, bottom, Cadillac red	1	
	10763-40		CUSHION ASSEMBLY - Rear seat, bottom, red	1	18-5804, 18-6116 to 18-7609157 inclusive
	10763-46		CUSHION ASSEMBLY - Rear seat, bottom, black	1	18-7709001 and up
-22	12289-00	A	CUSHION ASSEMBLY - Rear seat, back, brown	1	(PA-18 only)
	12289-07	A	CUSHION ASSEMBLY - Rear seat, back, brown	1	(PA-18A only)
	12289-09	C	CUSHION ASSEMBLY - Rear seat, back, green	1	
	12289-13	D	CUSHION ASSEMBLY - Rear seat, back, green	1	
	12289-15	E	CUSHION ASSEMBLY - Rear seat, back, red	1	
	12289-19	F	CUSHION ASSEMBLY - Rear seat, back, red	1	
	12289-23	G	CUSHION ASSEMBLY - Rear seat, back, Cadillac red	1	(PA-18A only)
	12289-21	G	CUSHION ASSEMBLY - Rear seat, back, Cadillac red	1	(PA-18 only)
	12289-33		CUSHION ASSEMBLY - Rear seat, back, red	1	(PA-18A only) 18-6118 and up
	12289-37		CUSHION ASSEMBLY - Rear seat, back, red	1	(PA-18 only) 18-5804, 18-6116 to 18-7609157 inclusive
	12289-39		CUSHION ASSEMBLY - Rear seat, back, black	1	18-7709001 and up
-23	12268-11		SEAT BASE ASSEMBLY - Front, "105", "125", "135" and "150"	1	18-1 to 18-7809010 inclusive
	12268-18		SEAT BASE ASSEMBLY - Front "150"	1	18-7809011 and up
	12268-00		SEAT BASE ASSEMBLY - Front, "95"	1	
-24	12079-00		* HANDLE ASSEMBLY - Seat release	1	
-25	12269-00		* ROD - Extension	1	
-26	83302-13		* SPRING - Return (487283)	1	
-27	12914-00		PIN - Stop	1	

A - Used on airplanes with serial numbers 18-1 to 18-4617 inclusive.
B - Used on airplanes with serial numbers 18-3014 to 18-3770 inclusive, 18-3772 to 18-3780 inclusive.
C - Used on PA-18 airplanes with serial numbers 18-3014 to 18-3770 inclusive, 18-3772 to 18-3780 inclusive.
D - Used on PA-18A airplanes with serial numbers 18-3014 to 18-3770 inclusive, 18-3772 to 18-3785 inclusive.
E - Used on PA-18 airplanes with serial numbers 18-3771, 18-3781 to 18-4617 inclusive.
F - Used on PA-18A airplanes with serial numbers 18-3771, 18-3786 to 18-4617 inclusive.
G - Used on airplanes with serial numbers 18-4618 to 18-5803 inclusive, 18-5805 to 18-6115 inclusive.

When ordering, always specify Part Number, Description and Serial Number of Aircraft

Figure and Index Number	Part Number	Code	NOMENCLATURE	No. Req.	SERIAL NUMBERS AFFECTED
11-28	454 888		CLIP - Fastener, front and rear seat attachment (5 per ship PA-18A)	3	
-29	12774-00		LEVER ASSEMBLY - Flap control, "105", "125", "135" and "150"	1	18-1 to 18-7809010 incl.
	12774-02		LEVER ASSEMBLY - Flap control	1	18-7809011 and up
-30	11699-06		PLUNGER - Flap control, "105", "125", "135" and "150"		
-31	11700-00		PAWL - "105", "125", "135" and "150"	1	
-32	50111-00		SPRING - "105", "125", "135" and "150"	1	
-33	11723-00		DECAL - Flap lever, "105", "125", "135" and "150" (456 359)	1	
-34	12776-00		RATCHET - Flap lever, "105", "125", "135" and "150"	1	(PA-18 only)
	14904-00		RATCHET - Flap lever, "125", "135" and "150"	1	(PA-18A only)
-35	80132-10		TUBE - Liner, "105", "125", "135" and "150"	1	
-36	12267-15		SEAT FRAME ASSEMBLY - Front	1	
-37	487 274		SPRING	4	
-38	487 272		SPRING	4	
-39	11420-03		LINK - Spring connector	9	
-40	12244-00		SEAT FRAME ASSEMBLY - Rear back	1	(PA-18 only)
	12244-06		SEAT FRAME ASSEMBLY - Rear back	1	(PA-18A only)
-41	487 274		SPRING	8	
-42	11420-03		LINK - Spring connector	14	
-43	13455-00		TUBE ASSEMBLY - Rear seat back	1	(PA-18A only)
-44	13454-00		SEAT FRAME ASSEMBLY - Rear bottom	1	(PA-18A only)
-45	12286-00		CANVAS ASSEMBLY	1	
-46	13453-00		FRAME ASSEMBLY	1	(PA-18A only)
-47	487 272		SPRING	8	
-48	11420-03		LINK - Spring connector (18 per ship PA-18)	17	
-49	14340-00		WASHER - Shim, flap handle installation	AR	
-50	451 344	A	BELT ASSEMBLY - Safety front and rear (1 per ship PA-18A, rear seat only) (13947-05) (friction buckle)	2	
	451 348		BELT ASSEMBLY - Safety, front and rear (1 per ship PA-18A, rear seat only) (PAC 13947-11) black (friction buckle)	2	
	451 370		BELT ASSEMBLY - Safety, front and rear, gray	2	
	25801-05		BELT ASSEMBLY - Safety, front and rear, black (metal to metal buckle)	2	

A - Used on airplanes with serial numbers 18-3014 to 18-3770 inclusive, 18-3772 to 18-3780 inclusive.

When ordering, always specify Part Number, Description and Serial Number of Aircraft

1 C9

INTENTIONALLY LEFT BLANK

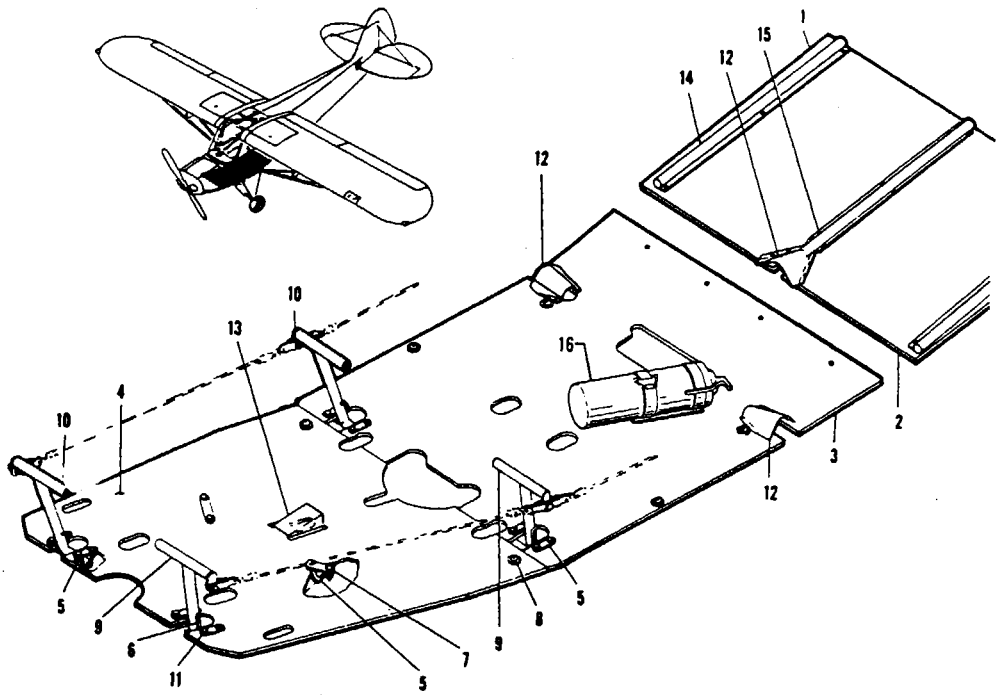

Figure 12. Rudder Pedals and Floorboards Installation

PIPER PARTS CATALOG

Figure and Index Number	Part Number	Code	NOMENCLATURE	No. Req.	SERIAL NUMBERS AFFECTED
12-	10769		DRAWING - Rudder Pedal Installation		
-1	13297-02		FLOORBOARD - Rear, right	1	(PA-18A only)
-2	13297-00		FLOORBOARD - Rear, left (used when electrical equipment is installed)	1	(PA-18A only)
	13297-02		FLOORBOARD - Rear, left (used when electrical equipment is not installed)	1	(PA-18A only)
-3	10799-00		FLOORBOARD ASSEMBLY - Rear	1	(PA-18 only)
	10799-02		FLOORBOARD - Center	1	(PA-18A only)
-4	10737-02	B	FLOORBOARD - Front, “95”, “105” and “125”	1	
	13743-00	A	FLOORBOARD - Front, “135”, “150” and “95”	1	
-5	80222-03		CLAMP	10	
-6	40941-00		SPRING - Rudder pedal	4	
-7	81262-08		LINK	10	
-8	80122-10		WASHER	6	(PA-18 only)
	80122-10		WASHER	21	(PA-18A only)
-9	40842-04	C	PEDAL ASSEMBLY - Rudder, LH	2	
-10	40842-05	C	PEDAL ASSEMBLY - Rudder, RH	2	
-11	85012-04		WASHER	AR	
	85012-05		WASHER	AR	
	85012-06		WASHER	AR	
-12	50042-00		COVER - Pulley housing	2	
	50042-00		COVER - Pulley housing	1	(PA-18A only)
-13	12810-00		COVER - Pulley	1	
-14	12021-02		COVER - Rudder cable	2	(PA-18A only)
-15	13298-00		GUARD - Elevator cable	1	(PA-18A only)
-16	459 848		EXTINGUISHER - Fire (42211-00)	1	

A - Used on PA-18 “95” with serial numbers 18-3771, 18-3781 and up.
B - Used on PA-18 “95” airplanes with serial numbers 18-1 to 18-3770 inclusive, 18-3772 to 18-3780 Inclusive.
C - See latest revision of Piper Service Bulletin 207A for serial numbers 18-1 to 18-7768 inclusive.

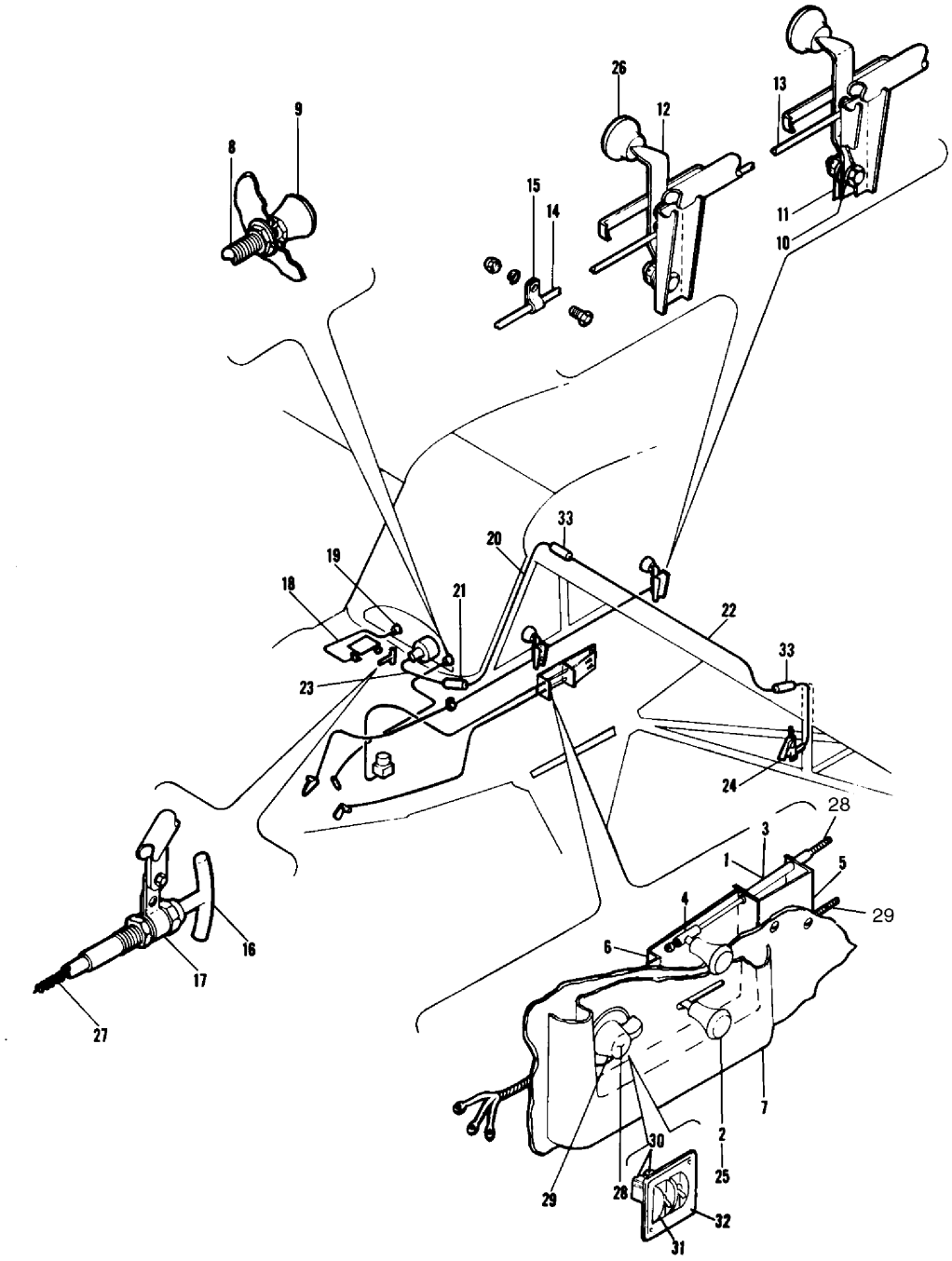

Figure 13. Throttle, Cabin and Carburetor Heat Mixture Controls

PIPER PARTS CATALOG

Figure and Index Number	Part Number	Code	NOMENCLATURE	No. Req.	SERIAL NUMBERS AFFECTED
13-1	12955-00		CABLE ASSEMBLY - Cabin and carburetor heat control	2	18-1 to 18-2190 inclusive
-2	471 052		KNOB	1	18-1 to 18-2190 inclusive
-3	16775-00		CABLE ASSEMBLY - Cabin and carburetor heat control (less knob)	2	18-2191 and up
-4	14056-00		BUSHING - Attachment, cabin and carburetor heat control cable	2	18-2191 and up.
-5	10780-00		BRACKET ASSEMBLY - Front	1	
-6	14055-00		BRACKET - Rear	1	18-2191 and up
-7	10666-03		PANEL ASSEMBLY - Ignition switch, carburetor and cabin heat	1	18-1 to 18-2190 inclusive
	10666-06		PANEL ASSEMBLY - Ignition switch, carburetor and cabin heat	1	18-2191 and up
-8	16775-00		CABLE ASSEMBLY - Mixture control (less knob)	1	18-001 to 18-2167
	16775-06		CABLE ASSEMBLY - Less knob	1	18-2168 and up
-9	471 053		KNOB - Mixture control (3004-S-M) pastel red	1	
-10	81342-20		WASHER - Throttle, vellumoid friction	4	
-11	81172-20		LUG - Friction (steel at throttle assembly)	2	
-12	41491-00		LEVER - Throttle control	2	
-13	41551-00		LINK - Throttle lever connector	1	
-14	12694-00		CABLE ASSEMBLY - Throttle control (used when electrical equipment is not installed) “95”	1	
	12694-02		CABLE ASSEMBLY - Throttle control (used when electrical equipment is installed) “95”	1	
	12694-03		CABLE ASSEMBLY - Throttle control (Lycoming engine) “150”, “125”, “135” and “150”	1	
-15	80032 -51		CLAMP - Throttle control	1	
-16	12722-00		CABLE ASSEMBLY - Starter control (when electrical equipment is installed) “95”	1	
-17	12307-00		CLAMP - Starter control (when electrical equipment is installed) “95”	1	18-001 to 18-2167
-18	16775-00		CABLE ASSEMBLY - Cold air vent control (less knob) PA-18-135 and 150	1	18-2168 and up
	16775-006		CABLE ASSEMBLY - Less knob	1	18-2168 and up
-19	471 052		KNOB - Cold air vent, ivory	1	
	471 060		KNOB - Cold air vent, black	1	
-20	10554-00		TUBE ASSEMBLY - Airspeed, wing to tube at instrument (1 per ship PA-18, “95”, “105” and “125” and PA-18A, “125”) (2 per ship PA-18 and PA-18A, “135”)	1	
	61323-10		TUBING - Airspeed “150”	2	
-21	83161-02		HOSE - Airspeed, rubber	1	
-22	13541-02		TUBING - Airspeed, left wing, “95”, “105” and “125”	1	
	13541-16		TUBING - Airspeed, left wing, “135” and “150”	2	
-23	13541-04		TUBE - Airspeed inciator (1 per ship PA-18, “95”, “105”, “125” and PA-18A, “125”) (2 per ship PA-18 and PA-18A “135” and “150”)	1	
-24	13764-00		TUBE ASSEMBLY - Airspeed (pitot and static) “135” and “ 150”	1	
-25	471 052		KNOB - Cabin and carburetor heat control	2	
-26	18875-07		KNOB - Throttle lever, black	2	
-27	487 276		SPRING - Starter control (C 90-12F engine only)	2	

When ordering, always specify Part Number, Description, and Serial Number of Aircraft

PIPER PARTS CATALOG

Figure and Index Number	Part Number	Code	NOMENCLATURE	No. Req.	SERIAL NUMBERS AFFECTED
13-28	12400-00		SWITCH ASSEMBLY - Ignition, with wires (shielded)	1	18-1 to 18-4308 inclusive
	14579-02		SWITCH ASSEMBLY - Ignition, with wires (shielded)	1	18-4309 to 18-8914 inclusive
	83952-02		SWITCH ASSEMBLY - Ignition, with wires (unshielded)	1	18-1 to 18-8914 inclusive
	15302-02		SWITCH ASSEMBLY - Ignition, with wires (shielded)	1	18-8915 to 18-7909015 incl.
	15302-04		SWITCH ASSEMBLY - Ignition, with wires (unshielded)	1	18-8915 and up
	15302-05		SWITCH ASSEMBLY - Ignition, with wires (shielded)	1	18-7909016 and up
-29	487 774		SWITCH - Ignition	1	18-1 to 18-8914 inclusive
-30	487 823		SWITCH - Ignition (#110-S-67)	2	18-8915 and up
-31	15300-00		GUARD - Switch	2	18-8915 and up
-32	15299-00		PANEL - Magneto switches	1	18-8915 and up
-33	83161-02		HOSE - Airspeed, rubber (4 per ship, "135" and "150")	2	

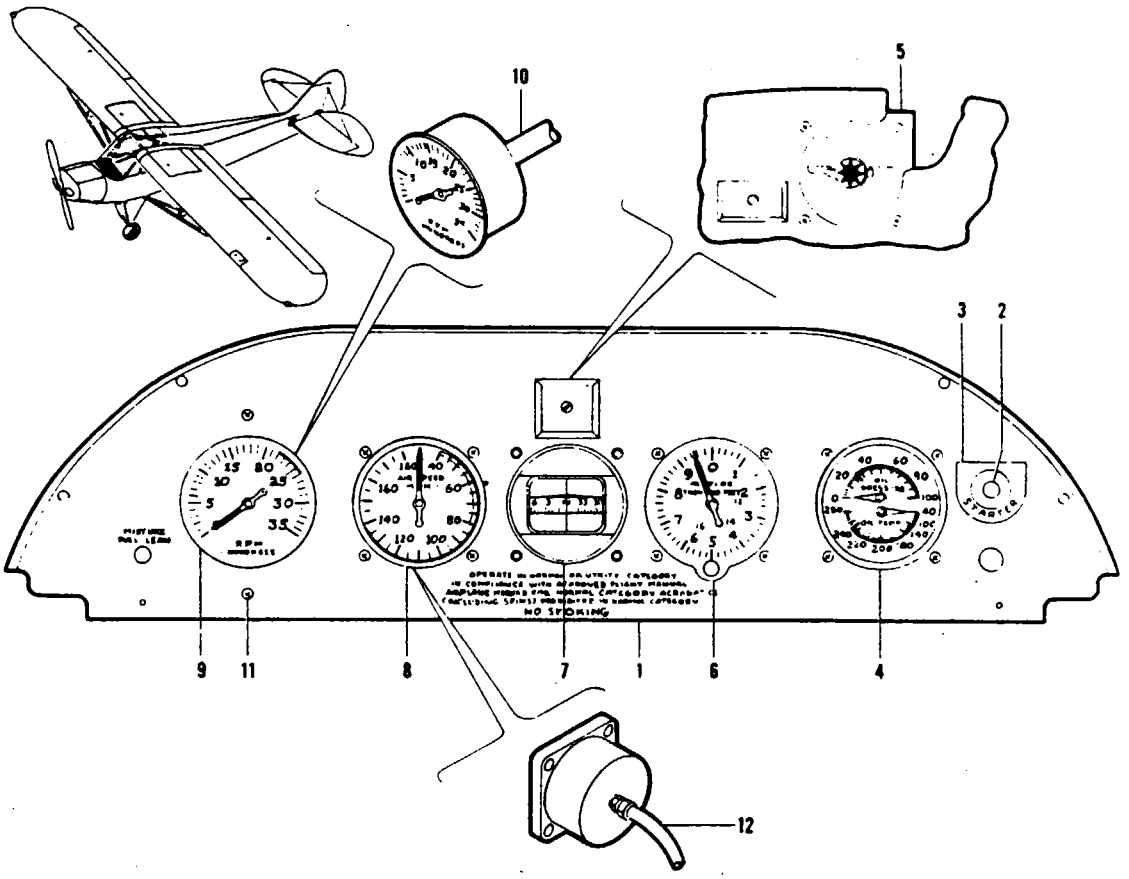

Figure 14. Instrument Panels Installation, Standard

Note: All instruments called out in this Parts List are blackfaced and are the only type being supplied as Service replacements for this aircraft. The compass is the small type and is the only compass which will be supplied for Service replacement. A mounting plate will be supplied with each compass to be used when installing in aircraft in which the original compass was the large type. The oil temperature and pressure gauge being supplied is the 4-hole mounting type. A mounting plate will be supplied with this gauge for use when installing in aircraft in which the original gauge was the 2-hole mounting type. All instrument mounting holes contained in the standard instrument panels will be the same size. Adapter plates and bushings will be supplied with each panel for mounting the various sized instruments used.

PIPER PARTS CATALOG

Figure and Index Number	Part Number	Code	NOMENCLATURE	No. Req.	SERIAL NUMBERS AFFECTED
14-	13426	C	DRAWING - Instrument Panel Assembly, "95", "105" and "125"		
	13688		DRAWING - Instrument Panel Assembly, "135"		(PA-18 only)
	13689		DRAWING - Instrument Panel Assembly, "125", "135" and "150"		(PA-18A only)
	13687		DRAWING - Instrument Panel Assembly, "95"		(PA-18 only) 18-3771, 18-3781 and up
	13688		DRAWING - Instrument Panel Assembly, "150"		(PA-18 only) 18-3771, 18-3781 to 18-8020 inclusive
	15250		DRAWING - Instrument Panel Assembly, "150"		(PA-18 only) 18-8021 and up
-1	13427-02	C	PANEL ASSEMBLY - Instrument, "95"	1	
	13428-02		PANEL ASSEMBLY - Instrument, "105", "125" and "135"	1	(PA-18 only) 18-1 to 18-2167 inclusive
	13685-02		PANEL ASSEMBLY - Instrument, "135" and "150"	1	(PA-18 only) 18-2168 to 18-8020 inclusive
	15249-00		PANEL ASSEMBLY - Instrument, "150"	1	(PA-18 only) 18-8021 and up
	13686-02		PANEL ASSEMBLY - Instrument, "135" and "150"	1	(PA-18A only) 18-2168 and up
	13309-02	A	PANEL - Instrument	1	
	13684-00	B	PANEL - Instrument, "95"	1	
-2	487 527		SWITCH - Starter (1875-0) (R.B.M. Co.) (used when electrical equipment is installed) "105", "125", "135" and "150"	1	
	487 550		SWITCH - Starter (#9011) heavy duty (used when electrical system is installed) "150"	1	
-3	11015-00		PLACARD - Starter button, "105", "125", "135" and "150"	1	
	81342-45		WASHER - Starter button hole cover (used when electrical system is not installed)	2	
-4	450 680		INSTRUMENT - Oil temperature and pressure (PAC No. 13416-2) "105", "125", "135" and "150"	1	
	450 681		INSTRUMENT - Oil temperature and pressure (PAC No. 13416-3) "95"	1	
-5	11199-00		PLATE - Cover (3-3/16" x 3-3/16")	2	
	11199-08		PLATE - Cover (2-5/8" x 2-5/8")	1	
-6	450 611		INSTRUMENT - Altimeter (PAC No. 11343) (Standard)	1	
	450 694		INSTRUMENT - Altimeter sensitive (Scale in inches of Mercury)	1	
	450 791	D	INSTRUMENT - Altimeter, Sensitive (Scale in Millibars)	1	
	548 330		INSTRUMENT - Altimeter, Sensitive (Scale in inches of Mercury and Millibars)	1	
-7	450 628		INSTRUMENT - Compass (No. C-2300 airpath)	1	

A - Used on PA-18A airplanes with serial numbers 18-1262 to 18-2167 inclusive.
B - Used on PA-18 airplanes with serial numbers 18-3771, 18-3781 and up.
C - Used on PA-18 airplanes with serial numbers 18-1 to 18-3770 inclusive, 18-3772 to 18-3780 inclusive.
D - Optional Equipment.

When ordering, always specify Part Number, Description and Serial Number of Aircraft

Figure and Index Number	Part Number	Code	NOMENCLATURE	No. Req.	SERIAL NUMBERS AFFECTED
14-8	450 676		INSTRUMENT - Airspeed (PAC No. 11339-3) "95"	1	
	450 677		INSTRUMENT - Airspeed (PAC No. 11339-4) "105" and "125"	1	
	450 687		INSTRUMENT - Airspeed indicator (PAC No. 11339-06) "135"	1	18-1215 to 18-4617 inclusive
	11339-06		INSTRUMENT - Airspeed (used when 89-2000 floats installed) "150"	1	18-3771, 18-3781 and up
	450 699		INSTRUMENT - Airspeed indicator (PAC No. 11339-10) "150"	1	18-3771, 18-3781 and up
-9	450 643		INSTRUMENT - Tachometer, recording (PAC No. 13621-00) "105", "125" and "135"	1	18-1 to 18-4617 inclusive
	450 685		INSTRUMENT - Tachometer, recording (used with C-90-8F engine) (PAC No. 13690) "95"	1	
	13621-02		INSTRUMENT - Tachometer, recording (used with C-90-12F engine) "95"	1	
	450 679	A	INSTRUMENT - Tachometer - Non-recording (used with C-90-12F engine) (PAC No. 11342-3) "95"	1	
	450 683	A	INSTRUMENT - Tachometer, standard, non-recording (used with C-90-8F engine)	1	
	450 642		INSTRUMENT - Tachometer, standard, non-recording (PAC No. 11342) "105" and "125"	1	
	450 646		INSTRUMENT - Tachometer, recording (PAC No. 13621-04) "150"	1	
-10	486 570		SHAFT - Tachometer (1536463) 32-1/2 (used with recording tachometer) "95", "105", "125" and "135"	1	18-1 to 18-4617 inclusive
	486 565		SHAFT - Tachometer (No. 63600) (Used with standard, non-recording tachometer)	1	18-1 to 18-1969 inclusive
	750 907		CASING ASSEMBLY - (Used with standard, non-recording tachometer)	1	18-1 to 18-1969 inclusive
	486 574		SHAFT - Tachometer (1568857) 25" long, "150"	1	
-11	82732-03		BUSHING - Instrument installation	AR	
-12	13541-04		TUBE - Airspeed (1 per ship model "95", "105" and "125") (2 per ship model "135" and "150)		

A - Used on PA-18 airplanes with serial numbers 18-1 to 18-3770 inclusive and 18-3772 to 18-3780 inclusive.

1 C18

INTENTIONALLY LEFT BLANK

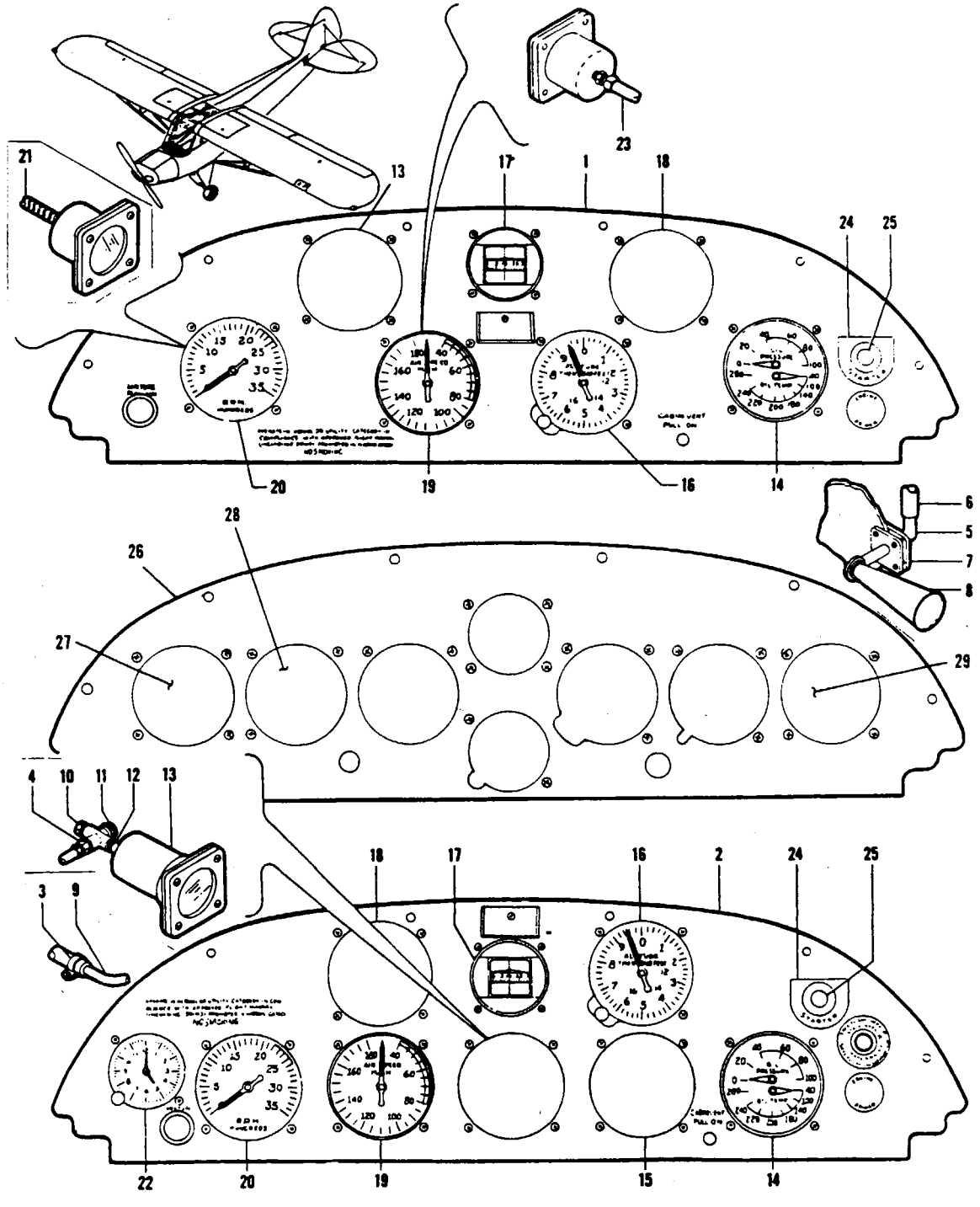

Figure 15. Instrument Panels Installation
Advanced and Primary

Figure and Index Number	Part Number	Code	NOMENCLATURE	No. Req.	SERIAL NUMBERS AFFECTED
15-	13700		DRAWING - Instrument Panel Assembly, Primary "105", "125", "135" and "150"		(PA-18 only) 18-1 to 18-8033 inclusive
	15261		DRAWING - Instrument Panel Assembly, Primary "150"		(PA-18 only) 18-8034 and up
	13698	B	DRAWING - Instrument Panel Assembly, Advanced "105", "125" and "135"		
	14745		DRAWING - Instrument Panel Assembly, Primary "95"		(PA-18 only) 18-4618 and up
	14723		DRAWING - Venturi Tube Installation		18-4618 and up
1	13801-00		PANEL ASSEMBLY - Instrument, primary "105", "125" and "135"	1	(PA-18 only) 18-1 to 18-2167 inclusive
	13699-02		PANEL ASSEMBLY - Instrument, primary "135" and "150"	1	(PA-18 only) 18-2168 to 18-8033 inclusive
	15249-00		PANEL ASSEMBLY - Instrument, primary "150"	1	(PA-18 only) 18-8034 and up
-2	13800-00		PANEL - Instrument, advanced "105", "125" and "135"	1	(PA-18 only) 18-1 to 18-2167 inclusive
	13697-02		PANEL ASSEMBLY - Instrument, advanced, "135"	1	(PA-18 only) 18-2168 and up
-3	554 778		CLAMP - GS4SS Type "F"	1	
-4	460 685		CONNECTOR - Inverted male (W/H No. 200 x 4) "105", "125" and "135"	1	(PA-18 only) 18-1 to 18-3483 inclusive
-5	458 903		ELBOW - At venturi (AN842-4) "105", "125" and "135"	1	(PA-18 only) 18-1 to 18-3483 inclusive
	451 857	A	ADAPTER - (AN840-4D) at venturi "105", "125", "135" and "150"	1	
	11987-25		TUBE - Connection at venturi	1	18-4618 to 18-7887 inclusive
	460 649		CONNECTOR - At venturi (W/H 234 x 4)	1	18-4618 to 18-7887 inclusive
	451 940		ADAPTER - At venturi (1K10-4-4)	1	18-7888 and up
-6	82371-06		HOSE - "105", "125" and "135"	1	(PA-18 only) 18-1 to 18-3483 inclusive
	82371-26		HOSE - Connecting, venturi	1	(PA-18 only) 18-3484 and up
-7	12876-00		PLATE - Venturi mounting "105", "125", "135" and "150"	1	(PA-18 only) 18-1 to 18-4617 inclusive
	13160-02		PLATE - Venturi mounting	1	18-4618 to 18-7887 inclusive
	13160-03		PLATE - Venturi mounting	1	18-7888 and up
-8	489 639		VENTURI - 4"	1	(PA-18 only)
-9	11987-43		TUBE ASSEMBLY - "105", "125" and "135"	1	(PA-18 only) 18-1 to 18-3483 inclusive
-10	460 669		PLUG - Suction valve (W/H 3152 x 2) "105", "125" and "135"	1	(PA-18 only) 18-1 to 18-3483 inclusive
	14205-00		VALVE - Air regulating	1	(PA-18 only) 18-3484 and up
-11	492 024		VALVE - Suction regulating (AN No. 5829-2) "105", "125" and "135"	1	(PA-18 only) 18-1 to 18-3483 inclusive
-12	460 680		NIPPLE - (W/H No. 3327 x 2) "105", "125" and "135"	1	(PA-18 only) 18-1 to 18-3483 inclusive

A - PA-18 only, serial numbers 18-3484 to 18-4617 inclusive.
B - PA-18 only, serial numbers 18-1 to 18-3770 inclusive, and 18-3772 to 18-3780 inclusive.

PIPER PARTS CATALOG

Figure and Index Number	Part Number	Code	NOMENCLATURE	No. Req.	SERIAL NUMBERS AFFECTED
15-13	450 658		INSTRUMENT - Turn and bank indicator	1	(PA-18 only)
-14	450 680		INSTRUMENT - Oil temperature and pressure (PAC No. 13416-02) "105", "125", "135" and "150"	1	(PA-18 only)
-15	751 118	A	INSTRUMENT - Manifold pressure, "105", "125" and "135"	1	
-16	450 694		INSTRUMENT - Altimeter (sensitive)	1	
-17	450 628		INSTRUMENT - Compass (No. C-2300)	1	
-18	550 684		INSTRUMENT - Rate of climb (0-4000 ft/min.)	1	
-19	450 677		INSTRUMENT - Airspeed indicator (PAC No. 11339-04) "105" and "125"	1	
	450 687		INSTRUMENT - Airspeed indicator (PAC No. 11339-06) "135"	1	
	450 699		INSTRUMENT - Airspeed indicator (PAC No. 11339-10) "150"	1	
-20	450 643		INSTRUMENT - Tachometer, recording (PAC No. 13621-00) "105", "125" and "135"	1	
	450 646		INSTRUMENT - Tachometer, recording (PAC No. 13621-04) "150"	1	
-21	486 570		SHAFT - Tachometer, recording, 32-1/2", "95", "105", "125" and "135"	1	
	486 574		SHAFT - Tachometer, recording, 25" long, "150"	1	
-22	450 706		INSTRUMENT - Clock	1	
-23	13541-04		TUBE - Airspeed (1 per ship models "95", "105" and "125") (2 per ship models "135" "150")		
-24	11015-00		PLACARD - Starter button, "105", "125", "135" and "150"	1	
	81342-45		WASHER - Starter button hole cover (used when electrical system not installed) "105", "125" "135" and "150"	2	
-25	487 527		SWITCH - (1875-0) (R.B.M. Co.) (used when electrical system is installed) "105", "125", "135", "150"	1	
	487 550		SWITCH - Starter (#9011) heavy duty	1	
-26	14744-00		PANEL - Instrument, primary, "95"	1	(PA-18 only) 18-4618 and up
-27	13621-02		INSTRUMENT - Tachometer (used with C90-12F engine) "95"	1	
	13690-00		INSTRUMENT - Tachometer (used with C90-8F engine) "95"	1	
-28	11339-03		INSTRUMENT - Airspeed indicator, "95"	1	
-29	13416-03		INSTRUMENT - Oil temperature and pressure	1	

A - PA-18 only, serial numbers 18-1 to 18-3770 inclusive, and 18-3772 to 18-3780 inclusive.

When ordering, always specify Part Number, Description and Serial Number of Aircraft

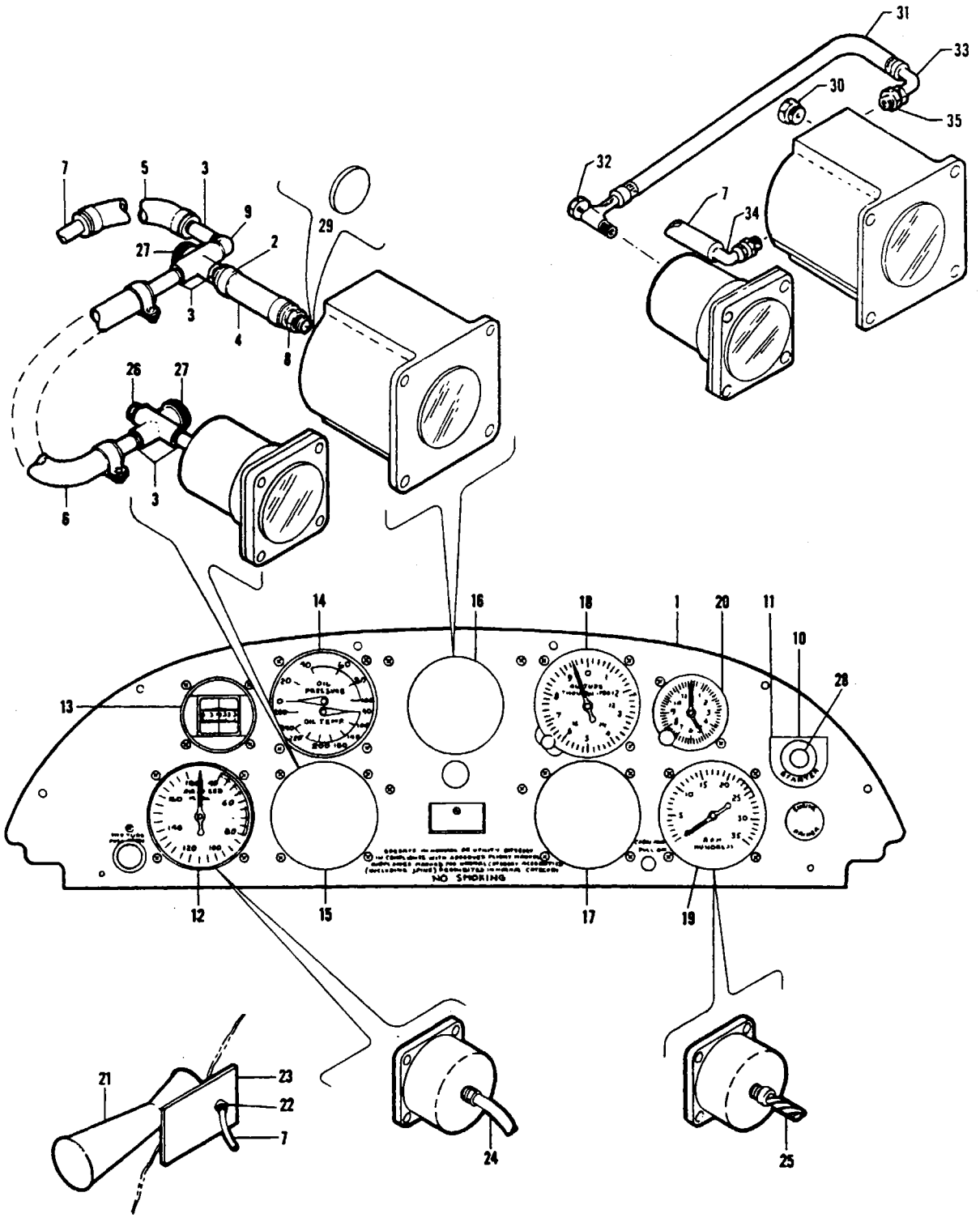

Figure 16. Instrument Panels Installation, Gyro
(Serial Nos. 18-1 to 18-8019 inclusive)

PIPER PARTS CATALOG

Figure and Index Number	Part Number	Code	NOMENCLATURE	No. Req.	SERIAL NUMBERS AFFECTED
			NOTE: See instrument note on Figure 14 illustration before ordering instruments listed in this section.		
16-	13701		DRAWING - Instrument Panel Assembly, "105", "125", "135" and "150"		
-1	13368-00		PANEL ASSEMBLY - Instrument gyro, "105", "125" and "135"	1	(PA-18 only) 18-1 to 18-2167 inclusive
	13368-02		PANEL ASSEMBLY - Instrument, gyro, "135" and "150"	1	(PA-18 only) 18-2168 to 18-8019 inclusive
-2	554 871		CLAMP - GS6SS Type "F"	6	18-1 to 18-7887 inclusive
-3	460 680		NIPPLE - (W/H 3327 x 2)	5	18-1 to 18-7887 inclusive
-4	82371-15		HOSE - Gyro installation	1	18-1 to 18-7887 inclusive
-5	82371-10		HOSE - Gyro installation	1	18-1 to 18-7887 inclusive
-6	82371-22		HOSE - Turn and bank installation	1	18-1 to 18-7887 inclusive
-7	11987-15		TUBE ASSEMBLY - To Venturi (15-1/4")	1	18-1 to 18-7887 inclusive
	82371-33		HOSE - Flexible, to Venturi (18") "150"	1	18-7888 to 18-8019 inclusive
-8	476 652		ADAPTER - Gyro (AN840-6D)	1	18-1 to 18-7887 inclusive
-9	458 920		ELBOW - (W/H 3400 x 2)	1	18-1 to 18-7887 inclusive
-10	81342-45		WASHER - Starter button hole cover (used when electrical system is not installed)	2	
-11	11015-00		PLACARD - Starter button	1	
-12	450 687		INSTRUMENT - Airspeed indicator (PAC No. 11339-06) "135"	1	
	450 677		INSTRUMENT - Airspeed indicator (PAC No. 11339-04) "105" and "125"	1	
	450 699		INSTRUMENT - Airspeed indicator (PAC No. 11339-10) "150"	1	
	450 687	B	INSTRUMENT - Airspeed indicator (PAC No. 11339-06) "150"	1	
-13	450 628		INSTRUMENT - Compass (No. C-2300)	1	
-14	450 680		INSTRUMENT - Oil temperature and pressure (PAC No. 13416-02)	1	
-15	460 658		INSTRUMENT - Turn and bank	1	
-16	450 635		INSTRUMENT - Directional gyro	1	
-17	450 687	B	INSTRUMENT - Rate of climb (0-4000 ft/min.)	1	
-18	450 694		INSTRUMENT - Altimeter, sensitive	1	
-19	450 643	A	INSTRUMENT - Tachometer, recording (PAC No. 13621-00)	1	
	450 646		INSTRUMENT - Tachometer, recording (PAC No. 13621-04) "150"	1	
-20	450 706		INSTRUMENT - Clock	1	
-21	489 639		TUBE - Venturi, 4"	1	
-22	460 659		ELBOW - Inverted (W/H 352 x 6)	1	18-1 to 18-7887 inclusive
	451 939		ADAPTER - (1K10-4-6) "150"	1	18-7888 to 18-8019 inclusive
-23	13160-02		PLATE - Venturi mounting	1	18-1 to 18-7887 inclusive
	13160-03		PLATE - Venturi mounting	1	18-7888 to 18-8019 inclusive
-24	13541-04		TUBE - Airspeed indicator (1 per ship Model "105" and "125") (2 per ship Model "135" and "150")		
-25	486 570	A	SHAFT - Tachometer, recording, 32-1/2"	1	
	486 574		SHAFT - Tachometer, recording, 25" long, "150"	1	

A - Used on PA-18 airplanes "105", "125" and "135".
B - Used if Model 89-2000 floats are installed.

Figure and Index Number	Part Number	Code	NOMENCLATURE	No. Req.	SERIAL NUMBERS AFFECTED
16-26	460 669		PLUG - Suction valve (W/H 3152 x 2)	1	18-1 to 18-7887 inclusive
-27	492 024		VALVE - Suction regulating (AN5829-2)	2	18-1 to 18-7887 inclusive
-28	487 527		SWITCH - Starter (1875-0) (R.B.M. Co.) (used when electrical equipment is installed)	1	
-29	755 824		PAD - Standard instrument filter (2 per instrument)	AR	
-30	15232-00		PLUG - "150"	1	18-7888 to 18-8019 inclusive
-31	82371-94		HOSE - "150"	1	18-7888 to 18-8019 inclusive
-32	14205-00		VALVE ASSEMBLY - "150"	1	18-7888 to 18-8019 inclusive
-33	458 948		ELBOW - (#1K1-2-4) "150"	1	18-7888 to 18-8019 inclusive
-34	458 945		ELBOW - (#1K1-4-6) "150"	1	18-7888 to 18-8019 inclusive
-35	453 680		BUSHING - Reducer (AN912-1C) "150"	1	18-7888 to 18-8019 inclusive

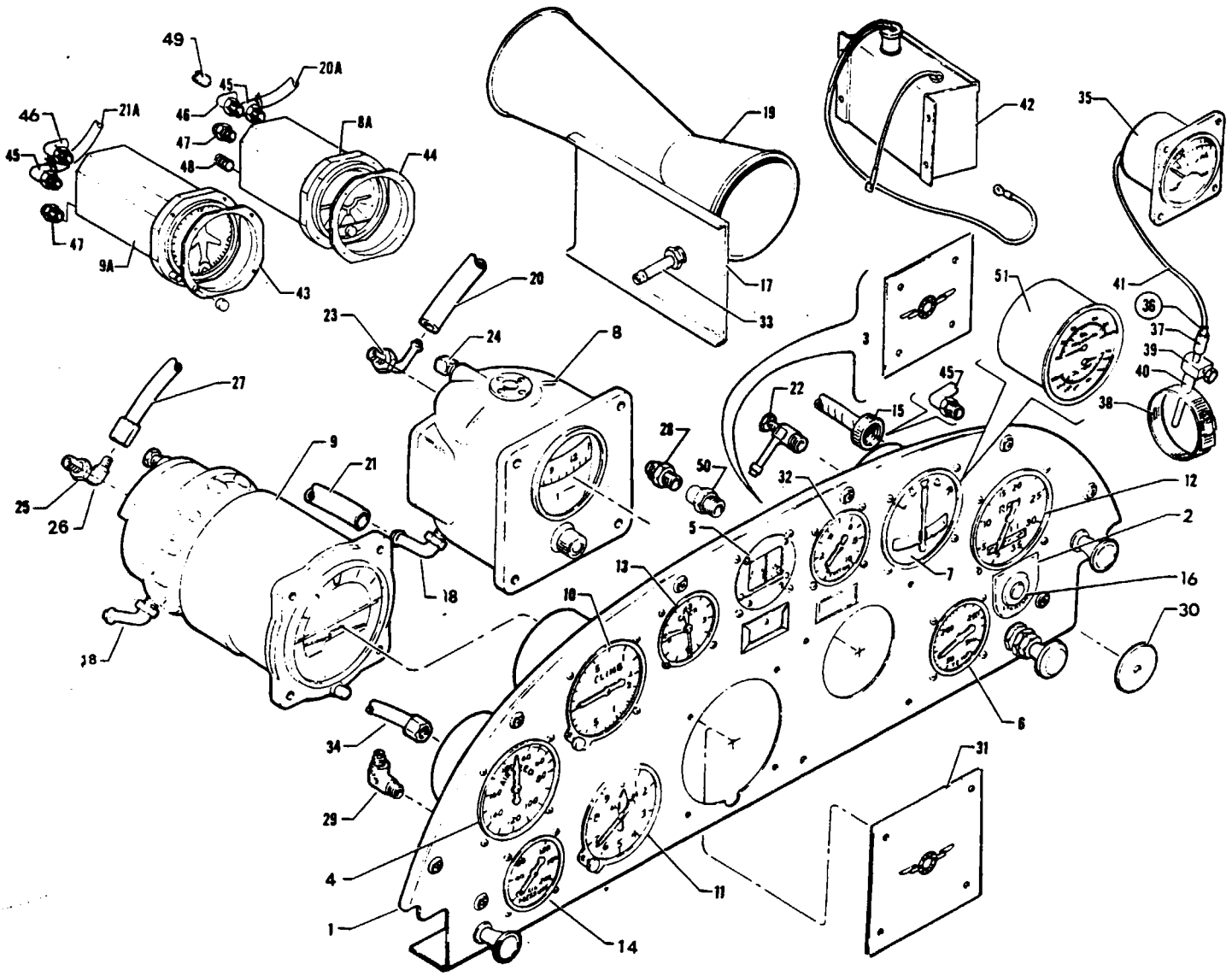

Figure 16A. Instrument Panel Installation, Gyro
(Serial Nos. 18-8020 and up)

PIPER PARTS CATALOG

Figure and Index Number	Part Number	Code	NOMENCLATURE	No. Req.	SERIAL NUMBERS AFFECTED
16A-	15246	D	DRAWING - Instrument Panel Installation, Full Gyro		18-8020 to 18-7609012 incl.
	15788	D	DRAWING - Instrument Panel Installation, Full Gyro		18-7609013 and up
	15260	C	DRAWING - Instrument Panel Installation, Gyro		18-8020 to 18-7809079 incl.
	60729	E	DRAWING - Instrument Panel Installation, Gyro		18-7809080 and up
	60730	F	DRAWING - Instrument Panel Installation, Gyro		18-7809080 and up
	60732	G	DRAWING - Instrument Panel Installation, Gyro		18-7809080 and up
	60733	J	DRAWING - Instrument Panel Installation, Gyro		18-7809080 and up
	60734	C	DRAWING - Instrument Panel Installation, Gyro		18-7809080 and up
	60735	H	DRAWING - Instrument Panel Installation, Gyro		18-7809080 and up
-1	14844-04	C	PANEL ASSEMBLY - Instrument, gyro	1	18-8020 to 18-7809079 incl.
	14844-04	D	PANEL ASSEMBLY - Instrument, full gyro	1	18-8020 to 18-7609012 incl.
	14844-06	D	PANEL ASSEMBLY - Instrument, full gyro	1	18-7609013 to 18-7809079 incl.
	14844-06		PANEL ASSEMBLY - Instrument, gyro	1	18-7809080 and up
-2	11015-00	A	PLACARD - Starter button	1	
-3	11199-08		PLATE - Cover	1	18-8020 to 18-7809079 incl.
-4	450 699		INSTRUMENT - Airspeed indicator (11339-10)	1	
	450 687	K	INSTRUMENT - Airspeed indicator (11339-06)	1	
-5	450 628		INSTRUMENT - Compass (C-2300)	1	
-6	15259-00	L	INSTRUMENT - Oil temperature	1	
-7	450 658	C	INSTRUMENT - Turn and Bank	1	18-8020 to 18-7809079 incl.
	450 658	D	INSTRUMENT - Turn and Bank	1	18-8020 to 18-7609012 incl.
	548 314	D	INSTRUMENT - Turn and Bank (Bendix 1721 or 1722)	1	18-7609013 to 18-7809079 incl.
	548 314	L	INSTRUMENT - Turn and Bank (Bendix 1721 or 1722)	1	18-7809080 and up
	548 447	L	INSTRUMENT - Turn and Bank (R.C. Allen AZ475-2)	1	18-7809080 and up
	548 455	L	INSTRUMENT - Turn and Bank (R.C. Allen 28W2-A2A)	1	18-7809080 and up
-8	550 647	C	INSTRUMENT - Directional gyro	1	18-8020 to 18-7809079 incl.
	550 647	D	INSTRUMENT - Directional gyro	1	18-8020 to 18-7609012 incl.
-8a	548 456	D	INSTRUMENT - Attitude gyro (Aeritalia/code 8.148.019)	1	18-7609013 to 18-7809079 incl.
	548 457	D	INSTRUMENT - Attitude gyro (Aviation Instruments/ AIM 500-1A6)	1	18-7609013 to 18-7809079 incl.
	548 459	D	INSTRUMENT - Attitude gyro (R.C.Allen/A.I.D.)	1	18-7609013 to 18-7809079 incl.
	548 461	D	INSTRUMENT - Attitude gyro (EDO-Aire)	1	18-7609013 to 18-7809079 incl.
	548 463	D	INSTRUMENT - Attitude gyro (Aviation Instruments/ 700-4CF(6))	1	18-7609013 to 18-7809079 incl.
	548 465	D	INSTRUMENT - Attitude gyro (Aeritalia/code 8.148.056)	1	18-7609013 to 18-7809079 incl.
	548 456	L	INSTRUMENT - Attitude gyro (Aeritalia/code 8.148.019)	1	18-7809080 and up
	548 457	L	INSTRUMENT - Attitude gyro (Aviation Instruments/ AIM 500-1A6)	1	18-7809080 and up

A - Used when electrical system is installed.
B - Used when vacuum system is not installed.
C - Used if Directional Gyro and Turn and Bank indicator only are installed.
D - Used if Directional Gyro, Attitude Gyro and Turn and Bank Indicator are installed.
E - Used if Turn and Bank indicator only is installed.
F - Used if Directional Gyro only is installed.
G - Used if Attitude Gyro only is installed.
H - Used if Attitude Gyro and Turn and Bank indicator only are installed.
J - Used if Directional Gyro and Attitude Gyro only are installed.
K - Used if Model 89-2000 floats are installed.
L - Not used on PA-18-150 with serial numbers 18-8209001 to 18-8309025 inclusive.

PIPER PARTS CATALOG

Figure and Index Number	Part Number	Code	NOMENCLATURE	No. Req.	SERIAL NUMBERS AFFECTED
16A-8a	548 459	F	INSTRUMENT - Attitude gyro (R.C. Allen/A.I.D.)	1	18-7809080 and up
	548 461	F	INSTRUMENT - Attitude gyro (EDO-Aire)	1	18-7809080 and up
	548 463	F	INSTRUMENT - Attitude gyro (Aviation Instruments/ 700-4CF(6))	1	18-7809080 and up
	548 465	F	INSTRUMENT - Attitude gyro (Aeritalia/code 8.148.056)	1	18-7809080 and up
-9	550 646		INSTRUMENT - Attitude gyro	1	18-8020 to 18-7609012 inclusive
-9a	755 427	C	INSTRUMENT - Directional gyro (R.C.Allen/A.I.D., EDO-Aire or Aviation Instruments)	1	18-760913 to 18-7809097 incl.
	755 427	F	INSTRUMENT - Directional gyro (R.C.Allen/A.I.D., EDO-Aire or Aviation Instruments)	1	18-7809080 and up
	548 321	F	INSTRUMENT - Directional gyro (Aeritalia/code 8.143.015)	1	18-7809080 and up
	548 322	F	INSTRUMENT - Directional gyro (Aeritalia/code 8.148.051)	1	18-7809080 and up
	548 437	F	INSTRUMENT - Directional gyro (Aerosonic)	1	18-7809080 and up
-10	550 684	F	INSTRUMENT - Rate of climb (0-4000 ft/min.)	1	
-11	550 493		INSTRUMENT - Altimeter, sensitive (scale in inches of mercury)	1	
	550 491		INSTRUMENT - Altimeter, sensitive (scale in millibars)	1	
	548 330	F	INSTRUMENT - Altimeter sensitive (scale in inches of mercury and millibars)	1	
-12	450 646		INSTRUMENT - Tachometer (13621-04)	1	
-13	450 706	B	INSTRUMENT - Clock	1	18-8020 to 18-7809079 incl.
	99478-00	C	INSTRUMENT - Clock	1	18-7609013 to 18-7809079 incl.
	99478-00	F	INSTRUMENT - Clock	1	18-7809080 and up
-14	14882-00	F	INSTRUMENT - Oil pressure gauge	1	
-15	42800-04		SHAFT - Tachometer, 25" L	1	
-16	487 527	E	SWITCH - Starter (1875-0)	1	
	487 550	E	SWITCH - Starter (9011) Heavy duty	1	
-17	13160-03	A	PLATE - Venturi mounting	1	
-18	458 945		ELBOW - (1K1-4-6)	2	18-8020 to 18-7609012 inclusive
-19	498 639	A	TUBE - Venturi, 4"	1	
-20	82371-95	B	HOSE - Turn and bank to directional gyro	1	18-8020 to 18-7809079 inclusive
	82371-95	C	HOSE - Turn and bank to directional gyro	1	18-8020 to 18-7609012 inclusive
-20a	82371-39	C	HOSE - Attitude gyro to turn and bank	1	18-7609013 to 18-7609065 incl.
	16633-62	C	HOSE - Attitude gyro to turn and bank	1	18-7609066 to 18-7809079 incl.
	16633-62	D,F	HOSE - Attitude gyro to turn and bank	1	18-7809080 and up
	16633-62	A,F	HOSE - Attitude gyro to suction gauge	1	18-7809080 and up
-21	82371-60	A,B	HOSE - Directional gyro to venturi	1	18-8020 to 18-7809079 inclusive
	82371-60	A,C	HOSE - Directional gyro to venturi	1	18-8020 to 18-7609012 inclusive

A - Used when vacuum system is not installed.
B - Used if Directional Gyro and Turn and Bank Indicator only are installed.
C - Used if Directional Gyro, Attitude Gyro and Turn and Bank Indicator are installed.
D - Used if Attitude Gyro and Turn and Bank Indicator only are installed.
E - Used when electrical system is installed.
F - Not used on PA-18-150 with serial numbers 18-8209001 to 18-8309025 inclusive.

When ordering, always specify Part Number, Description and Serial Number of Aircraft

PIPER PARTS CATALOG

Figure and Index Number	Part Number	Code	NOMENCLATURE	No. Req.	SERIAL NUMBERS AFFECTED
16A-21a	82371-74	D	HOSE - Directional gyro to suction gauge	1	18-7609013 to 18-7609065 incl.
	80007-38	D	HOSE - Directional gyro to suction gauge	1	18-7609066 to 18-7809079 incl.
	80007-38	M	HOSE - Directional gyro to suction gauge	1	18-7809080 and up
-22	14205-00	D,E,F,M	VALVE ASSEMBLY	1	
	458 948	L,M	ELBOW - (1K1-2-4)	1	
-23	558 904	E	ELBOW - (1K1-4-4)	1	18-8020 to 18-7809079 inclusive
	558 904	D	ELBOW - (1K1-4-4)	1	18-8020 to 18-7609012 inclusive
-24	15232-00	E	PLUG - Directional gyro air	1	18-8020 to 18-7809079 inclusive
-25	480 937		PLUG - Attitude Gyro (W/H 3152 x 4)	1	18-8020 to 18-7609012 inclusive
	24712-00		PLUG - Attitude gyro	1	18-8020 to 18-7609012 inclusive
	453 616	G	BUSHING - Attitude Gyro (AN912-1D)	1	18-8020 to 18-7609012 inclusive
-26	458 893	G	ELBOW - Attitude Gyro (AN822-3D)	1	18-8020 to 18-7609012 inclusive
	558 904	H	ELBOW - Attitude Gyro (1K1-4-4)	1	18-8020 to 18-7609012 inclusive
-27	18831-03	G	TUBE ASSEMBLY - Attitude gyro to suction gauge	1	18-8020 to 18-7609012 inclusive
	61541-33	H	HOSE - Attitude Gyro to suction gauge	1	18-8020 to 18-7809079 inclusive
-28	476 647	A	NIPPLE - Suction gauge (AN816-3D)	1	18-8020 to 18-7609012 inclusive
	451 881	A	ADAPTER - Suction gauge (1K10-2-4)	1	18-7609013 to 18-7809079 incl.
	451 881	M	ADAPTER - Suction gauge (1K10-2-4)	1	18-7809080 and up
-29	458 894	M	ELBOW - 90 degree (AN822-4D)	1	
	476 648	M	NIPPLE - Oil pressure gauge (AN816-4D)	1	
-30	81342-45		WASHER - Starter button hole cover	2	
-31	15000-00		PLATE - Cover (used when attitude gyro is not installed)	1	18-8020 to 18-7809079 inclusive
	11199-00		PLATE - Cover (used when attitude gyro, directional gyro or turn and bank indicator is not installed)	AR	18-7809080 and up
-32	450 787		INDICATOR - Suction gauge (F-3)	1	18-8020 to 18-7609012 inclusive
	550 664	J	INDICATOR - Suction gauge (1G3-4)	1	18-8020 to 18-7609012 inclusive
	550 838	M	INDICATOR - Suction gauge (AN5771-11)	1	18-7609013 and up
-33	451 939	K	ADAPTER - (1K10-4-6)	1	
-34	13541-04		TUBE - Airspeed	2	
-35	752 120	C	GAUGE ASSEMBLY - Mixture control indicator	1	
	751 915	B	GAUGE ASSEMBLY - Mixture control indicator	1	
-36	756 907		THERMOCOUPLE ASSEMBLY - (With Mounting Kit)	1	
-37	756 307		* THERMOCOUPLE - (Less Mounting Kit)	1	
-38	753 948		* CLAMP - Thermocouple probe attachment	1	
-39	753 949		* CLAMP ASSEMBLY - Thermocouple probe attachment	1	
-40	756 256		* MOUNTING SLEEVE - Thermocouple probe attachment	1	
-41	753 212		WIRE ASSEMBLY - Mixture control gauge	1	
-42	751 291		AMPLIFIER ASSEMBLY - Mixture control gauge	1	

A - Used if Directional Gyro and Attitude Gyro only are installed.
B - Used if Mixture Control Gauge Amplifier is installed.
C - Used if Mixture Control Gauge Amplifier is not installed.
D - Used if Directional Gyro, Attitude Gyro and Turn and Bank Indicator are installed.
E - Used if Directional Gyro and Turn and Bank Indicator only are installed.
F - Used if Attitude Gyro and Turn and Bank Indicator only are installed.
G - Used when suction gauge 450 787 is installed.
H - Used when suction gauge 550 664 is installed.
J - Not available. Order suction gauge 450 787 and parts coded for use with 450 787 gauge.
K - Used when vacuum system is not installed.
L - Used if Turn and Bank only is installed.
M - Not used on PA-18-150 with serial numbers 18-8209001 to 18-8309025 inclusive.

When ordering, always specify Part Number, Description and Serial Number of Aircraft

PIPER PARTS CATALOG

Figure and Index Number	Part Number	Code	NOMENCLATURE	No. Req.	SERIAL NUMBERS AFFECTED
16A-43	40885-00	B	SPACER - Directional gyro	1	18-7609013 and up
-44	40885-00	B	SPACER - Attitude gyro (1/2" thick)	1	18-7609013 and up
	40885-02	B	SPACER - Attitude gyro (5/8" thick)	1	18-7609013 and up
-45	458 948	B	ELBOW - (1K1-2-4)	3	18-7609013 and up
-46	558 913	B	ELBOW - (1K9-4-6)	2	18-7609013 and up
-47	451 939	B	UNION - (1K1-10-4-6)	2	18-7609013 and up
-48	24712-02	B	PLUG - Attitude gyro	1	18-7609013 and up
-49	24712-00	A,B	PLUG - Attitude gyro	1	18-7809080 and up
-50	487 042	B	PRESSURE SNUBBER - Suction gauge (12AG)	1	
-51	450 680		INSTRUMENT - Oil temperature and pressure (PAC 13416-02)	1	18-8209001 to 18-8309025 incl.

A - Used if Directional Gyro and Attitude Gyro only are installed.
B - Not used on PA-18-150 with serial numbers 18-8209001 to 18-8309025 inclusive.

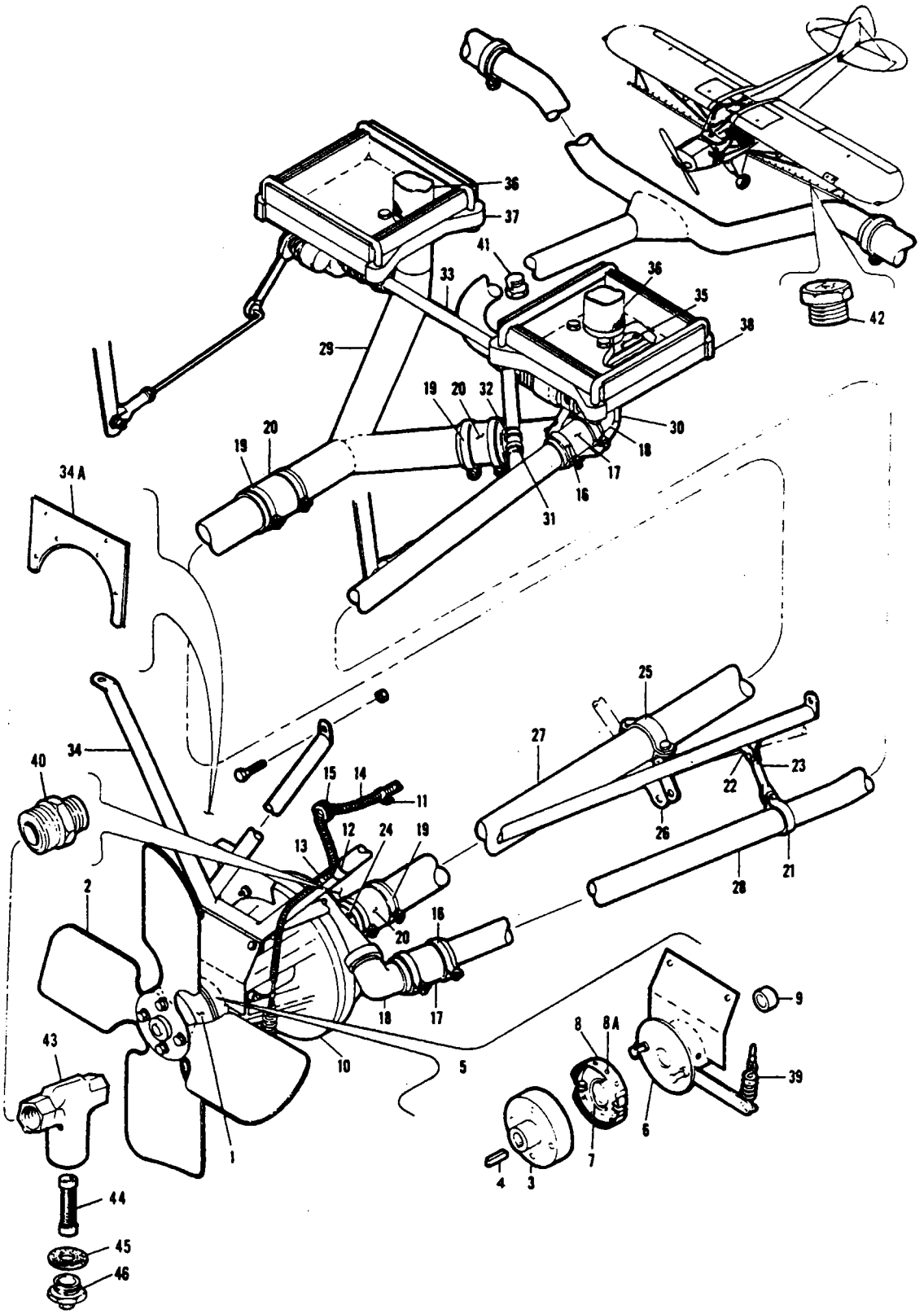

Figure 17. Fluid Spray Pump Installation

PIPER PARTS CATALOG

Figure and Index Number	Part Number	Code	NOMENCLATURE	No. Req.	SERIAL NUMBERS AFFECTED
			NOTE: See Figure 19 for balance of parts required for 1" Centrifugal Spray Pump Installation.		
17-	14136		DRAWING - 1" Centrifugal Pump Installation (Hi-Density)		18-1970 to 18-3013 inclusive
	14285		DRAWING - Sprayer Equipment Installation		18-3014 to 18-5901 inclusive
	14918		DRAWING - Sprayer Installation		18-5902 and up
-1	14139-00	A	PROPELLER ASSEMBLY - Sprayer	1	
-2	14138-00	A	PROPELLER	1	
-3	14133-00	A	DRUM - Brake	1	
-4	14130-02	A	KEY	1	
-5	14119-00	A	BRAKE SHOE ASSEMBLY - Propeller	1	
-6	14119-02	A	PLATE AND LEVER ASSEMBLY	1	
-7	487 302	B	SPRING - Return (No. 4733)	2	
-8	751 396	B	BRAKE LINING - (#4727) Brake shoe assembly	2	
-8a	752 823	B	RIVET - (#4730) Brake lining attachment	8	
-9	80012-81	A	BUSHING - Spacer	1	
-10	14117-02	A	PUMP ASSEMBLY - 1" Centrifugal	1	
-11	80032-55	A	CLAMP - Attachment, brake cable support	6	
-12	80002-27	C	CLAMP - Brake cable	1	
-13	80032-34	A	CLAMP - Attachment, brake cable	1	
-14	13520-04	A	CABLE ASSEMBLY - Brake	1	
-15	434 134	A	GROMMET - (AN931-6-10) On firewall	1	
-16	454 883	A	CLAMP - Hose, 1-1/4" (No. 51-13)	11	
-17	82371-18	A	HOSE - Connecting, 1-11/16" O.D. x 1-1/4" I.D. x 2-3/4" long	2	
-18	458 930	A	ELBOW - (AN842-21D)	2	
-19	454 884	A	CLAMP - Hose (No. 51-17)	7	
-20	82371-29	A	HOSE - Connecting, 2-1/8" O.D. x 1-3/4" I.D. x 4" long	3	
-21	10466-27	C	CLAMP	1	
-22	80002-13	C	CLAMP	1	
-23	14113-00	C	TUBE - Support	1	
	14809-00		TUBE - Support	1	18-5295 and up
-24	14112-00	A	FITTING - Pump	1	
-25	80222-29	C	CLAMP - Open	1	
-26	14114-00	C	BRACKET ASSEMBLY	1	
	14807-00		BRACKET ASSEMBLY - Tube support	1	18-5295 and up
-27	14109-00	C	TUBE ASSEMBLY - Pump inlet	1	
	14109-02		TUBE ASSEMBLY - Pump inlet	1	18-5295 and up
-28	14110-00	A	TUBE ASSEMBLY - Pump outlet	1	
-29	14106-00	A	TUBE ASSEMBLY - Hopper outlet, "Y"	1	
-30	14107-00	A	TUBE ASSEMBLY - Hopper outlet, LH	1	
-31	454 921	A	CLAMP - Hose (15/16")	4	
-32	82371-17	A	HOSE - Connecting, 1" O.D. x 5/8" I.D. x 2-3/4" long	2	

A - Used on PA-18A airplanes with serial numbers 18-1970 and up.
B - Used on both sprayer and duster installation.
C - Used on PA-18A airplanes with serial numbers 18-1 to 18-5294 inclusive.

When ordering, always specify Part Number, Description and Serial Number of Aircraft

PIPER PARTS CATALOG

Figure and Index Number	Part Number	Code	NOMENCLATURE	No. Req.	SERIAL NUMBERS AFFECTED
17-33	14126-00		TUBE ASSEMBLY - Hopper inlet	1	18-1970 and up
-34	14118-00	A	MOUNT ASSEMBLY - Propeller, "135"	1	
	14285-02	B	MOUNT ASSEMBLY - Propeller, "135" and "150"	1	
-34a	14810-00		PLATE - Adapter pump mounting	1	18-5295 and up
-35	14108-03		GASKET - Vellumoid, hopper outlet	2	18-1970 and up
-36	14132-00		SCREEN ASSEMBLY - Hopper outlet	2	18-1 to 18-5294 inclusive
-37	13963-07	C	PLATE ASSEMBLY - Hopper outlet, RH	1	
-38	13963-06	C	PLATE ASSEMBLY - Hopper outlet, LH	1	
-39	487 335	D	SPRING - Connecting, brake cable	1	
			INSTALLATION PARTS FOR NARROW SWATH		
	460 656		NIPPLE - Close (No. 3326 x 4)	18	18-1970 and up
	488 379		TEE - Pipe (No. 3700 x 4)	18	18-1970 and up
	480 937	A	PLUG - Pipe (No. 3152 x 4)	16	
-40	476 653		NIPPLE - Close, pump inlet (1-1/4 IPS)	1	18-5295 and up
-41	460 669	E	PLUG - Pipe (W/H 3152 x 2) (for narrow swath)	2	
-42	480 937	E	PLUG - Pipe (W/H 3152 x 4), boom, with low volume sprayer installation	22	
-43	487 593		SCREEN ASSEMBLY - Line strainers (#1-1/4 ATWAL)	1	18-5295 and up
-44	752 957		SCREEN - Line	1	18-5295 and up
-45	751 844		GASKET - Line screen	1	18-5295 and up
-46	753 883		END CAP - Screen assembly	1	

A - Used on PA-18A airplanes with serial numbers 18-1970 to 18-3770 inclusive, 18-3772 to 18-3785 inclusive.
B - Used on PA-18A airplanes with serial numbers 18-3771, 18-3786 and up.
C - When ordering this Plate Assembly for PA-18A airplanes with serial numbers 18-2639, 18-2646, 18-2647, 18-2650 and 18-2664, it will be necessary to secure two (2) attaching rods, part number 13967-00 with each plate ordered.
D - Used on both sprayer and duster installation.
E - Used on PA-18A airplanes with serial numbers 18-3014 and up.

When ordering, always specify Part Number, Description and Serial Number of Aircraft

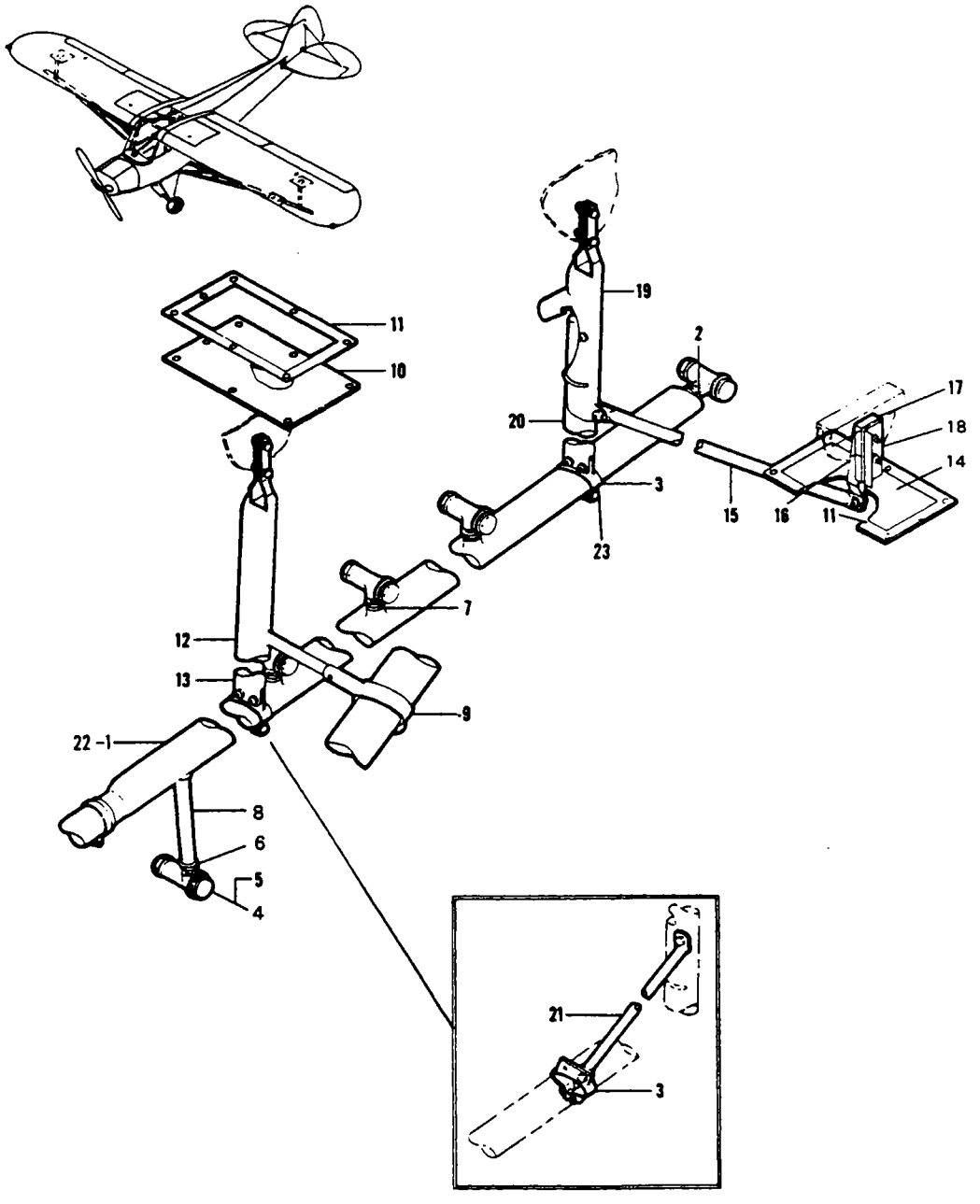

Figure 18. Boom Installation

PIPER PARTS CATALOG

Figure and Index Number	Part Number	Code	NOMENCLATURE	No. Req.	SERIAL NUMBERS AFFECTED
18-1	13789-02	A,B,C	BOOM ASSEMBLY - (Streamlined tube) LH	1	
	13789-03	A,B,C	BOOM ASSEMBLY - (Streamlined tube) RH	1	
	13789-04	A,B,C	BOOM ASSEMBLY - (Round tube)	2	
	13789-06	D,E	BOOM ASSEMBLY - (Streamlined tube) LH	1	
	13789-05	D,E	BOOM ASSEMBLY - (Streamlined tube) RH	1	
	14497-00		BOOM ASSEMBLY - Round	2	18-3771, 18-3786 to 18-5901
-2	476 656		* NIPPLE - Close spray nozzle installation, outboard end	1	18-1970 and up
	453 627		* BUSHING - Spray nozzle installation, outboard end	1	18-1970 and up
-3	13540-00		* CLAMP ASSEMBLY - Boom support (used with streamlined tube booms) (8 per ship with 1" pump installation)	2	18-1215 to 18-3770 inclusive, 18-3772 to 18-3785 inclusive
	13787-00		* CLAMP ASSEMBLY - Boom support (used with round tube booms) (8 per ship with 1" pump installation)	2	18-1215 to 18-3013 inclusive
	14492-00		* CLAMP ASSEMBLY - Boom support	8	18-3771, 18-3786 to 18-5901
-4	477 144		NOZZLE - Spray (15380-D8-45) Brass (46 used with Hi-volume)	24	
	477 134		NOZZLE - Spray (8355-1/8-D8-45NY) Nylon (46 used with Hi-volume)	24	
	479 371		* ORIFICE - (No. D8) (46 used with 1" pump installation)	1	
	455 126		* CORE - (#45) Brass (46 used with Hi-volume)	1	
	455 128		* CORE - (#45) Nylon (46 used with Hi-volume)	1	
	751 639		* DIAPHRAGM	1	
-5	477 131		NOZZLE ASSEMBLY - (#4664-D12-56) Brass	46	
	477 135		NOZZLE ASSEMBLY - (#8355-1/8-D12-56NY) Nylon	46	
	479 372		* ORIFICE - (No. D12) (46 used with Hi-volume)	1	
	455 127		* CORE - (No. 56) Brass (46 used with Hi-volume)	1	
	753 857		* CORE - (No. 56NY) Nylon (46 used with Hi-volume)	1	
-6	476 656		NIPPLE - Reducing (W/H 3325 x 2)	2	
-7	476 657		NIPPLE - Reducing (W/H 3325 x 4 x 2) (42 per ship with 1" pump installation) Hi-volume	20	
-8	13539-00		TUBE - Nozzle extension, inboard	2	
-9	13514-00		CLAMP ASSEMBLY - Sprayer boom brace	2	
-10	13495-00		PLATE - Trim	4	
-11	80541-02		GROMMET - Rectangular	6	
-12	13543-00		STRUT - Boom support inboard, upper	2	
-13	13542-03		STRUT - Boom support inboard, lower	2	
-14	13679-00		PLATE - Trim	2	
-15	13680-00		TUBE - Brace, boom support	2	
-16	12581-00		FITTING - Attachment	2	
-17	14371-03		BLOCK - Filler	2	
-18	14361-03		ANGLE - Brace tube	2	

A - Used on PA-18A airplanes with serial numbers 18-1215 to 18-3013 inclusive.
B - Used with Oberdorfer Gear Pump Assembly only.
C - Used with 3/4" Centrifugal Pump Assembly only.
D - Used with 1" Centrifugal Pump Assembly only.
E - Used on PA-18A airplanes with serial numbers 18-1970 to 18-3770 inclusive, 18-3772 to 18-3785 inclusive.

When ordering, always specify Part Number, Description and Serial Number of Aircraft

PIPER PARTS CATALOG

Figure and Index Number	Part Number	Code	NOMENCLATURE	No. Req.	SERIAL NUMBERS AFFECTED
18-19	13545-00		STRUT - Boom support outboard, upper	2	
-20	13542-02		STRUT - Boom support outboard, lower	2	
-21	13680-02	A	TUBE - Brace, boom support	4	18-1970 and up
-22	14917-00		BOOM ASSEMBLY - (Streamlined tube) LH	1	18-5902 and up
	14917-01		BOOM ASSEMBLY - (Streamlined tube) RH	1	18-5902 and up
-23	14914-00		CLAMP ASSEMBLY	4	18-5902 and up

A - Used with 1" Centrifugal Pump Assembly only.

When ordering, always specify Part Number, Description and Serial Number of Aircraft

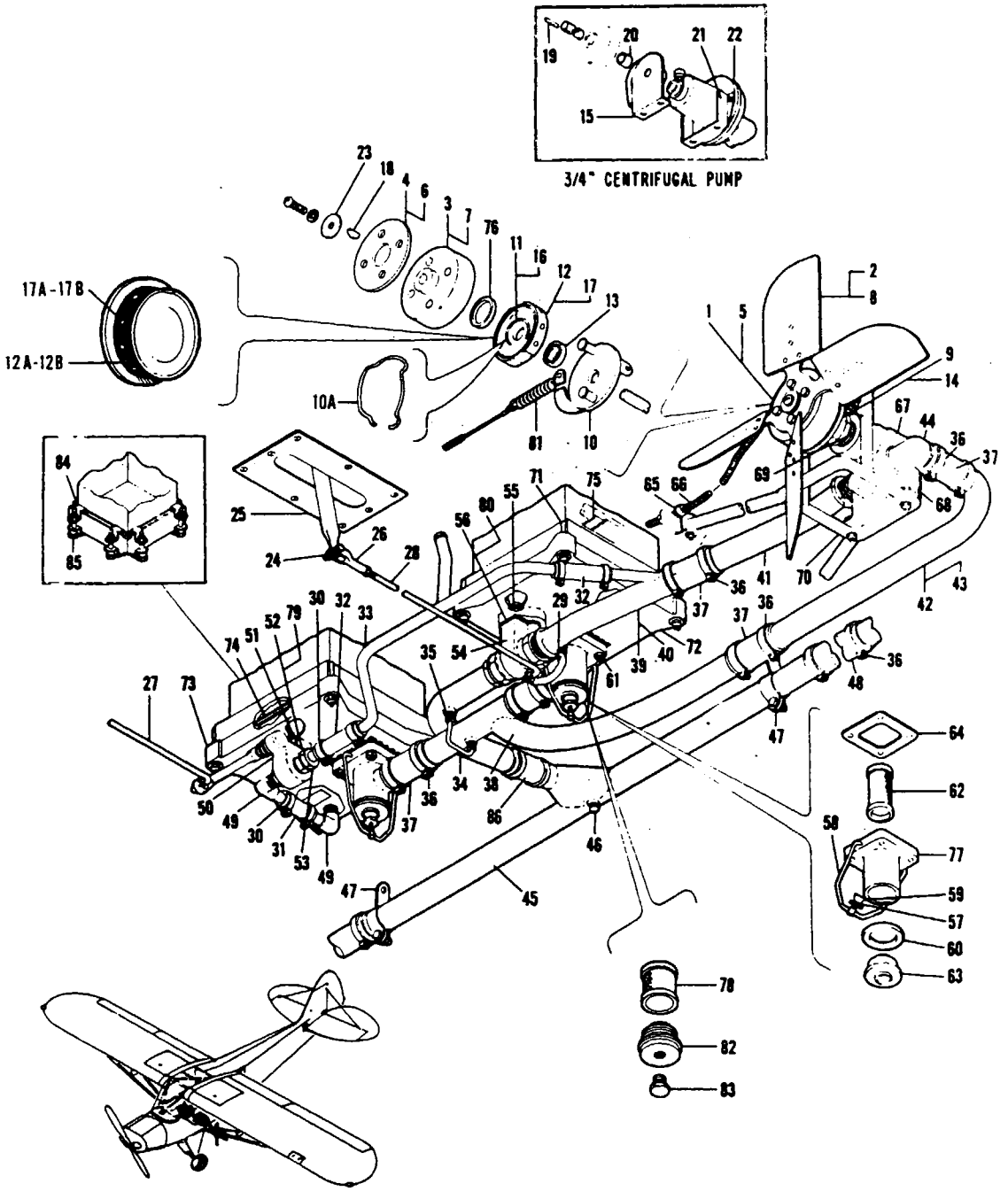

Figure 19. Sprayer Equipment Installation

Figure and Index Number	Part Number	Code	NOMENCLATURE	No. Req.	SERIAL NUMBERS AFFECTED
			NOTE: This Sprayer Installation Group includes parts for the three (3) types of spray pumps, namely, Oberdorfer Gear Pump; 3/4" Centrifugal Simplex Pump and the 1" Centrifugal Simplex Pump (high density). The parts peculiar to each pump installation, are identified in the Code Column. Those items not coded apply to all types of spray pump installations. See Figure 17 for balance of parts applicable to the 1" Centrifugal Spray Pump Installation.		
19-	13547	AB	DRAWING - Sprayer Installation (Rev. A to Q inclusive)		18-1215 to 18-3013 inclusive
	13547	CD	DRAWING - Sprayer Installation (Rev. R and up)		
	14137	C	DRAWING - 3/4" Centrifugal Pump Installation		
-1	13558-00	AEF	PROPELLER ASSEMBLY - Sprayer (three (3) blades)	1	
	14359-00	GH	PROPELLER ASSEMBLY - Duster	1	
-2	13677-00	AF	PROPELLER - (Three (3) blades)	1	
-3	13529-00	AEF	DRUM - Brake	1	
	14363-00	GH	DRUM - Brake	1	
-4	13518-00	AE	WASHER - Spacer	1	
		FJ	WASHER - Spacer		
-5	14146-00	CJ	PROPELLER ASSEMBLY - Sprayer (four (4) blades)	1	
-6	13518-00	AE	SPACER	1	
		FJ	SPACER		
-7	14129-00	CJ	DRUM - Brake	1	
-8	14145-00	CJ	PROPELLER - (Four (4) blades)	1	
-9	13517-00	AEF	BRAKE SHOE ASSEMBLY - Propeller	1	
	14358-00	GH	BRAKE SHOE ASSEMBLY - Propeller	1	
-10	13517-02	AEF	PLATE AND LEVER ASSEMBLY	1	
	14358-02	GH	PLATE AND LEVER ASSEMBLY	1	
-10a	14357-00	GH	SPRING - Return	1	
-11	487 302	F	SPRING - Return (No. 4733)	2	
-12	486 600	F	BRAKE SHOE - (No. 4736)	2	
-12a	751 396	F	BRAKE LINING - (#4727) Brake shoe assembly	2	
-12b	752 823	F	RIVET - (#4730) Brake lining attachment	8	
-13	452 343	AEF	BEARING - (No. S-5-R-PP)	1	

A - Oberdorfer Gear Pump.
B - Used on airplanes when bottom sprayer plates attached to hopper tank with clamps.
C - Used on PA-18A airplanes with serial numbers 18-1970 to 18-3013 inclusive.
D - Used on airplanes when bottom sprayer plates attached to hopper tank with rods.
E - Used on PA-18A airplanes with serial numbers 18-1262 to 18-3729 inclusive and 18-3731.
F - Used on both sprayer and duster installation.
G - Used on PA-18A airplanes with serial numbers 18-3730, 18-3732 and up.
H - Used with duster installation only.
J - 3/4" Centrifugal Pump.

PIPER PARTS CATALOG

Figure and Index Number	Part Number	Code	NOMENCLATURE	No. Req.	SERIAL NUMBERS AFFECTED
19-14	14142-00	D,E	BRAKE SHOE ASSEMBLY - Propeller	1	
-15	14142-02	D,E	* PLATE AND LEVER ASSEMBLY	1	
-16	487 302	C	* SPRING - Return (No. 4733)	2	
-17	486 600	C	* BRAKE SHOE - (No. 4736)	2	
-17a	751 396	C	* * BRAKE LINING - (No. 4727) Brake shoe assembly	2	
-17b	752 823	C	* * RIVET - (No. 4730) Brake lining attachment	8	
-18	424 910	B,C	KEY - Woodruff (AM STD No. 404)	1	
-19	14130-03	D,E	KEY - Pump shaft	1	
-20	80012-87	D,E	BUSHING - Spacer	1	
-21	14135-00	D,E	PLATE ASSEMBLY - Mounting 3/4" pump	1	
-22	14147-00	D,E	PUMP ASSEMBLY - 3/4" centrifugal (simplex)	1	
-23	13497-00	A,B,C	PLATE - Retainer	1	
	13497-02	F,G	PLATE - Retainer	1	
-24	85012-06	C	WASHER - Steel	4	
	85012-47	C	WASHER - Fibre	4	
-25	13567-00	C	PLATE - Trim	2	
-26	454 900		CLEVIS - (AN486-3)	2	
-27	13554-02		ROD - RH (7 7/8" L)	1	
	13554-04	H	ROD - RH (5 5/8" L)	1	
-28	13554-03		ROD - LH (11" L)	1	
	13554-05	J	ROD - LH (8 1/2" L)	1	
-29	13556-00		ARM ASSEMBLY - LH	1	
-30	454 921		CLAMP - Hose (15/16")	6	
-31	82371-20	A	HOSE - Connecting, flexible (1" OD x 5/8" ID x 3-5/8" lg)	1	
	82371-16	B,E,K,L	HOSE - Connecting, flexible (1" OD x 5/8" ID x 1-7/8" lg)	1	
	82371-97	H	HOSE - Connecting, flexible (1" OD x 5/8" ID x 6" lg)	1	
-32	82371-17	K	HOSE - Connecting, flexible (1" OD x 5/8" ID x 2-3/4" lg)	2	
	82371-97	J	HOSE - Connecting, flexible (1" OD x 5/8" ID x 6" lg)	2	
-33	13553-00	B,E,K	TUBE ASSEMBLY	1	
-34	11987-45	B,E,K	TUBE ASSEMBLY - Vent (7-1/2" L)	1	
	11987-57	J	TUBE ASSEMBLY - Vent (10" L)	1	
-35	460 651	B,E,K	CONNECTOR - (W/H 200 x 2)	2	

A - Used on PA-18A airplanes with serial numbers 18-1262 to 18-3729 inclusive and 18-3731.
B - Oberdorfer Gear Pump.
C - Used on both sprayer and duster installation.
D - Used on PA-18A airplanes with serial numbers 18-1970 to 18-3013 inclusive.
E - 3/4" Centrifugal Pump.
F - Used on PA-18A airplanes with serial numbers 18-3730, 18-3732 and up.
G - Used with duster installation only.
H - Used if Valve Kit 756 871 has been installed.
J - Used if Valve Kit 756 872 has been installed.
K - Used on PA-18A airplanes with serial numbers 18-1215 to 18-3013 inclusive.
L - Used on airplanes when bottom sprayer plates attached to hopper tank with clamps.

When ordering, always specify Part Number, Description and Serial Number of Aircraft

Figure and Index Number	Part Number	Code	NOMENCLATURE	No. Req.	SERIAL NUMBERS AFFECTED
19-36	454 883		CLAMP - Hose (1-1/4") No. 51-13	14	
-37	82371-18	B	HOSE - Connecting, flexible (1-11/16" OD x 1-1/4" ID x 2-3/4" lg)	5	
-38	13534-00	BCD	TUBE ASSEMBLY	1	
-39	13552-00	BC	TUBE ASSEMBLY	1	
-40	14141-00	DF	TUBE ASSEMBLY	1	
-41	13551-00	BC	TUBE ASSEMBLY	1	
-42	13515-00	BC	TUBE	1	
-43	14134-00	DF	TUBE	1	
-44	458 930	BCD	ELBOW - (AN842-21D)	1	
-45	13550-00		TUBE ASSEMBLY	1	
-46	460 669	G	PLUG - Pipe (W/H 3152 x 2)	1	
-47	13524-00	H	CLAMP ASSEMBLY	2	
	14808-00		BRACKET - Boom support to fuselage	2	
-48	82371-19		HOSE - Connecting, flexible (1-11/16" OD x 1-1/4" ID x 8" lg)	2	
-49	458 926		ELBOW - (AN842-10D)	2	
-50	492 025	A	VALVE - 1/2" Inlet (No. 130)	1	
	753 124	K	VALVE - 1/2" Inlet (No. 736)	1	
-51	13566-02		BOLT - Mounting, inlet valve	2	
	403 107	K	BOLT - (AN4-C12A)	2	
	404 888	K	NUT - (MS20365-428C)	2	
-52	13564-03		PLATE - Mounting, vellumoid	1	
	15289-00	K	PLATE - Mounting, aluminum	1	
-53	451 860		ADAPTER - (AN840-10D)	1	
-54	492 026	J	VALVE - 1", outlet (No. 130)	1	
	756 500	E	VALVE - 1", outlet (No. 736)	1	
-55	13566-03		BOLT - Mounting, outlet valve	2	
	403 107	E	BOLT - (AN4-C12A)	2	
	404 888	E	NUT - (MS20365-428C)	2	
-56	13561-03		PLATE - Mounting, vellumoid	1	
	15290-00	E	PLATE - Mounting, aluminum	1	

A - Not available. Valve Kit 756 871 will be supplied as a replacement. Order Part No. 753 124 if Valve Replacement Kit 756 871 has been installed.
B - Used on PA-18A airplanes with serial numbers 18-1215 to 18-3013 inclusive.
C - Oberdorfer Gear Pump.
D - 3/4" Centrifugal Pump.
E - Used if Valve Kit 756 872 has been installed.
F - Used on PA-18A airplanes with serial numbers 18-1970 to 18-3013 inclusive.
G - Two (2) each per ship with one (1) inch Simplex Pump Installation.
H - Used on PA-18A airplanes with serial numbers 18-1 to 18-5533 inclusive.
J - Not available. Valve Kit 756 872 will be supplied as a replacement. Order Part No. 756 500 if Valve Replacement Kit 756 872 has been installed.
K - Used if Valve Kit 756 871 has been installed.

PIPER PARTS CATALOG

Figure and Index Number	Part Number	Code	NOMENCLATURE	No. Req.	SERIAL NUMBERS AFFECTED
19-57	72302-03	ABCD	BAIL NUT - No. 61P (452 017)	2	
-58	494 644	ABCD	BAIL - Wire No. 1P (452 018)	2	
-59	752 273	ABCD	BOWL - Seat No. 150P (453 130)	2	
-60	85012-32	ABCD	GASKET - Strainer (462 033)	2	
-61	402 821	ABCD	BOLT - (13566-02)	8	
-62	13560-04	ABCD	SCREEN ASSEMBLY	2	
-63	13966-00	ABCD	CAP	2	
-64	14108-03	ABCD	GASKET	2	
-65	80032-34	BCE	CLAMP - Attachment	1	
-66	13520-00	BCE	CABLE ASSEMBLY - Brake	1	
-67	13573-00	BF	PUMP ASSEMBLY - Sprayer (Oberdorfer Gear Pump)	1	
-68	751 830	BF	GASKET - Back plate	1	
-69	752 696	BF	PACKING - Pump shaft	1	
-70	13530-00	BCE	MOUNT ASSEMBLY - Propeller	1	18-1 to 18-5533 inclusive
	14827-00	G	MOUNT ASSEMBLY - Propeller, duster	1	
-71	13967-00	EH	ROD - Attachment	4	18-1970 and up
-72	13963-03	ABCD	PLATE ASSEMBLY - Hopper outlet, LH	1	
	13548-00	ABCJ	PLATE ASSEMBLY - Hopper outlet, LH	1	
-73	13963-02	ABCD	PLATE ASSEMBLY - Hopper outlet, RH	1	
	13549-00	BCFJ	PLATE ASSEMBLY - Hopper outlet, RH	1	
-74	13767-00	E	RING - Seal (426 011)	2	
-75	13557-00	E	GROMMET - Hopper opening seal	2	
-76	82732-80	BEFK	BEARING - Pump shaft	1	
-77	13965-00	ABCD	FITTING - Hopper, outlet	2	
-78	13560-00	BCFJ	SCREEN ASSEMBLY - Hopper outlet	2	

A - Used on PA-18A airplanes with serial numbers 18-1970 to 18-3013 inclusive.
B - Oberdorfer Gear Pump.
C - 3/4" Centrifugal Pump.
D - Used on airplanes with Oberdorfer Gear Pump or 3/4" Centrifugal Pump when bottom sprayer plates attached to hopper tank with rods.
E - Used on both sprayer and duster installation.
F - Used on PA-18A airplanes with serial numbers 18-1215 to 18-3013 inclusive.
G - Used with duster installation only.
H - Used only when duster agitator plate or bottom sprayer plates are attached to hopper tank with rods.
J - Used on airplanes with Oberdorfer Gear Pump or 3/4" Centrifugal Pump when bottom sprayer plates attached to hopper tank with clamps.
K - Used only when brake drum not equipped with bearing boss.

When ordering, always specify Part Number, Description and Serial Number of Aircraft

PIPER PARTS CATALOG

Figure and Index Number	Part Number	Code	NOMENCLATURE	No. Req.	SERIAL NUMBERS AFFECTED
19-79	13564-02	FG	PLATE - Mounting, aluminum	1	
-80	13561-02	FG	PLATE - Mounting, aluminum	1	
-81	487 335	E	SPRING - Connecting	1	
-82	13559-00	BCFG	CAP - Hopper outlet	2	
-83	480 937	BCFG	PLUG - Pipe (W/H 3152 x 4)	2	
-84	13500-00	DEF	CLAMP ASSEMBLY - Hopper outlet	16	
-85	13501-00	DEF	BOLT	16	
-86	82371-19	A	HOSE - Flexible (1-11/16" OD x 1-1/4" ID x 8" lg)	1	

A - Used if Valve Kit 756 872 has been installed.
B - Oberdorfer Gear Pump.
C - 3/4" Centrifugal Pump.
D - Used only when duster agitator plate or bottom sprayer plates are attached to hopper tank with clamps.
E - Used on both sprayer and duster installation.
F - Used on PA-18A airplanes with serial numbers 18-1215 to 18-3013 inclusive.
G - Used on airplanes with Oberdorfer Gear Pump or 3/4" Centrifugal Pump when bottom sprayer plates attached to hopper tank with clamps.

When ordering, always specify Part Number, Description and Serial Number of Aircraft

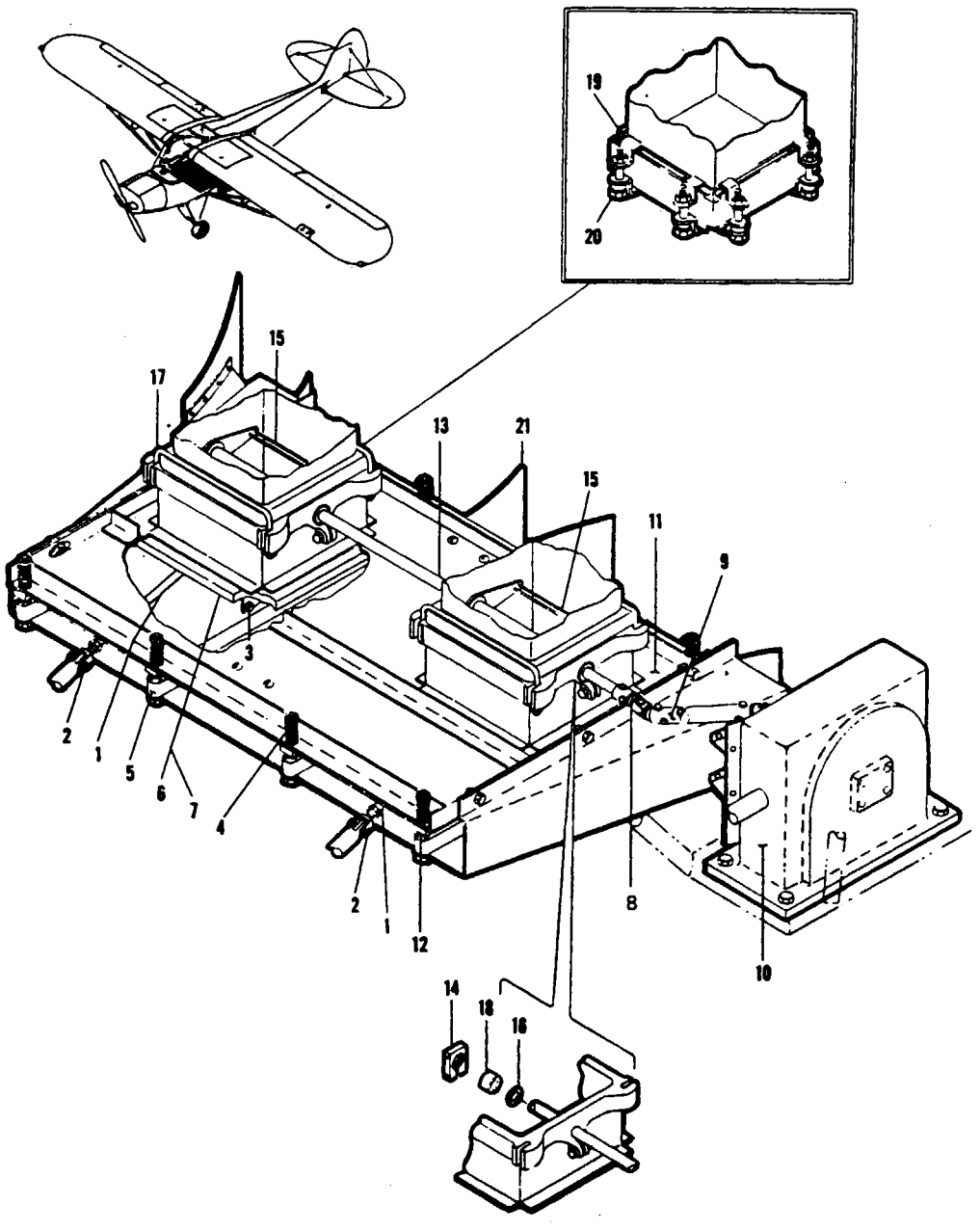

Figure 20. Duster Equipment Installation

Figure and Index Number	Part Number	Code	NOMENCLATURE	No. Req.	SERIAL NUMBERS AFFECTED
			NOTE: See Figures 17 and 19 for duster installation parts not listed below. These parts are readily identified in the parts listing for Figures 17 and 19 by a code which reads "Used on Duster Installation only".		
20-	13641	A	DRAWING - Duster Installation		
	14365	B	DRAWING - Duster Installation		
-1	13634-00	A	ROD ASSEMBLY - Gate control	2	
	13634-02	B	ROD ASSEMBLY - Gate control	2	
-2	12605-02		CLEVIS - Rod assembly	1	
-3	13631-00	A	ROD - Attachment, control rod to gate	2	
-4	83302-28		SPRING	8	
-5	13632-00		TUBE ASSEMBLY - Gate retainer	4	
-6	13619-00	A	GATE ASSEMBLY - Dusting	2	
	14356-00	B	GATE ASSEMBLY - Dusting and seeding	2	
-7	13628-00	A	GATE ASSEMBLY - Seeding	2	
-8	13637-00		JOINT ASSEMBLY - Universal	2	
-9	13636-00		TUBE - Connector	1	18-1 to 18-5533 inclusive
	13636-02		TUBE - Connector	1	18-5534 and up
-10	13638-00		GEAR BOX ASSEMBLY	1	
-11	13641-02	A	PLATE ASSEMBLY - Duster agitator, complete	1	
	14353-00	B	PLATE ASSEMBLY - Agitator, complete	1	
-12	13598-00		STRIP - Rubbing	4	
-13	13594-00	A	SHAFT - Agitator drive	1	
	14348-00	B	SHAFT - Agitator	1	
-14	13595-00	CD	BLOCK	4	
-15	13596-00		AGITATOR ASSEMBLY	2	
-16	85012-81	A	WASHER	4	
	14347-00	B	WASHER	4	
-17	13967-00	EF	ROD - Attachment	4	18-1970 and up
-18	452 343	A	BEARING - (No. S-5-R-PP)	4	
	14360-00	B	BEARING	4	
-19	13500-00	EG	CLAMP ASSEMBLY - Hopper outlet	16	18-1215 to 18-3013 inclusive
-20	13501-00	EG	BOLT	16	18-1215 to 18-3013 inclusive
-21	13625-00	A	VENTURI ASSEMBLY	1	
	14349-00	B	VENTURI ASSEMBLY	1	
	14175-79	B	BUSHING - Spacer, gear box to propeller assembly	4	
	14435-00	B	PLATE - Cover, brake line	2	
	453 647	B	BUMPER - Snap in #4235	2	

A - Used on PA-18A airplanes with serial numbers 18-1262 to 18-3729 inclusive and 18-3731.
B - Used on PA-18A airplanes with serial numbers 18-3730, 18-3732 and up.
C - Used on PA-18A airplanes with serial numbers 18-1215 to 18-3013 inclusive.
D - Used only when agitator plate is attached to hopper tank with clamps.
E - Used on both duster and sprayer installation.
F - Used only when duster agitator plate or bottom sprayer plates are attached to hopper tank with rods.
G - Used only when duster agitator plate or bottom sprayer plates are attached to hopper tank with clamps.

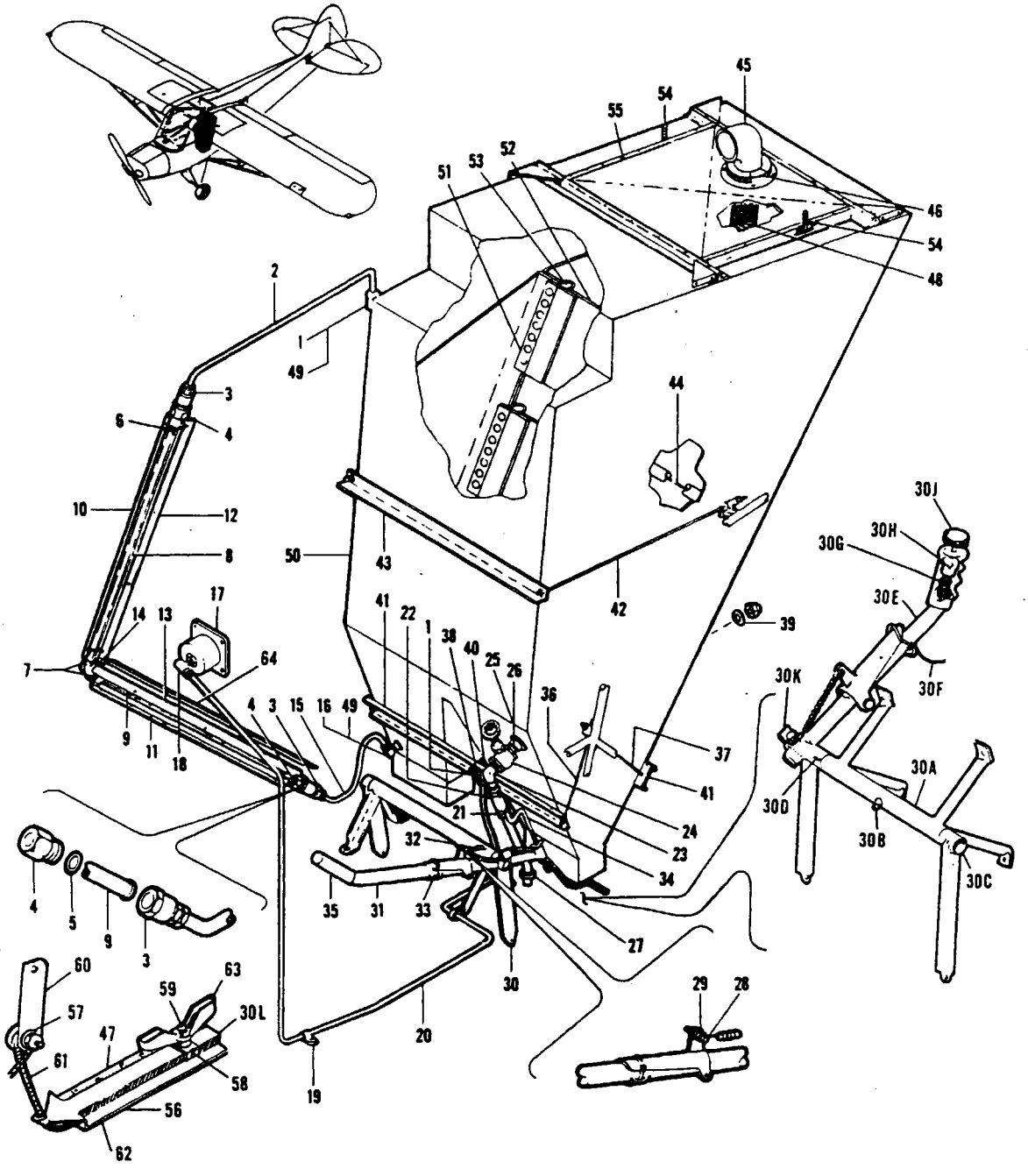

Figure 21. Hopper Installation

Figure and Index Number	Part Number	Code	NOMENCLATURE	No. Req.	SERIAL NUMBERS AFFECTED
21-	13546		DRAWING - Hopper Installation		
-1	13576-00		ELBOW	2	
-2	11987-49		TUBE ASSEMBLY - Aluminum, upper	1	
-3	460 685		CONNECTOR - (W/H 200 x 4)	2	
-4	455 159		CONNECTOR - (W/H 66 x 6A)	2	
-5	484 701		"O" RING - Packing (AN6227-7)	4	
-6	11473-41		CLIP - Retaining	4	
-7	454 924		CLAMP - Tinnerman (A3122-10)	2	
-8	13580-03		TUBE - Glass 19-1/8" (489 632) upper	1	
-9	13580-02		TUBE - Glass 29-1/4" (489 633) lower	1	
-10	14490-00		CHANNEL ASSEMBLY - Upper, includes windshield strip and calibrated strip	1	
-11	13579-00		CHANNEL ASSEMBLY - Lower	1	
-12	13581-00		STRIP - Calibrated, upper	1	18-1215 to 18-3013 inclusive
-13	13582-00		STRIP - Calibrated, lower	1	
-14	82371-21		HOSE - Connecting	1	
-15	11987-03		TUBE ASSEMBLY - Aluminum, lower	1	
-16	460 677		ELBOW - Lower (W/H 400 x 4)	1	
-17	13748-00		GAUGE - Pressure	1	
-18	458 906		ELBOW - (W/H 450 x 4)	1	
-19	80032-55		CLAMP - Attachment	2	
-20	11987-47		TUBE ASSEMBLY	1	
-21	454 882		CLAMP - Hose (1") (2 at pressure regulating valve)	2	
-22	82371-59		HOSE - Connecting, flexible (1" OD x 5/8" ID x 4-3/4" lg)	1	
-23	13577-00		ELBOW - Regulator valve	1	
-24	492 027		VALVE - 1/2" globe, pressure regulating (No. 107)	1	
-25	476 658		NIPPLE - (W/H 3326 x 8)	1	
-26	480 938		PLUG - Pipe (W/H 3152 x 8) (Used when sprayer equipment is not installed)	1	
-27	434 142		GROMMET - (AN931-14-20)	1	
-28	70371-03		STUD - Swivel fitting	1	
-29	70371-02		FITTING ASSEMBLY - Swivel	1	
-30	13503-00	A	LEVER ASSEMBLY - Hopper outlet control	1	
	14828-00		LEVER ASSEMBLY - Hopper outlet control	1	18-5295 and up
	14326-00	B	LEVER ASSEMBLY - Hopper outlet control	1	
-30a	14324-00		MOUNT ASSEMBLY	1	18-5295 and up
	14324-00	B	MOUNT ASSEMBLY	1	
-30b	460 690		FITTING - Grease	1	18-3633 and up
-30c	14819-00		ARM ASSEMBLY - R.H.	1	18-5295 and up
	14321-00	B	ARM ASSEMBLY - R.H.	1	
-30d	14826-00		ARM ASSEMBLY - L.H.	1	18-5295 and up
	14328-00	B	ARM ASSEMBLY - L.H.	1	
-30e	14322-03		LEVER ASSEMBLY	1	18-5295 and up

A - used on PA-18A airplanes with serial numbers 18-1262 to 18-3632 inclusive.
B - Used on PA-18A airplanes with serial numbers 18-3633 to 18-5294 inclusive.

When ordering, always specify Part Number, Description and Serial Number of Aircraft

PIPER PARTS CATALOG

Figure and Index Number	Part Number	Code	NOMENCLATURE	No. Req.	SERIAL NUMBERS AFFECTED
21-30f	14818-00		* CABLE - Indicator control	1	18-5295 and up
-30g	14822-00		* ROD - Indicator control	1	18-5295 and up
-30h	14824-00		* BUSHING - Indicator rod	1	18-5295 and up
-30j	14825-00		* KNOB - Indicator control	1	18-5295 and up
-30k	80032-34		* CLAMP - Brake cable	1	18-5295 and up
	80032-34	A	* CLAMP - Cable	1	
-30l	14821-00		* INDICATOR ASSEMBLY - Hopper	1	18-5295 and up
-31	13504-00	B	* HANDLE ASSEMBLY - Propeller brake control	1	
	14322-00	A	* LEVER ASSEMBLY	1	
-32	42891-00	B	* SPRING - Brake release	1	
-33	13508-00	B	* SPRING - Tension, brake keeper	1	
-34	13509-00	B	* ROD - Hopper lever stop	1	
-35	463 364		* GRIP - Handle, rubber	1	
-36	13284-04		ROD - Attachment, lower, front	2	
-37	13284-03		ROD - Attachment, lower, rear	2	
-38	80122-23		WASHER - Bottom, front	1	
-39	80122-10		WASHER - Bottom, rear	1	
-40	13757-00		ROD - Tie, lower	1	
-41	13467-00		CHANNEL ASSEMBLY - Hopper mounting, lower, front and rear	2	
-42	13284-05		ROD - Attachment, upper	2	
-43	13521-00		ANGLE - Hopper support, upper front	1	
-44	13284-02		ROD - Rear seat and hopper attachment	1	
-45	14104-00	C,D	SCOOP ASSEMBLY - Hopper air	1	
-46	462 013	C	* GASKET - (No. 1186)	1	
-47	14315-00	E	PLACARD - Hopper opening indicator	1	
-48	14101-00	C	SCREEN - Filler neck	1	
-49	460 669		PLUG - Pipe (W/H 3152 x 2) (Used when sprayer equipment not installed)	2	
-50	13378-04		HOPPER ASSEMBLY	1	
-51	14097-03	F	* HINGE - Half (riveted to hopper)	6	
-52	14099-00	F	* BAFFLE ASSEMBLY - Removable	2	
-53	14098-00	F	* ROD - Attachment	6	
-54	13301-00	G	* ROD - Hopper door attachment (threaded)	2	
-55	406 779		* NUT - Anchor (Boots No. W2SE1032)	36	

A - Used on PA-18A airplanes with serial numbers 18-3633 to 18-5294 inclusive.
B - Used on PA-18A airplanes with serial numbers 18-1262 to 18-3632 inclusive.
C - Used on airplanes with serial numbers 18-2493, 18-2494, 18-2496, 18-2499, 18-2503, 18-2504, 18-2509 and up.
D - Used on both duster and sprayer installation.
E - Used on PA-18A duster airplanes with serial numbers 18-3640 to 18-5294 inclusive.
F - Used on airplanes with serial numbers 18-2491, 18-2494, 18-2499 and up.
G - Used only when hopper door handles not installed on aircraft.

When ordering, always specify Part Number, Description and Serial Number of Aircraft

PIPER PARTS CATALOG

Figure and Index Number	Part Number	Code	NOMENCLATURE	No. Req.	SERIAL NUMBERS AFFECTED
21-56	14325-02	A	INDICATOR ASSEMBLY - Hopper opening	1	
-57	14287-00	A	WASHER - Retainer	1	
-58	14316-00	A	POINTER	1	
-59	14317-00	A	BOLT - Stop	1	
-60	14318-00	A	LINK - Attachment (cable to lever)	1	
-61	14319-02	A	CABLE ASSEMBLY	1	
-62	14320-00	A	PLATE ASSEMBLY	1	
-63	477 641	A	NUT - Wing (#BA1457-A)	1	
-64	14953-00		STRIP - Hopper gauge lower calibration	1	

A - Used on PA-18A duster airplanes with serial numbers 18-3640 to 18-5294 inclusive.

When ordering, always specify Part Number, Description and Serial Number of Aircraft

1D24
INTENTIONALLY LEFT BLANK

Figure and Index Number	Part Number	Code	NOMENCLATURE	No. Req.	SERIAL NUMBERS AFFECTED
22-	13714		DRAWING - Cargo Compartment Installation		
-1	13709-03		STRAP ASSEMBLY - Tip end	2	
-2	13709-02		STRAP ASSEMBLY - Buckle end	2	
-3	13707-00		BRACKET - Attachment, front, LH	1	
-4	13707-01		BRACKET - Attachment, front, RH	1	
-5	13708-00		BRACKET - Attachment, rear	2	
-6	13715-00		COVER ASSEMBLY - Torque tube	1	
-7	13703-00		PANEL - Floor (when electrical equipment is installed)	1	
-8	13703-21		PANEL - Floor (when electrical equipment is not installed)	1	
-9	13706-00		PLUNGER - Panel attachment	4	
-10	13704-00		SPACER - Front plunger attachment	2	
-11	13705-00		FITTING - Plunger attachment	4	
-12	487 304		SPRING - Plunger attachment	4	

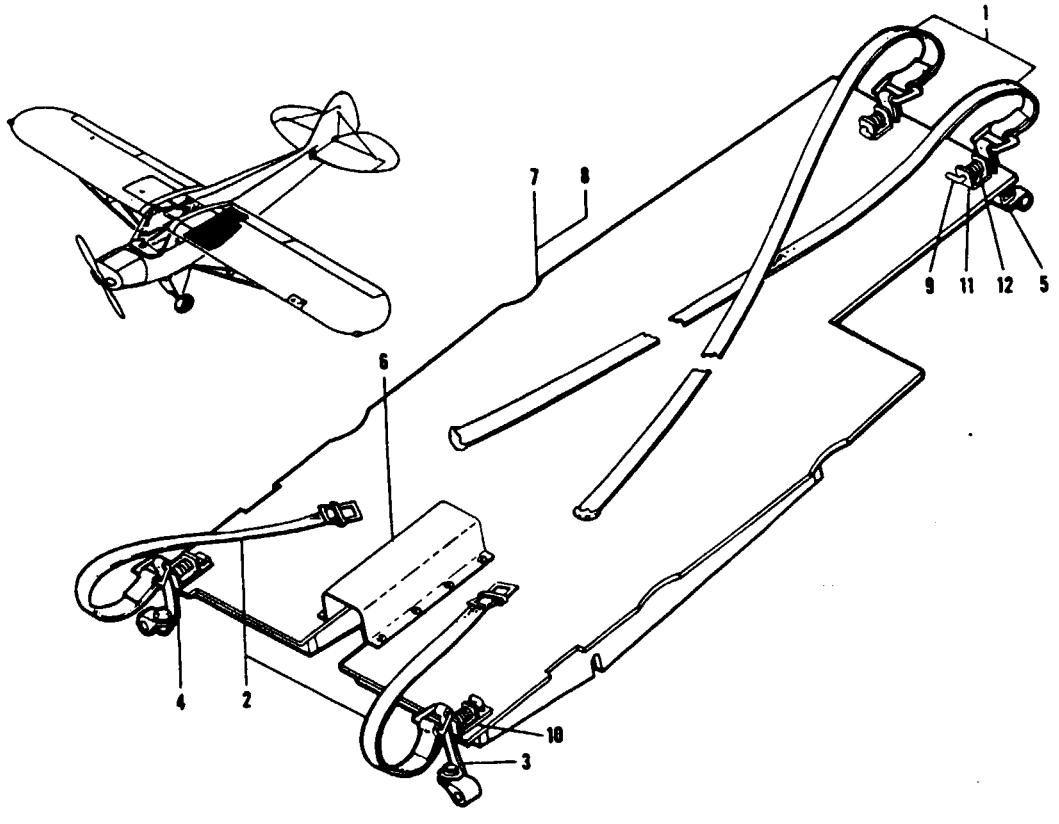

Figure 22. Cargo Compartment Installation

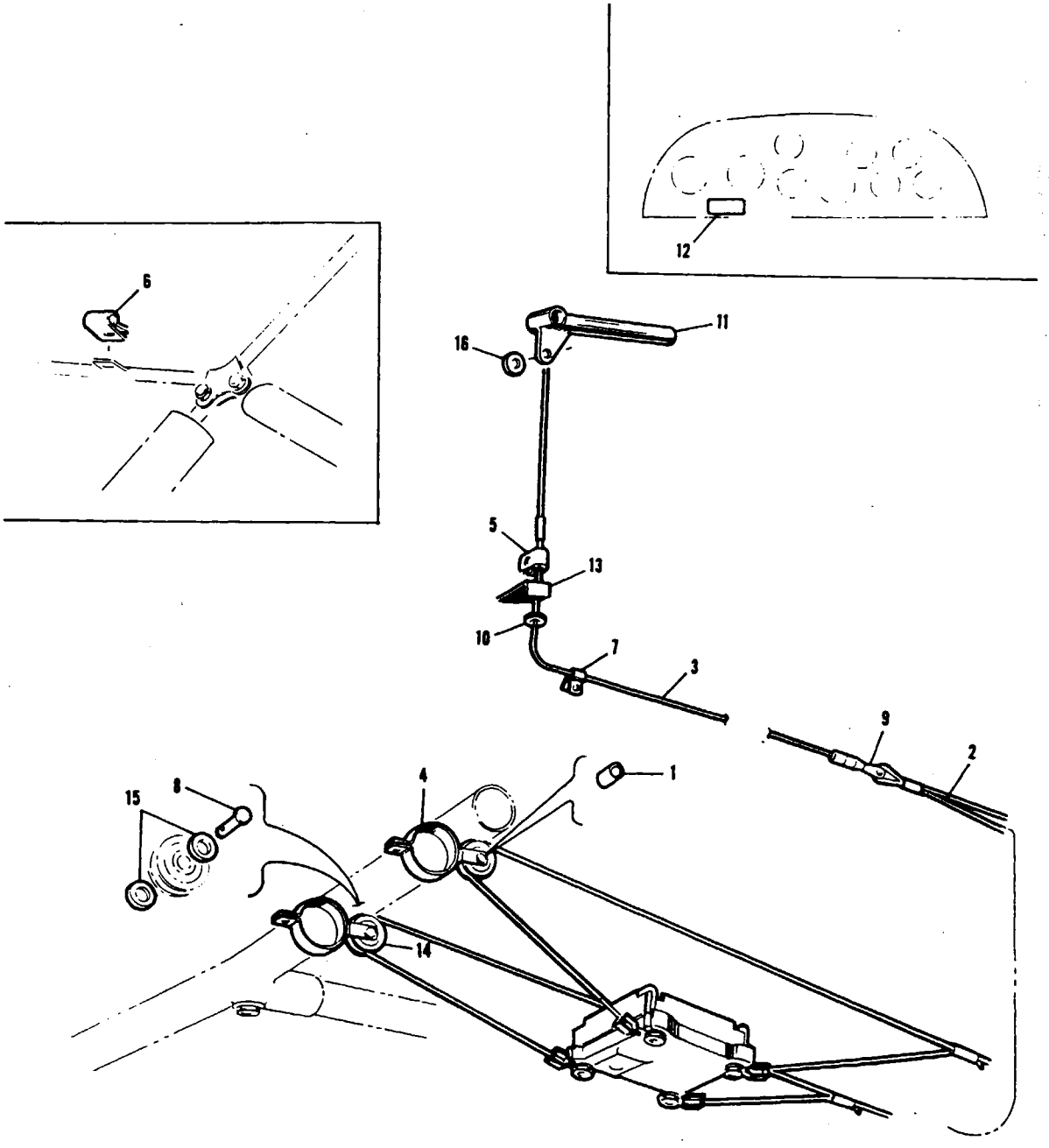

Figure 22A. Emergency Dump Installation

PIPER PARTS CATALOG

Figure and Index Number	Part Number	Code	NOMENCLATURE	No. Req.	SERIAL NUMBERS AFFECTED
22A-1	80012-04	A	BUSHING - Insert, dump cable pulley	2	
-2	14282-00	A	CABLE ASSEMBLY - Emergency dump, rear	1	
-3	14281-00	A	CABLE ASSEMBLY - Emergency dump, front	1	
-4	14280-00	A	CLAMP ASSEMBLY - Dump cable pulley	2	
-5	10466-08	A	CLAMP - Cable emergency dump	1	
-6	80032-34	A	CLAMP - Dump cable support	1	
-7	80032-39		CLAMP - Offset, attachment (dump cable support clamp)	1	18-1 to 18-5294 inclusive
-8	424 177	A	CLEVIS PIN - Emergency dump cable installation, rear (AN393-17)	2	
-9	424 173	A	CLEVIS PIN - Emergency dump cable attachment, (AN393-9)	1	
-10	434 128	A	GROMMET - Dump valve cable installation (AN931-4-7)	1	
-11	14279-00	A	LEVER ASSEMBLY - Emergency dump	1	
-12	14290-00	A	PLACARD - Emergency dump lever	1	
-13	14278-00	A	PLATE - Guide dump cable	1	
-14	80421-00	A	PULLEY - Cable, emergency dump	2	
-15	80122-18	A	WASHER - Pulley installation dump cable	4	
-16	14287-00	A	WASHER - Retainer dump cable attachment	1	

A - Used on PA-18A airplanes with serial numbers 18-3014 and up.

When ordering, always specify Part Number, Description and Serial Number of Aircraft

1E4
INTENTIONALLY LEFT BLANK

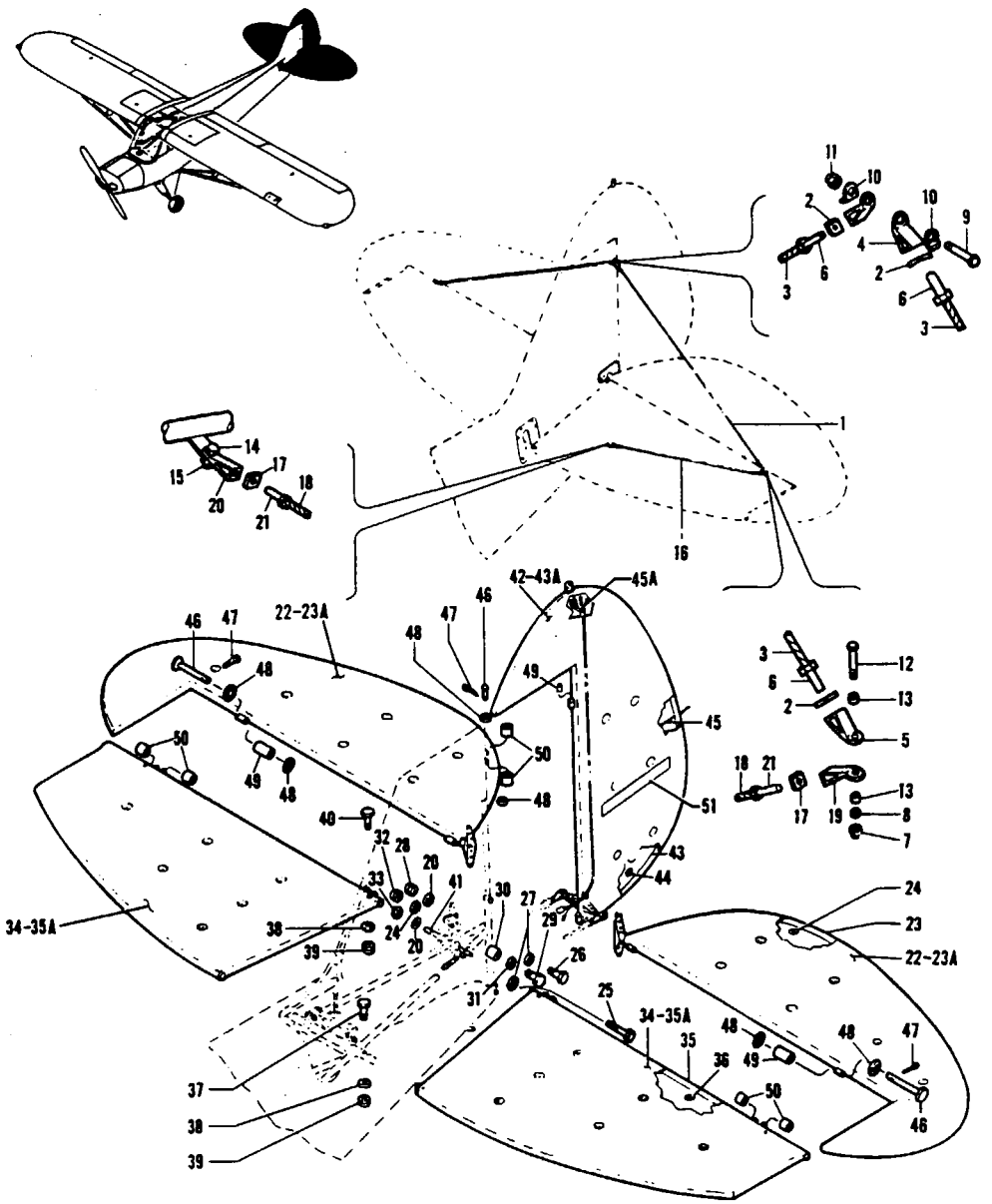

Figure 23. Tail Surface Installation

PIPER PARTS CATALOG

Figure and Index Number	Part Number	Code	NOMENCLATURE	No. Req.	SERIAL NUMBERS AFFECTED
23-	10918	B,C	DRAWING - Tail Surface Installation		
-1	10555-02		WIRE ASSEMBLY - Brace, upper	2	
-2	----- ---		* DELETED		
-3	41031-02		* WIRE	1	
-4	61341-06		* CLEVIS	1	
-5	61341-05		* CLEVIS	1	
-6	41051-00		* NIPPLE	2	
-7	406 681		NUT - (No. 22M02 elastic stop nut)	2	
-8	407 564		WASHER - (AN960-10)	2	
-9	401 315		BOLT - (AN4-15A)	1	
-10	40131-00		WASHER - Fin tail brace	2	
-11	406 682		NUT - (No. 42E028 elastic stop nut)	1	
-12	401 274		BOLT - (AN3-15A)	2	
-13	82732-72		BUSHING	4	18-687,18-692 and up
	80012-06	A	BUSHING	4	
-14	401 266		BOLT- (AN3-5A)	1	
-15	406 681		NUT - (No. 22M02 elastic stop nut)	2	
-16	10556-02		WIRE ASSEMBLY - Brace, lower	2	
-17	61342-00		* WASHER - Square	2	
-18	41031-03		* WIRE	1	
-19	61341-07		* CLEVIS	1	
-20	40531-00		* CLEVIS	1	
-21	----- --		* DELETED		
-22	12789-00		ELEVATOR ASSEMBLY - Fabric covered, “105”, “125”. “135” and “150”, LH	1	18-1 to 18-8919 inclusive
	12789-04		ELEVATOR ASSEMBLY - Ceconite covered, “150”, LH	1	18-8920 and up
	12789-01		ELEVATOR ASSEMBLY - Fabric covered, “105”, “125”. “135” and “150”, RH	1	18-1 to 18-8919 inclusive
	12789-05		ELEVATOR ASSEMBLY - Ceconite covered, “150”, RH	1	18-8920 and up
-23	12770-00		* ELEVATOR ASSEMBLY - Uncovered, “150”, “125”, “135” and “150”	1	
	40572-00		* ELEVATOR ASSEMBLY - Uncovered, “95”	1	
-23a	459 116		* ENVELOPE - Elevator assembly, ceconite	1	18-8920 and up
-24	80122-53		* GROMMET - (5 per elevator, “105”, “125” and “ 135”) (4 per elevator, “95”)	2	
-25	400 440		BOLT - (AN3-6A)	2	
-26	401 266		BOLT- (AN3-5A)	1	
-27	407 564		WASHER - (AN960-10)	4	
-28	406 681		NUT - (No. 22M02 elastic stop nut)	1	
-29	400 003		BOLT - (AN4-6A)	1	
-30	80012-17		BUSHING	1	
-31	407 565		WASHER - (AN960-416)	2	
-32	406 682		NUT - (No. 42E048 elastic stop nut)	1	
-33	404 100		NUT- (AN310-3)	1	

A - Used on PA-18 airplanes with serial numbers 18-1 to 18 S86 inclusive 18-688, 18-689, 18-690 and 18-661.
B - See latest revision of Piper Service Bulletin 966, for serial numbers 1809002, 1809004 to 1809011, 1809013 to 1809032, 1809034 to 1809038, 1809043 to 1809045, 1809047, 1809050 to 1809052.
C - See latest revision of Piper Service Letter 183A.

When ordering, always specify Part Number, Description, and Serial Number of Aircraft

PIPER PARTS CATALOG

Figure and Index Number	Part Number	Code	NOMENCLATURE	No. Req.	SERIAL NUMBERS AFFECTED
23-34	12790-00		STABILIZER ASSEMBLY - Fabric covered, "105", "125", "135" and "150", LH	1	18-1 to 18-8919 inclusive
	12790-04		STABILIZER ASSEMBLY - Ceconite covered, "150", LH	1	18-8920 and up
	12790-01		STABILIZER ASSEMBLY - Fabric covered, "105", "125", "135" and "150", RH	1	18-1 to 18-8919 inclusive
	12790-05		STABILIZER ASSEMBLY - Ceconite covered, "150", RH	1	18-8920 and up
	41652-00		STABILIZER ASSEMBLY - Fabric covered, "95", LH	1	
	41652-01		STABILIZER ASSEMBLY - Fabric covered, "95", RH	1	
-35	12769-00		* STABILIZER ASSEMBLY - Uncovered, "105", "125", "135" and "150"	1	
	40643-00		* STABILIZER ASSEMBLY - Uncovered, "95"	1	
-35a	459 115		* ENVELOPE - Stabilizer assembly, ceconite	1	18-8920 and up
-36	80122-53		* GROMMET - Drain	8	
-37	400 444		BOLT - (AN-3-13A)	2	
-38	407 564		WASHER - (AN960-10)	4	
-39	406 681		NUT - (No. 22MO2 elastic stop nut)	4	
-40	400 443		BOLT - (AN3-12A)	2	
-41	86062-79		TUBE - Liner, rear	1	
-42	12573-00		RUDDER ASSEMBLY - Fabric covered	1	18-1 to 18-8919 inclusive
	12573-02		RUDDER ASSEMBLY - Ceconite covered	1	18-8920 and up
	12573-03	A	RUDDER ASSEMBLY - Ceconite covered	1	18- 75090123 and up
-43	40622-07		* RUDDER - Uncovered	1	
	15726-02	A	* RUDDER - Uncovered	1	18-7509123 and up
-43a	459 114		* ENVELOPE - Rudder assembly, ceconite	1	
-44	80122-53		* GROMMET - Drain (.75 O.D., .25 I.D.)	1	
	85012-106		* WASHER - Drain (1.25 O.D., .44 I.D.)	1	
-45	12177-39		* WIRE ASSEMBLY - Tail light	1	
-45a	15727-02	A	* HARNESS ASSEMBLY - Strobe light	1	18-7509123 and up
-46	424 224		PIN - Hinge (AN394-55)	6	
-47	424 051		PIN - Cotter (AN380-2-2)	6	
-48	80122-86		WASHER	12	
-49	80022-44		BUSHING - Bronze, long	6	
-50	80022-45		BUSHING - Bronze, short	12	
-51	55549-02		DECAL - "Piper"	2	18-7709001 to 18-7709198 incl.

A - Used if strobe light is installed.

When ordering, always specify Part Number, Description and Serial Number of Aircraft

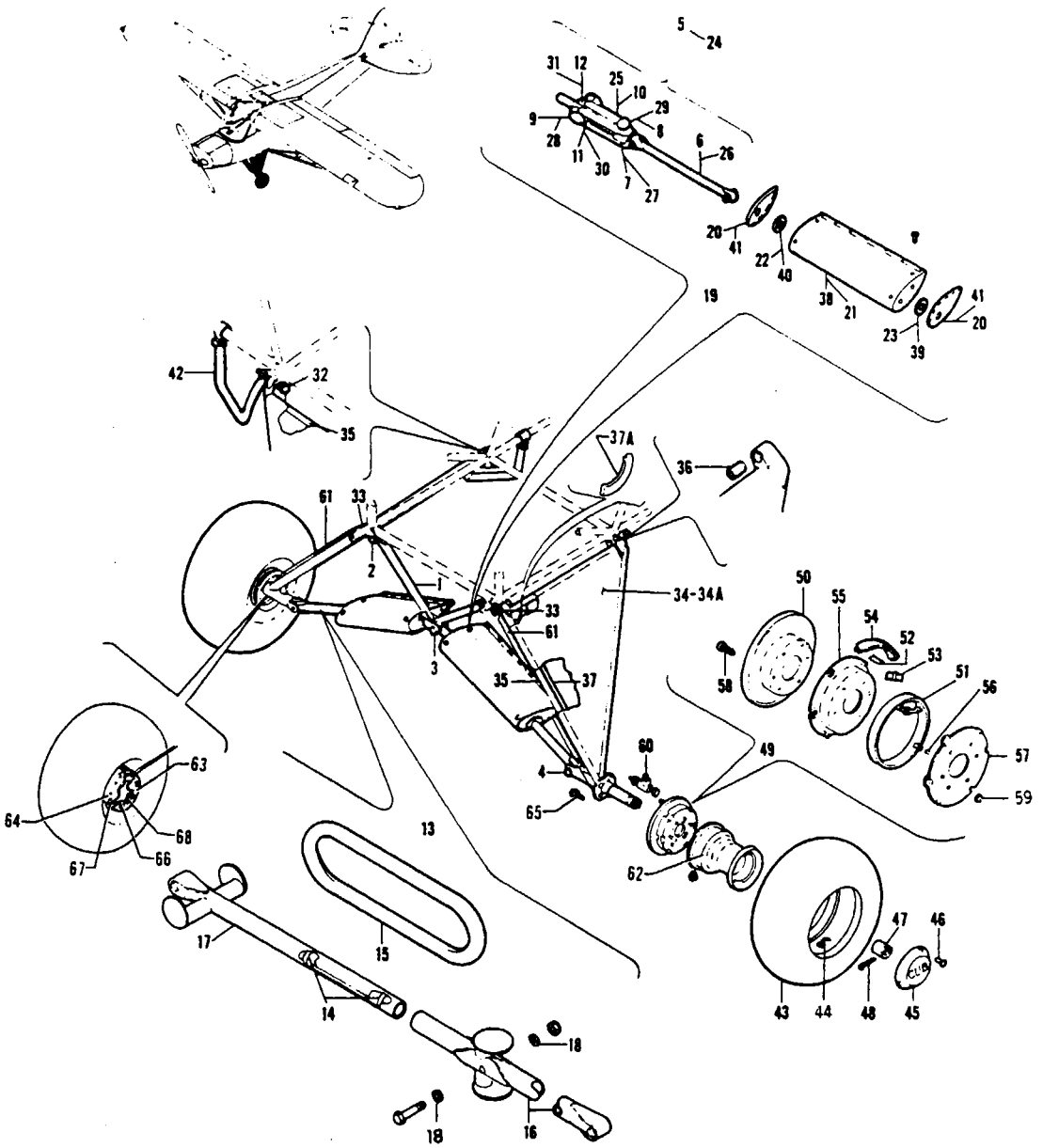

Figure 24. Landing Gear Installation

PIPER PARTS CATALOG

Figure and Index Number	Part Number	Code	NOMENCLATURE	No. Req.	SERIAL NUMBERS AFFECTED
24-	10534	A,G	DRAWING - Landing Gear Installation		
			DRAWING - No. 14390, Model 89-2000 floats (Secure from Edo Aircraft Corporation) “125 “, “135” and “150”		(PA-18 only) 18-549 and up
		F	DRAWING - 92-S-218, Model 92-1400 floats (Secure from Edo Aircraft Corporation) “105”. “125” and “135”		
	12554	F	DRAWING - Seaplane, “105”, “125” and “135”		
	14185	B	DRAWING - Power Plant Modification for EDO Model No. 89-2000 floats, “125”		18-549 to 18-1969 inclusive
	13253		DRAWING - Complete Airplane (Seaplane)		(PA-18A only) 18-1215 to 18-3770. 18-3772 to 18-3785 inclusive
	14479		DRAWING - Landing Gear Installation		18-3371, 18-3781 and up
	14512		DRAWING - Float Installation (89-2000 Edo Floats) “135” and “150”		18-3771, 18-3781 and up
-1	30602-06	A	VEE ASSEMBLY - Cabane	1	
	30602-11	C,D	VEE ASSEMBLY - Cabane	1	
	30602-10		VEE ASSEMBLY - Cabane	1	(PA-18A only) 18-5295 and up
-2	401 318	A	BOLT - (AN4-20A)	2	
	407 566		WASHER - (AN960-516)	2	
	404 889		NUT - (MS20365-524C)	2	
	401 359		BOLT- (AN5-20A)	2	
	407 586		WASHER - (AN960-516L)	AR	
-3	400 212		BOLT - (AN6-17) See item 4 for washer, nut and pin	2	
-4	400 213		BOLT - (AN6-20)	2	
	407 567		WASHER - (AN960-616)	4	
	404 103		NUT- (AN310-6)	2	
	424 059		PIN - Cotter (MS24665-283)	2	
-5	12998-00	E	STRUT ASSEMBLY - Shock complete (Hydrasorb unit)	2	

A - Used on airplanes with serial numbers 18-1 to 18-3770 inclusive, 18-3772 to 18-3780 inclusive.
B - Used when Model 89-2000 floats installed on PA-18 and PA-18A airplanes Model “125” only.
C - Used on PA-18 airplanes with serial numbers 18-3771, 18-3781 and up
D - Used on PA-18A airplanes with serial numbers 18-3771, 18-3786 to 18-5294 inclusive.
E - Optional equipment on all PA-18 airplanes and on all PA-18A standard airplanes up to 18-3013 and on PA-18A restricted category airplanes up to and including serial numbers 18-2186. Standard equipment on PA-18 “95” models with serial numbers 18-3014 and up.
F - Used on PA-18 airplanes with serial numbers 18-1 to 18 3770 inclusive, 18-3772 to 18-3780 inclusive.
G - See latest revision of Piper Service Bulletin 1172 for serial numbers 18-3771, 18-3781 to 18-9015, 18-7309016 to 18-8309025, 18-677, 18-770, 18-1262 to 18-3779, 18-3786 to 18-9015.

Figure and Index Number	Part Number	Code	NOMENCLATURE	No. Req.	SERIAL NUMBERS AFFECTED
24-6	12844-03	A	STRUT ASSEMBLY - Shock, long	1	
-7	487 558		STRUT ASSEMBLY - Shock, short (Hydrasorb unit)	1	
-8	12875-00		FITTING ASSEMBLY - Shock strut, lower end	1	
-9	12845-00		FITTING ASSEMBLY - Shock strut, upper end	1	
-10	31322-06	B	RING - Shock cord (451 352) 5/8"	2	
-11	85012-57		WASHER - Bumper, upper	1	
-12	480 691		PIN	1	
-13	10536-02	CD	STRUT ASSEMBLY - Shock, complete (used when hydrasorb unit not installed)	2	
-14	81232-30	CD	BUMPER - Leather	2	
-15	31322-05	CD	RING - Shock cord	2	
-16	10537-02	CD	STRUT ASSEMBLY - Shock, long	1	
-17	31392-00	CD	STRUT ASSEMBLY - Shock, short	1	
-18	80122-16	CD	WASHER - Strut attachment, long to short	3	
-19	14088-00	E	STRUT ASSEMBLY - Shock, complete (Hydrasorb unit) "135"	2	
	14088-02		STRUT ASSEMBLY - Shock, complete (Hydrasorb unit) "135" and "150"	2	18-3014 and up
-20	14093-00	F	PLATE - End, shock cord cover, "135" and "150"	2	
-21	14094-00	F	COVER - Shock cord, "135" and "150"	1	
-22	434 142		GROMMET - Upper (AN931-14-20)	1	
-23	434 144		GROMMET - Lower (AN931-16-22)	1	

A - Optional equipment on all PA-18 and PA-18A standard airplanes up to and including serial numbers 18-3013. Standard equipment on all PA-18A (restricted category) airplanes with serial numbers 18-2187 to 18-3013 inclusive and on all model PA-18 "95" airplanes with serial numbers 18-3014 and up.

B - Optional equipment on all PA-18 airplanes and on all PA-18A standard airplanes up to and including serial numbers 18-3013 and PA-18A restricted category airplanes up to and including serial numbers 18-2186 inclusive. Standard equipment on PA-18 "95" models with serial numbers 18-3014 and up.

C - Hydrasorb shock strut No. 14088-00 is standard equipment on all PA-18A restricted category airplanes with serial numbers 18-2187 to 18-3013 inclusive.

D - Used on airplanes with serial numbers 18-1 to 18-3013 inclusive.

E - Used on all PA-18A restricted category airplanes with serial numbers 18-2187 to 18-3013 inclusive.

F - Used on PA-18A restricted airplanes with serial numbers 18-2187 and up and on PA-18 and PA-18A standard airplanes with serial numbers 18-3014 and up.

PIPER PARTS CATALOG

Figure and Index Number	Part Number	Code	NOMENCLATURE	No. Req.	SERIAL NUMBERS AFFECTED
24-24	12998-02	A	STRUT ASSEMBLY - Shock, "135"	1	
	12998-03		STRUT ASSEMBLY - Shock, "135" and "150"	2	18-3014 and up
-25	31322-05	B	RING - Shock cord, 3/4", "135" and "150"	2	
-26	12844-03	C,D	STRUT ASSEMBLY - Shock, long	1	
	12844-04		STRUT ASSEMBLY - Shock, Long, "135" and "150"	1	18-3014 and up
-27	487 558		STRUT ASSEMBLY - Shock, Short (Hydrasorb unit)	1	
-28	12845-00		FITTING ASSEMBLY - Shock strut end, upper	1	
-29	12875-00		FITTING ASSEMBLY - Shock strut end, lower	1	
-30	85012-57		WASHER - Bumper, upper	1	
-31	480 691		PIN	1	
-32	400 220		BOLT - (AN6-27) RH	1	
	407 567		WASHER - (AN960-616)	2	
	407 587		WASHER - (AN960-616L)	AR	
	404 890		NUT - (MS20365-624C)	1	
-33	400 219		BOLT - (AN6-26)	3	
	407 567		WASHER - (AN960-616)	3	
	407 587		WASHER - (AN960-616L)	AR	
	404 890		NUT - (MS20365-624C)	3	
-34	10032-06		GEAR ASSEMBLY - Landing, fabric covered, LH	1	18-1 to 18-8919 inclusive
	10032-08		GEAR ASSEMBLY - Landing, ceconite covered, LH	1	18-8920 and up
	10032-05		GEAR ASSEMBLY - Landing, fabric covered, RH	1	18-1 to 18-8919 inclusive
	10032-07		GEAR ASSEMBLY - Landing, ceconite covered, RH	1	18-8920 and up
-34a	459 113		ENVELOPE - Landing gear assembly, ceconite	1	18-8920 and up
-35	10033-06		GEAR ASSEMBLY - Landing, uncovered, LH	1	
	10033-05		GEAR ASSEMBLY - Landing, uncovered, RH	1	
-36	80022-63		BUSHING - Insert	2	
-37	10034-00		LINE ASSEMBLY - Brake	1	
-37a	10748-00		GROMMET - Landing Gear Vee	1	
-38	10566-00	C	COVER ASSEMBLY - Shock cord (used when hydrasorb unit is not installed)	2	
	10566-05	E	COVER ASSEMBLY - Shock cord (used with hydrasorb unit)	2	

A - Used on all PA-18A restricted category airplanes with serial numbers 18-2187 to 18-3013 inclusive.

B - Used on PA-18A restricted airplanes with serial numbers 18-2187 and up. Also used on PA-18 and PA-18A standard airplanes with serial numbers 18-3014 and up.

C - Used on PA-18 airplanes with serial numbers 18-1 and up. Also used on PA-18A airplanes with serial numbers 18-1215 to 18-3013 inclusive.

D - Optional equipment on PA-18 and PA-18A standard airplanes with serial numbers 18-1 to 18-3013 inclusive. Standard equipment on all PA-18A restricted airplanes with serial numbers 18-2187 to 18-3013 inclusive. Used on PA-18 "95" airplanes with serial numbers 18-3014 and up.

E - Optional equipment on all PA-18 airplanes and on all PA-18A standard airplanes with serial numbers 18-1 to 18-3013 inclusive and on PA-18A restricted category airplanes up to and including serial numbers 18-2186. Standard equipment on PA-18 "95" airplanes with serial numbers 18-3014 and up.

When ordering, always specify Part Number, Description and Serial Number of Aircraft

PIPER PARTS CATALOG

Figure and Index Number	Part Number	Code	NOMENCLATURE	No. Req.	SERIAL NUMBERS AFFECTED
24-39	434 144		GROMMET - Rubber (AN931-16-22) lower	2	
-40	434 142		GROMMET - Rubber (AN931-14-20) upper	2	
-41	10567-00	A	PLATE - End, shock cord cover	4	
-42	81903-03		STEP ASSEMBLY - Landing gear	1	
-43	451 722		TIRE - (8.00 x 4,4 ply) McCreary	2	18-1 to 18-7609136 inclusive
	761 970	D,E	TIRE - (6.00 x 6, 4 ply) B. F. Goodrich	2	18-7609137 and up
	761 994	D,E	TIRE - (6.00 x 6, 4 ply) McCreary Airhawk	2	18-7609137 and up
	762 032	D,E	TIRE - (6.00 x 6, 4 ply) Goodyear Flight Custom II	2	18-7609137 and up
	761 971	D,E	TIRE - (7.00 x 6, 6 ply) B. F. Goodrich	2	18-7609137 and up
	761 999	D,E	TIRE - (7.00 x 6, 6 ply) McCreary Airhawk	2	18-7609137 and up
	762 037	D,E	TIRE - (7.00 x 6, 6 ply) Goodyear Flight Custom II	2	18-7609137 and up
	451 721	D,E	TIRE - (8.00 x 6, 4 ply)	2	18-7609137 and up
-44	451 740		TUBE - 8.00 x 4	2	18-1 to 18-7609136 inclusive
	451 735	D,E	TUBE - 6.00 x 6	2	18-7609137 and up
	451 736	D,E	TUBE - 7.00 x 6	2	18-7609137 and up
	451 741	D,E	TUBE - 8.00 x 6	2	18-7609137 and up
-45	31702-00		CAP - Hub	2	18-1 to 18-7609136 inclusive
	24918-00	D,E	COVER - Wheel	2	18-7609137 and up
-46	415 772		SCREW - 10-24 x 3/8" long (AN515-10-6)	6	18-1 to 18-7609136 inclusive
	415 531	D,E	SCREW - (MS35206-241)	6	18-7609137 and up
	407 120	D,E	WASHER - Lock (AN936-B8)	6	18-7609137 and up
-47	30491-00		NUT - Axle	2	
-48	424 065		PIN - Axle nut	2	
-49	451 702		BRAKE SHOE ASSEMBLY - (B. F. Goodrich D-2-113)	2	18-1 to 18-7609136 inclusive
-50	750 035		* FAIRING - Dust cover	1	18-1 to 18-7609136 inclusive
-51	750 031		* TUBE ASSEMBLY - Expander rubber	1	18-1 to 18-7609136 inclusive
-52	750 029		* SPRING - Retracting	6	18-1 to 18-7609136 inclusive
-53	750 893		* SHIELD - Tube protector	6	18-1 to 18-7609136 inclusive
-54	750 033		* BLOCK - Brake	6	18-1 to 18-7609136 inclusive
-55	750 039		* FRAME - Brake	1	18-1 to 18-7609136 inclusive
-56	750 016		* SPACER - Nozzle	1	18-1 to 18-7609136 inclusive
-57	750 041		* FLANGE - Brake frame	1	18-1 to 18-7609136 inclusive
-58	750 005		* SCREW - Fillister head, No. 10-32 x 3/8" long	6	18-1 to 18-7609136 inclusive
-59	406 681		* NUT - Stop, No. 10-32	6	18-1 to 18-7609136 inclusive
-60	451 711		FITTING - Brake bleeder	2	18-1 to 18-7609136 inclusive
-61	13674-00	B	DEFLECTOR ASSEMBLY - Wire	2	(PA-18A only) 18-1215 and up
-62	451 760	F	WHEEL AND BRAKE DRUM ASSEMBLY - (D-3-13-A-1)	2	18-1 to 18-7609136 inclusive
-63	551 771	E,G	WHEEL ASSEMBLY - (40-60) Cleveland	2	18-76090137 and up
-64	551 727	C,E	BRAKE ASSEMBLY - (30-60) Cleveland	2	18-7609137 and up
-65	400 002		BOLT - (AN4-5A)	8	
	404 888		NUT - (MS20365-428C)	8	

A - Used on PA-18 airplanes and PA-18A standard airplanes with serial numbers 18-1 to 18-3013 inclusive and PA-18A restricted category airplanes up to and including serial numbers 18-2186. Also used on PA-18 "95" airplanes only with serial numbers 18-3014 and up.

B - Used on both duster and sprayer installation.

C - See Figure 25A for component parts.

D - Used when Cleveland brakes 30-60 are installed.

E - Also used on PA-18-150 and PA-18A-150 airplanes with serial numbers 18-3771, 18-3781 to 18-7609136 inclusive if brake and wheel coversion kit has been installed.

F - See Figure 25 component parts.

G - See Figure 25B for component parts.

When ordering, always specify Part Number, Description and Serial Number of Aircraft

PIPER PARTS CATALOG

Figure and Index Number	Part Number	Code	NOMENCLATURE	No. Req.	SERIAL NUMBERS AFFECTED
24-66	60703-02	A	LINE ASSEMBLY - Brake	2	18-7609137 and up
-67	460 677	A	ELBOW - (400 x 4)	2	18-7609137 and up
-68	558 819	A	ELBOW - (502 x 4)	2	18-7609137 and up

A - Also used on PA-18-150 and PA-18A-150 airplanes with serial numbers 18-3771, 18-3781 to 18-7609136 inclusive if brake and wheel conversion kit has been installed.

PIPER PARTS CATALOG

Figure and Index Number	Part Number	Code	NOMENCLATURE	No. Req.	SERIAL NUMBERS AFFECTED
25-1	461 760		WHEEL AND BRAKE DRUM ASSEMBLY - (Hayes Industries D-3-13-A-11	2	18-1 to 18-7609136 inclusive
-2	750 025		LOCK RING - Side	1	
-3	760 026		LOCK RING - Felt retainer	2	
-4	760 010		FELT - Retainer	4	
-6	760 066		FELT - Grease retaining	2	
-6	758 733		CONE - Bearing (214-00400C26C)	2	
-7	760 064		CUP - Bearing	2	
-8	760 006		PIN - Anchor	1	
-9	760 028		CASTING - Side	1	
-10	760 896		RIVET - Brake drum	6	
-11	760 894		DRUM - Brake	1	

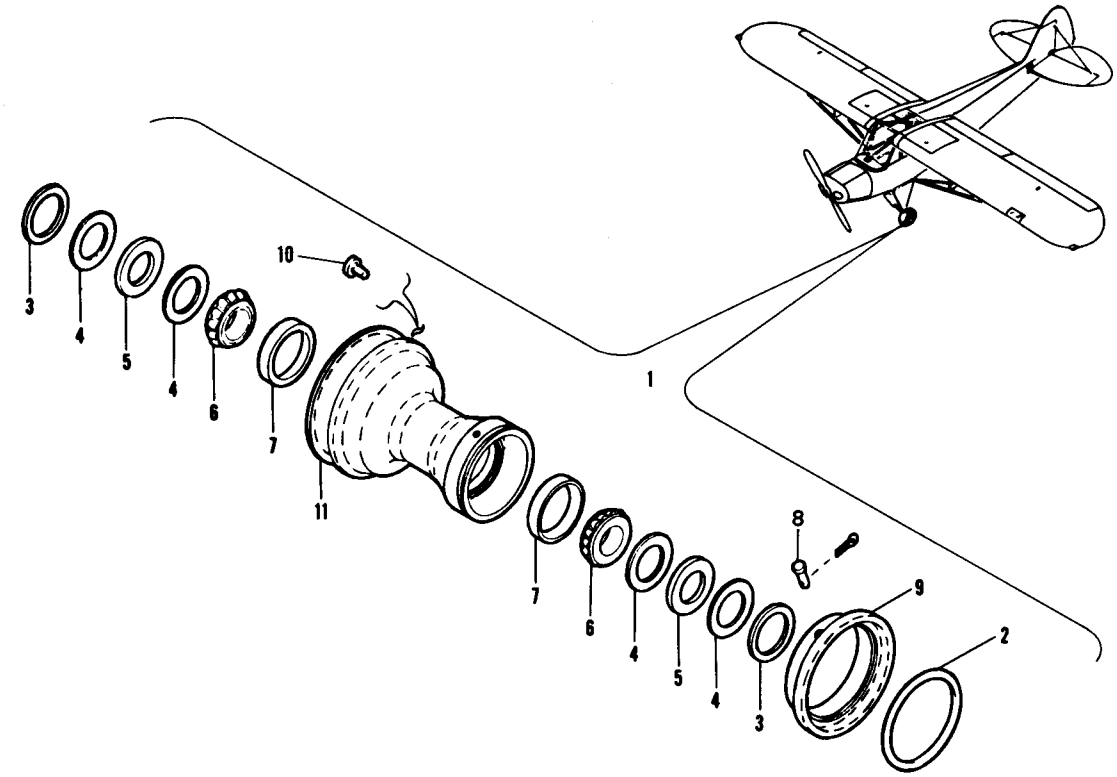

Figure 25. Wheel and Brake Drum Assembly (Hayes Industries)

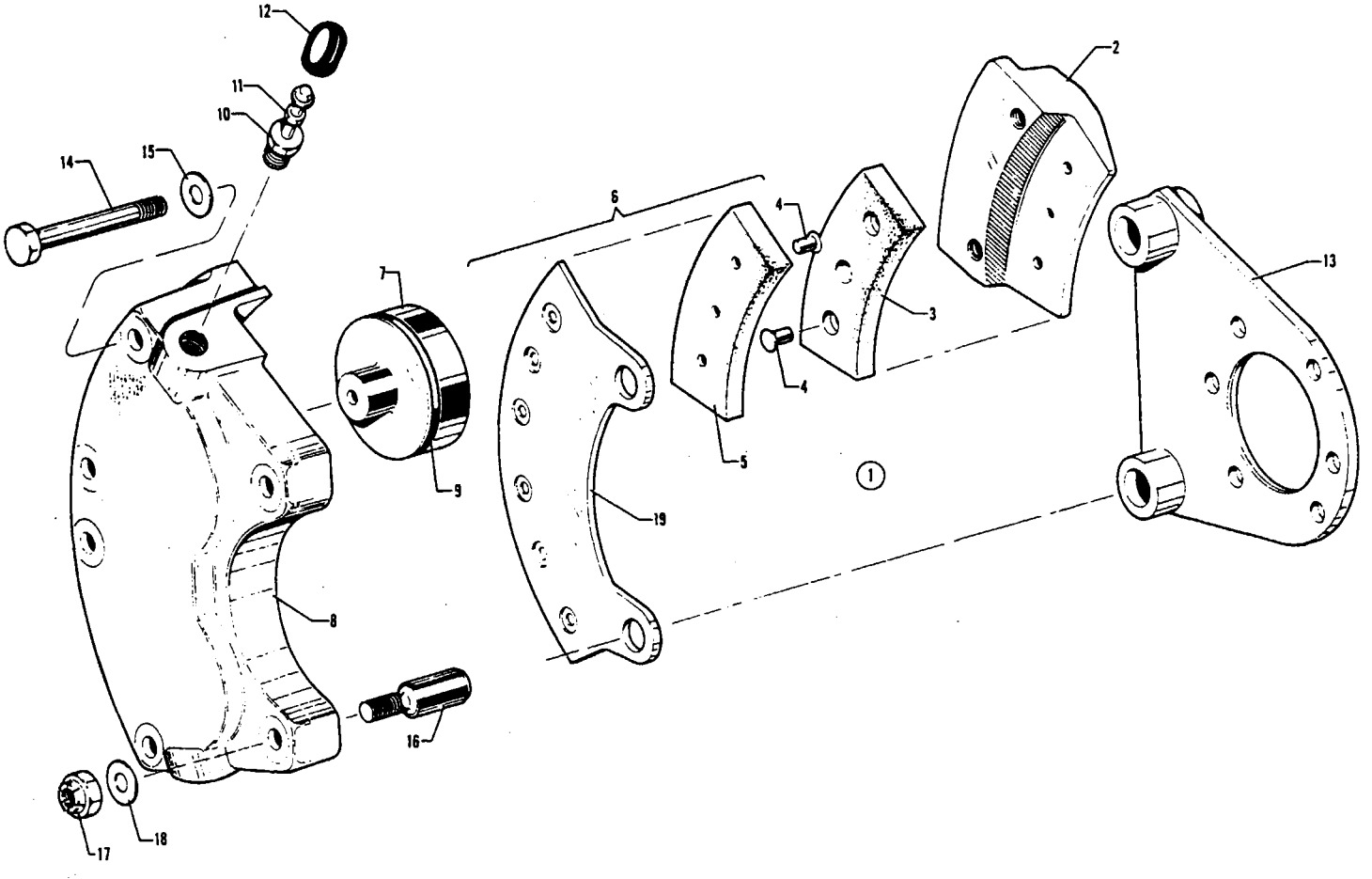

Figure 25A. Brake Assembly (Cleveland)

PIPER PARTS CATALOG

Figure and Index Number	Part Number	Code	NOMENCLATURE	No. Req.	SERIAL NUMBERS AFFECTED
25A-1	551 727	A	BRAKE ASSEMBLY - (Cleveland 30-60)	2	18-7609137 and up
-2	752 749		PLATE - Back (64-5)	2	
-3	761 202		LINING - Back plate (66-56)	2	
-4	752 826		RIVET - Brake lining (561)	12	
-5	761 203		LINING - Pressure plate (66-57)	1	
-6	757 488		PLATE ASSEMBLY - Pressure (73-41)	1	
-7	757 491		PISTON - Cylinder (62-6)	2	
-8	758 095		CYLINDER - Brake (61-67)	1	
-9	484 698		PACKING - "O" ring (AN6227-27)	2	
-10	752 966		SEAT - Bleeder (81-1)	1	
-11	752 965		SCREW - Bleeder (79-3)	1	
-12	753 850		CAP - Bleeder (183-1)	1	
-13	757 489		PLATE ASSEMBLY - Torque (75-125)	1	
-14	751 450		BOLT - (AN4H-15A)	4	
-15	407 585		WASHER - (AN960-416L)	4	
-16	751 402		BOLT - Anchor (69-2)	2	
-17	404 838		NUT - Anchor bolt (AN364-624)	2	
-18	407 587		WASHER - Anchor bolt (AN960-616L)	2	
-19	755 830		PLATE - Pressure (63-6)	1	

A - Also used on PA-18-150 and PA-18A-150 airplanes with serial numbers 18-3771, 18-3781 to 18-7609136 inclusive, if brake and wheel conversion kit 761 081 has been installed.

When ordering, always specify Part Number, Description and Serial Number of Aircraft

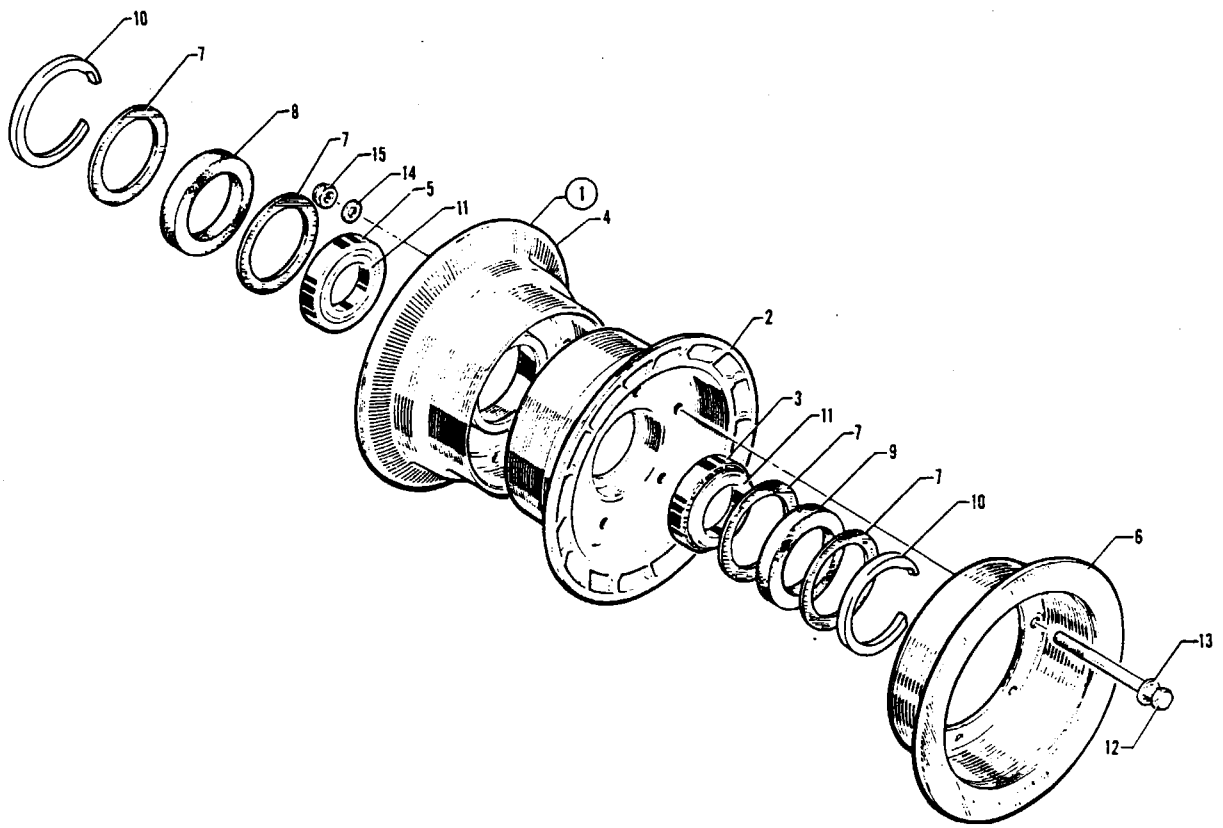

Figure 25B. Main Wheel Assembly (Cleveland)

PIPER PARTS CATALOG

Figure and Index Number	Part Number	Code	NOMENCLATURE	No. Req.	SERIAL NUMBERS AFFECTED
25B-1	551 771	A	WHEEL ASSEMBLY - (Cleveland 40-60)	2	18-7609137 and up
-2	756 681		* WHEEL HALF ASSEMBLY - Inner (161-70)	1	
-3	757 831	V	* * CUP - Bearing (08231)	1	
-4	756 682		* WHEEL HALF ASSEMBLY - Outer (162-65)	1	
-5	757 831	V	* * CUP - Bearing (08231)	1	
-6	754 615		* DISC ASSEMBLY - Brake (164-67)	1	
-7	762 534		* RING - Grease seal (153-2)	4	
-8	754 849		* FELT - Grease seal, outer wheel (154-2)	1	
-9	754 850		* FELT - Grease seal, inner wheel (154-28)	1	
-10	756 008	V	* RING - Snap (155-2)	2	
-11	758 733		* BEARING - Cone (214-00400C26C)	2	
-12	401 334		* BOLT- (AN4-36A)	6	
-13	407 585		* WASHER - (AN960-416L)	6	
-14	407 565		* WASHER - (AN960-416)	6	
-15	404 888		* NUT - (AN365-428)	6	

A - Also used on PA-18-150 and PA-18A 150 airplanes with serial numbers 18- 3771, 18- 3781 to 18-7609136 inclusive, if brake and wheel conversion kit 761 081 has been installed.

V - These parts must be ordered from Service Spares Department, Piper Aircraft Corporation, Vero Beach, Florida

When ordering, always specify Part Number, Description, and Serial Number of Aircraft

PIPER PARTS CATALOG

Figure and Index Number	Part Number	Code	NOMENCLATURE	No. Req.	SERIAL NUMBERS AFFECTED
26-	12671		DRAWING - Wheel Fender Installation		18-1 to 18-7871 inclusive
-1	750 954		FENDER SETS	1	
	12516-00		* FENDER - LH	1	
	12516-01		* FENDER - RH	1	
	751 375		FENDER BRACKET SETS - (Used when landing gear is equipped with bracket stop)	1	
-2	12904-00		* BRACKET - (Used when landing gear is equipped with bracket stop) LH	1	
	12904-01		* BRACKET - (Used when landing gear is equipped with bracket stop) RH	1	
-3	12572-00		* TUBE ASSEMBLY - Fender axle	2	
	750 957		FENDER BRACKET SETS - (Used when landing gear is not equipped with bracket stop)	1	18-1 to 18-548 inclusive
-4	12572-00		TUBE ASSEMBLY - Fender axle	2	
-5	12568-00		* BRACKET - (Used when landing gear is not equipped with bracket stop) LH	1	18-1 to 18-548 inclusive
	12568-01		* BRACKET - (Used when landing gear is not equipped with bracket stop) RH	1	18-1 to 18-548 inclusive

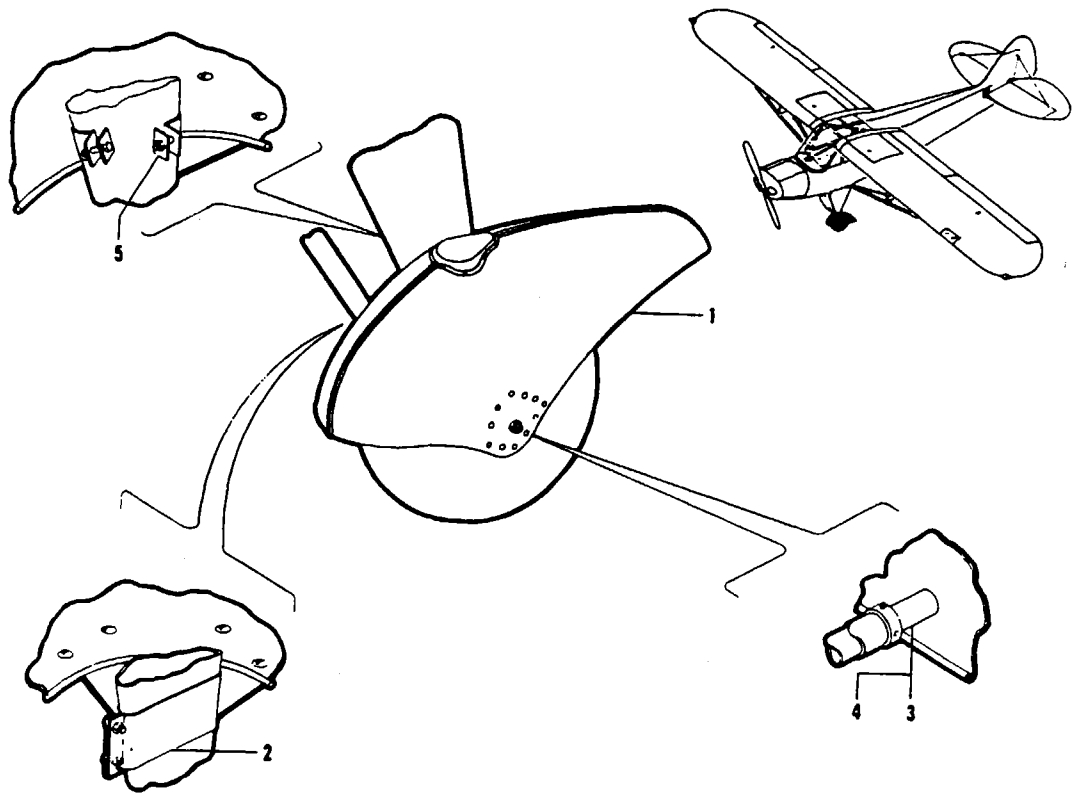

Figure 26. Wheel Fender Installation

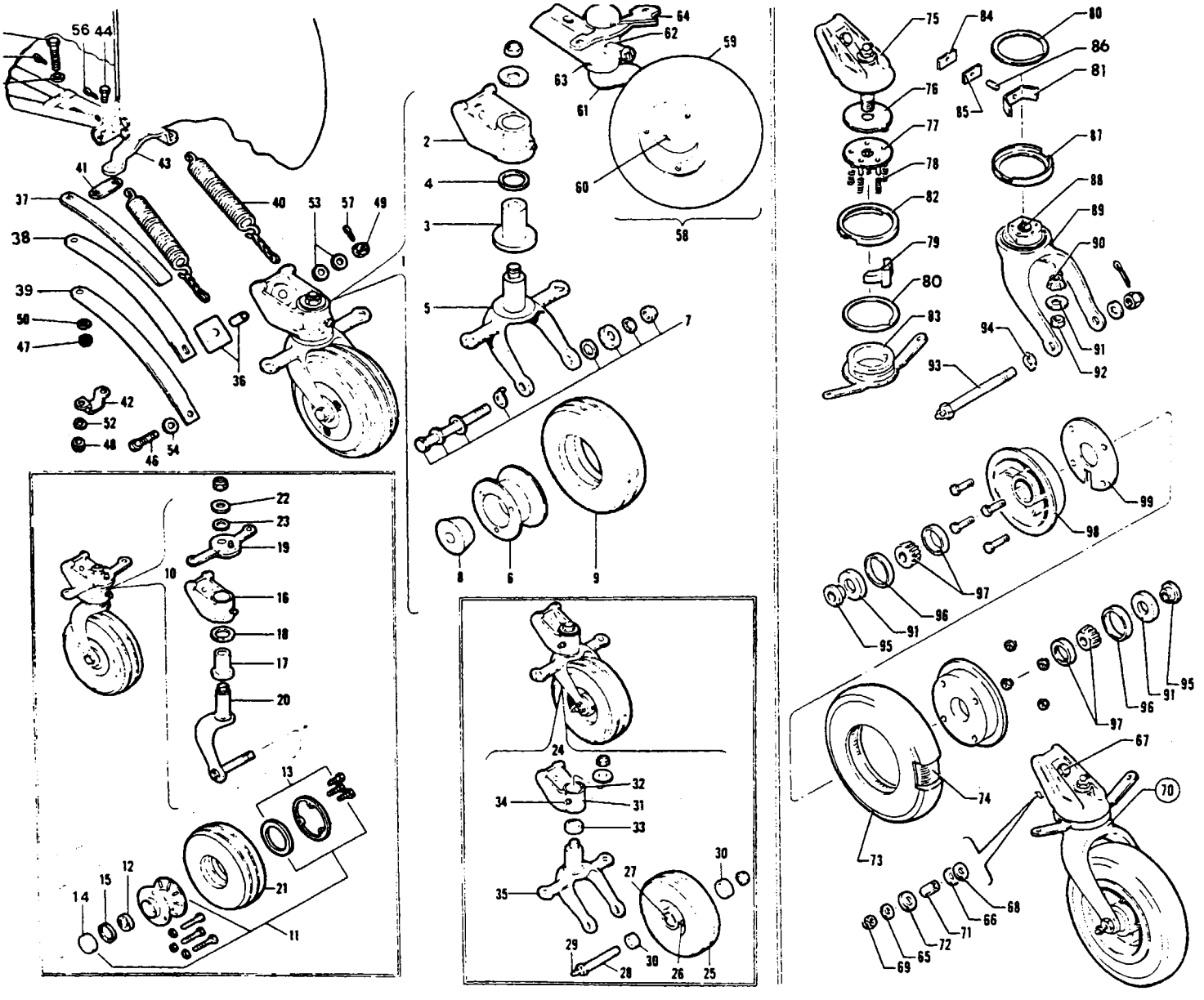

Figure 27. Tail Wheel Installation

PIPER PARTS CATALOG

Figure and Index Number	Part Number	Code	NOMENCLATURE	No. Req.	SERIAL NUMBERS AFFECTED
			TAIL WHEEL SPECIAL NOTE		
			When ordering replacement tail wheels or their component parts for domestic PA-18 airplanes, PA-18A airplanes and export PA-18 airplanes, be sure and check the number on the tail wheel nameplate for positive parts identification. This number is the same as appears after the nomenclature of the tail wheel assemblies listed in this parts book. The Maule tail wheel is identified by the word Maule stamped on the tire.		
27-	10030	A	DRAWING - Tail Wheel Installation		
	13759		DRAWING - Tail Wheel Installation		18-1215 and up
-1	451 602	B	TAIL WHEEL ASSEMBLY - (Scott Model No. 3000A-1) (steerable)	1	
-2	750 635		* BRACKET	1	
-3	750 722		* * BUSHING - (Scott)	1	
-4	750 898		* * CAP - Bushing	1	
-5	750 636		* FORK	1	
-6	750 369		* HUB ASSEMBLY	1	
-7	750 367		* AXLE ASSEMBLY - (With grease fittings and hub caps)	1	
-8	750 345		* BEARING	2	
-9	750 372		* TIRE - (6.00 x 2)	1	
-10	451 610	C	TAIL WHEEL ASSEMBLY - (Scott Model No. 3-24-B) (Full swivel)	1	
-11	750 752		* WHEEL ASSEMBLY - Less tire	1	
-12	750 746		* * BEARING	2	
-13	750 638		* * CAP - Hub	1	
-14	750 749		* * RETAINER - Grease	1	
-15	750 750		* * SPACER - Grease retainer	1	
-16	750 635		* BRACKET ASSEMBLY - Tail wheel spring	1	
-17	750 722		* * BUSHING - Bronze	1	
-18	750 898		* * CAP - Bushing	1	
			A - Used on PA-18 airplanes with serial numbers 18-1 to 18-1214 inclusive.		
			B - Used on Export PA-18 airplanes up to and including serial numbers 18-3013. See Tail Wheel Special Note before ordering this tail wheel or its component parts for domestic PA-18 airplanes.		
			C - Used on all PA-18A airplanes up to and including serial numbers 18-3013. Also on Export PA-18 airplanes with serial numbers 18-1290 to 18-3013 inclusive. See Tail Wheel Special Note before ordering this tail wheel or its component parts for all domestic PA-18 airplanes; for Export PA-18 airplanes with serial numbers 18-3014 and up and for all PA-18 airplanes with serial numbers 18-3014 to 18-5433 inclusive.		

PIPER PARTS CATALOG

Figure and Index Number	Part Number	Code	NOMENCLATURE	No. Req.	SERIAL NUMBERS AFFECTED
27-19	750 744		* ARM ASSEMBLY - Tail wheel	1	
-20	750 748		* FORK ASSEMBLY - Tail wheel	1	
-21	750 372		* TIRE - (6.00 x 2)	1	
-22	750 751		* WASHER - Tail wheel arm attachment	1	
-23	750 637		* SHIM - Tail wheel arm attachment	1	
-24	451 601	A	TAIL WHEEL ASSEMBLY - (Scott Model No. 3-21) (steerable)	1	
-25	750 351		* WHEEL ASSEMBLY - (1418) Tire and hub assembly	1	
			NOTE: The tire and hub assembly are not available as separate items.		
-26	750 358		* FITTING - Grease (1425)	1	
-27	750 354		* BEARING ASSEMBLY - Ball (4121)	2	
-28	750 356		AXLE ASSEMBLY - (1423)	1	
-29	750 357		* FITTING - Grease (1424)	1	
-30	750 343		HUB CAP - (1364)	2	
-31	750 341		BRACKET ASSEMBLY - (1305)	1	
-32	750 345		* BEARING - (1395)	1	
-33	750 347		* BEARING - Thrust (1397)	1	
-34	750 357		* FITTING - Grease (1424)	1	
-35	750 350		FORK ASSEMBLY - (1417)	1	
-36	750 363	B	PACER SET - Tail wheel attachment	1	
-37	12567-04	C,K	SPRING - Tail wheel, short	1	
-38	12567-03	D	SPRING - Tail wheel, middle	1	
-39	12567-02	E	SPRING - Tail wheel, bottom	1	
-40	750 753	F	SPRING AND CONNECTOR ASSEMBLY - Tail wheel	1	
	751 475	G	SPRING AND CONNECTOR ASSEMBLY - Tail wheel	1	
-41	30541-02	H	PAD - Tail wheel clamp bolt	1	
-42	30531-00		LAMP - Spring attachment	1	18-1 to 18-1706 inclusive
	30531-02	J	LAMP - Spring attachment	1	

A - Used only on domestic PA-18 airplanes starting with serial numbers 18-2204. See Tail Wheel Special Note before ordering this tail wheel or its component parts.
B - Used when Scott 6” tail wheel #3000A-1 and #3-24B is installed.
C - Two (2) per ship used on all PA-18A airplanes and on PA-18 airplanes with serial numbers 18-1707 and up.
D - When Scott 8” or Maule 8” tail wheel is installed, use spring 10999-03.
E - When Scott 8” or Maule 8” tail wheel is installed. use spring 10999-05.
F - Used on PA-18A airplanes with serial numbers 18-1262 to 18-1666 inclusive, and on PA-18 airplanes with serial numbers 18-1 to 18-1677 inclusive.
G - Used on PA-18A airplanes with serial numbers 18-1667 and up, and PA-18 airplanes with serial numbers 18-1678 and up.
H - Used on airplanes with serial numbers 18-1 to 18-848 inclusive, 18-969 to 18-998 inclusive, 18-1027 to 18-1038 inclusive, 18-1040 to 18-1056 inclusive and 18-1058.
J - Used on all PA-18A airplanes and on PA-18 airplanes with serial numbers 18-1707 and up.
K - See latest revision of Piper Service Letter 189 for all PA-18A airplanes with serial numbers prior to serial number 18-1327.

Figure and Index Number	Part Number	Code	NOMENCLATURE	No. Req.	SERIAL NUMBERS AFFECTED
27-43	750 330		ARM ASSEMBLY - Rudder No. 1140	1	
-44	400 003		BOLT - (AN4-6A)	2	
-45	400 216	EF	BOLT - (AN6-23)	1	
	400 218	D	BOLT - (AN6-25)	1	18-1215 and up
-46	400 251		BOLT - (AN7-14)	1	
-47	404 103		NUT - (AN310-6)	1	
-48	404 101		NUT - (AN310-4)	2	
-49	404 104		NUT - (AN310-7)	1	
-50	407 567		WASHER - (AN960-616)	1	
-51	80122-41		WASHER	1	
-52	407 565		WASHER - (AN960-416)	2	
-53	407 568		WASHER - (AN960-716)	2	
-54	85012-48		WASHER	1	
-55	424 059		PIN - Cotter (AN380-3-3)	1	
-56	424 051		PIN - Cotter (AN380-2-2)	2	
-57	424 059		PIN - Cotter (AN380-3-3)	1	
-58	451 631	AB	TAIL WHEEL ASSEMBLY - 6" (SFS-1-4) (Maule)	1	
-59	753 133		WHEEL AND TIRE - Complete with bearings, felt, retainers and hub cap	1	
-60	751 227		AXLE	1	
-61	751 757		FORK	1	
-62	751 388		BRACKET ASSEMBLY - 1-1/4"	1	
-63	751 389		BEARING - Oilite	1	
-64	752 900		STEERING ARM ASSEMBLY	1	
-65	85012-48	C	WASHER	1	
-66	80122-30	C	WASHER	1	
-67	400 262	C	BOLT - (AN7-21)	1	
-68	407 568	C	WASHER - (AN960-716)	1	
-69	406 685	C	NUT - (#52E070)	1	
-70	753 127	AC	TAIL WHEEL ASSEMBLY - (Scott 8", #3200)	1	
-71	751 350		BUSHING - (#3241-2)	1	
-72	752 888		SPACER - (#3243-2)	1	
-73	752 982		TIRE	1	
-74	752 983		TUBE	1	
-75	753 403		BRACKET ASSEMBLY - (#3216)	1	
-76	753 207		WASHER - Thrust (#3207) Micarta	1	
-77	755 880		PLATE ASSEMBLY - Thrust (#3234)	1	
-78	756 205		SPRING - Compression (#3233)	5	
-79	755 878		PAWL - (#3219)	1	

A - See Tail Wheel Special Note before ordering this tail wheel or its component parts.
B - Used on PA-18 airplanes with serial numbers 18-3014 and up, and PA-18A airplanes with serial numbers 18-3014 to 18-5433 inclusive.
C - Used on PA-18A airplanes with serial numbers 18-5434 and up, and PA-18 with serial numbers 18-7509001 and up.
D - Used with four (4) tail wheel springs.
E - Used on PA-18 airplanes with serial numbers 18-1 to 18-1969 inclusive.
F - Used with three (3) tail wheel springs.

When ordering, always specify Part Number, Description and Serial Number of Aircraft

Figure and Index Number	Part Number	Code	NOMENCLATURE	No. Req.	SERIAL NUMBERS AFFECTED
27-80	753 208		WASHER - Thrust (#3206)	2	
-81	756 206		SPRING - (#3222)	1	
-82	753 914		DUST CAP - Top (#3235-2)	1	
-83	751 264		ARM ASSEMBLY - (#3214)	1	
-84	756 207		SPACER - (#3258-1)	1	
-85	756 208		SPACER - (#3258)	1	
-86	755 879		PIN - (#3257)	1	
-87	753 915		DUST CAP - Bottom (#3235-1)	1	
-88	753 404		BUSHING - (#3205)	1	
-89	751 806		FORK ASSEMBLY - (#3224)	1	
-90	753 405		BEARING - (#A4050)	1	
-91	750 749		RETAINER - Grease (#1863)	3	
-92	756 209		SPACER - (#2504-1)	1	
-93	751 265		AXLE ASSEMBLY - (#3236)	1	
-94	753 209		WASHER - Lock (#3225)	1	
-95	753 406		BUSHING - (#3227)	2	
-96	750 750		RETAINER - (#1862)	2	
-97	750 746		BEARING ASSEMBLY - (#1883)	2	
-98	751 964		HUB - (#2598)	2	
-99	756 210		SPACER - (#2602)	1	

PIPER PARTS CATALOG

Figure and Index Number	Part Number	Code	NOMENCLATURE	No. Req.	SERIAL NUMBERS AFFECTED
27A-1	451 608	A	TAIL WHEEL ASSEMBLY - (Maule SFS-14 P8G-8)	1	
-2	751 234		AXLE	1	
-3	751 780		FORK	1	
-4	751 389		BEARING - Oilite	1	
-5	752 900		ARM ASSEMBLY - Steering	1	
-6	752 982		TIRE	1	
-7	751 533		CAP - Hub	1	
-8	752 835		RING - Sirclip	1	
-9	753 002		TUBE	1	
-10	752 487		NUT - Axle	1	
-11	751 931		HUB - Inside (with bearing)	1	
-12	751 423		BEARING - Inside (1621)	1	
-13	751 424		BEARING - Oilite (SR381)	1	
-14	751 932		HUB - Outside	1	
-15	751 422		BOLT - Hub	3	
-16	753 165		LOCK WASHER	3	
-17	751 779		FELT	1	
-18	752 834		RETAINER - Felt	1	

A - When ordering replacement tail wheels or their component parts, be sure and check the number on the tail wheel nameplate for positive parts identification. This number is the same as appears after the nomenclature of the tail wheel assemblies listed in this parts book. The Maule tail wheel is identified by the word Maule stamped on the tire.

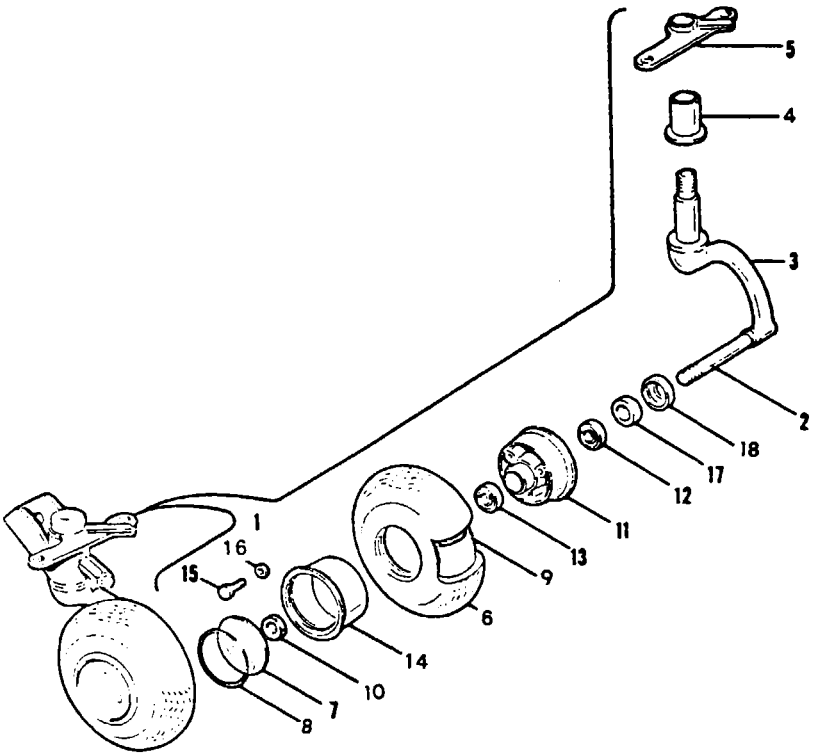

Figure 27A. Tail Wheel Installation

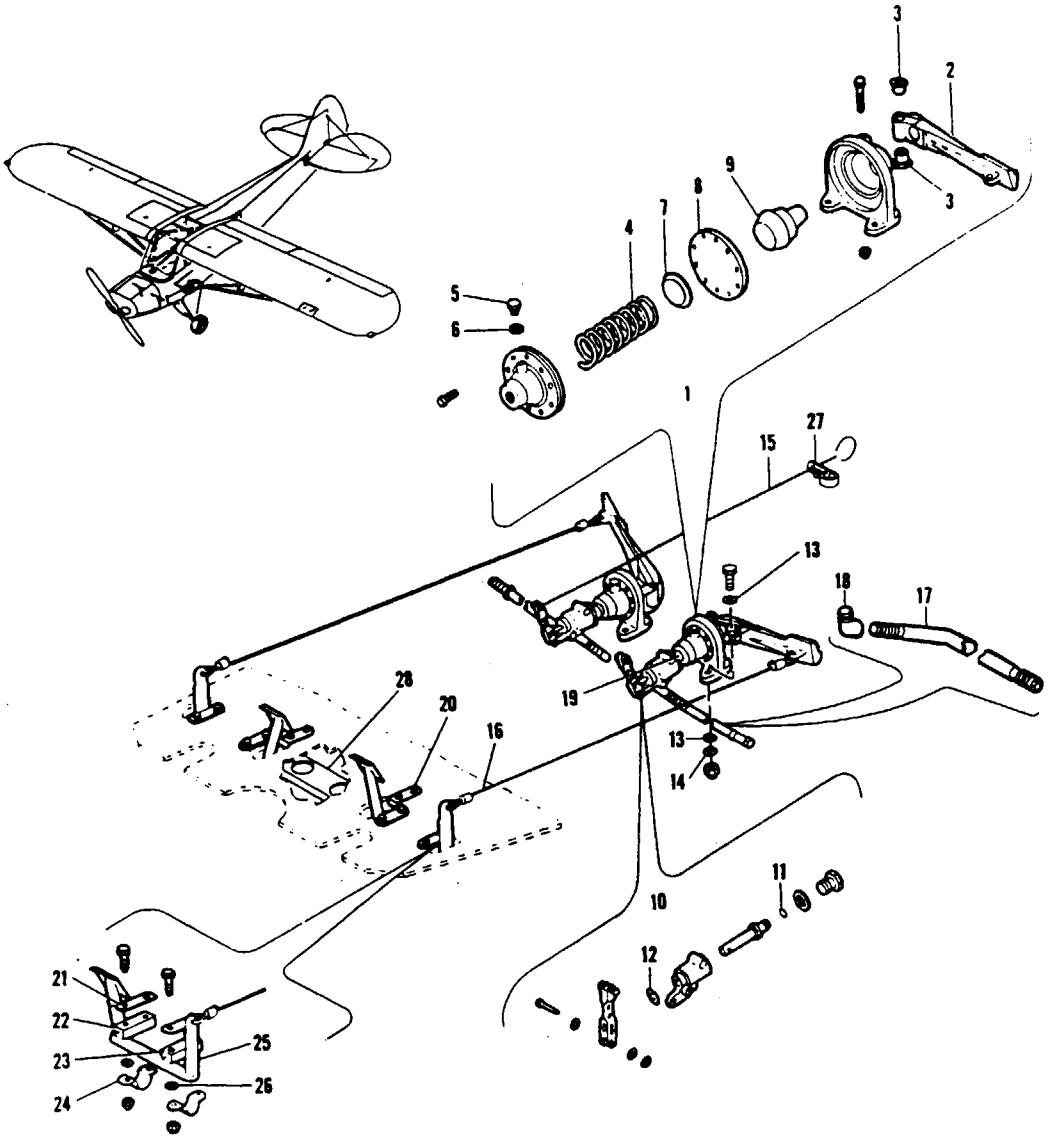

Figure 28. Brake Installation

Figure and Index Number	Part Number	Code	NOMENCLATURE	No. Req.	SERIAL NUMBERS AFFECTED
28-	12977		DRAWING - Parking Brake Installation		
	14569		DRAWING - Brake Installation		
-1	451 709		CYLINDER - Master brake, Scott, LH (was 451 700)	1	
	451 710		CYLINDER - Master brake, Scott, RH (was 451 701)	1	
-2	750 999		PEDAL - LH (with bushing)	1	
	750 998		PEDAL - RH (with bushing)	1	
-3	750 997		BUSHING	2	
-4	750 386		SPRING	1	
-5	750 387		SCREW - Vent (B-1258)	1	
-6	750 379		GASKET - Vent (B-1159)	1	
-7	752 688		PAD - Diaphragm (was 750 385)	1	
-8	750 384		DIAPHRAGM	1	
-9	750 295		PISTON	1	
-10	492 023		VALVE - Parking brake (No. 4200-A1)	2	
-11	752 791		RING - "O", 1/4 OD x 1/8" ID (10V70-S7-1)	1	
-12	752 798		RING - "O", 3/8 OD x 1/4" ID (10V70-S7-5)	1	
-13	80122-11		WASHER	6	
-14	80122-07		WASHER	2	
-15	752 788		ROD - Brake lock control (No. 4151)	2	
-16	41581-04		ROD - Tie	2	
-17	71061-04		LINE ASSEMBLY - Flexible	2	
-18	460 663		ELBOW - 45 . No. 3350 x 2	2	
-19	752 475		NIPPLE - Close, 1/8"	2	
-20	41561-00		STOP - Pedal	2	18-1 to 18-4314 inclusive
	14570-00		PLATE - Heel, cockpit floor, LH	1	18-4315 and up
	14570-01		PLATE - Heel, cockpit floor, RH	1	18-4315 and up
-21	81262-08		LINK - Pedal	4	
-22	41531-00		BLOCK - Pedal, inner	2	
-23	41521-00		BLOCK - Pedal, outer	2	
-24	80222-03		CLAMP - Pedal	4	
-25	10734-00		PEDAL ASSEMBLY - Brake, LH	1	
	10734-01		PEDAL ASSEMBLY - Brake, RH	1	
-26	85012-04		WASHER - Shim	AR	
	85012-05		WASHER - Shim	AR	
-27	751 492		CLAMP - Brake installation (2715-1)	2	
-28	12944-00		CHANNEL - Reinforcement	1	18-357 and up

1F4

INTENTIONALLY LEFT BLANK

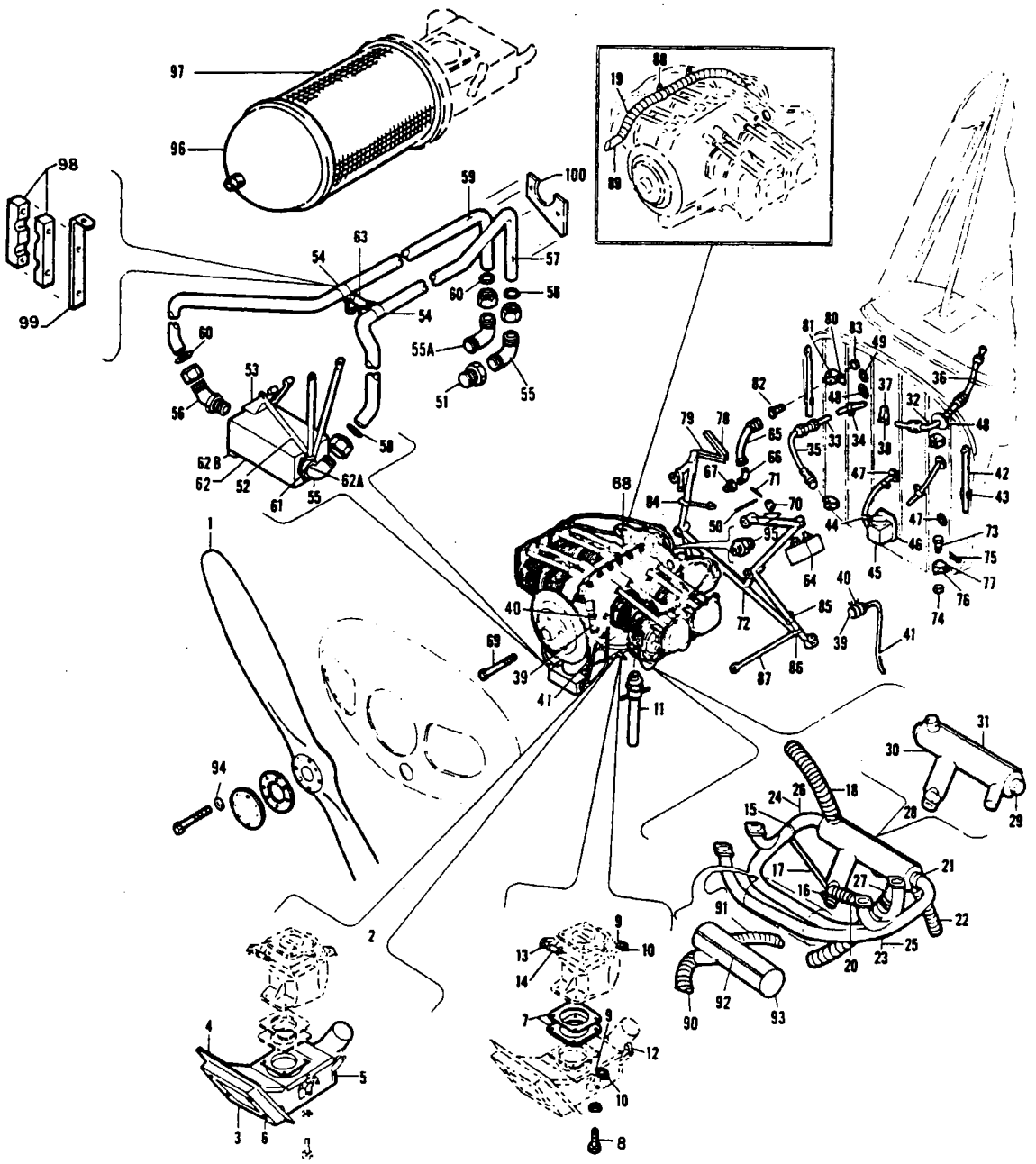

Figure 29. Power Plant Installation, Lycoming

PIPER PARTS CATALOG

Figure and Index Number	Part Number	Code	NOMENCLATURE	No. Req.	SERIAL NUMBERS AFFECTED
29-	12447		DRAWING - Power Plant, “105” (Rev. A to Y inclusive)		
	12447		DRAWING - Power Plant, “125” and “135”		
	14368		DRAWING - Oil Radiator Installation		18-3461,18-3464,18-3466 to 18-3469,18-3472 to 18-3475, 18-3477 to 18-3486,18-3488 to 18-7595 inclusive
	14468		DRAWING - Power Plant, “150”		18-3771 to 18-6963 inclusive
	14480		DRAWING - Conversion Instructions, 150 HP to 135 HP		
	13724	A	DRAWING - Oil Radiator Installation “135”		18-1215 to 18-3460,18-3462, 18-3463, 183465,18-3470, 18-3471, 18-3476 and 18-3487
	14728	A	DRAWING - Oil Radiator Installation		18-7596 and up
	15531	H	DRAWING - Oil Radiator Installation		18-7409140 and up
	15013		DRAWING - Power Plant “150”		18-6964 and up
-1	450 946		PROPELLER - Wood, No. 74FM48, “105”	1	
	450 938		PROPELLER - Wood, No. 74FM50, “125” (PA-18A only)	1	18-1215 to 18-1969 inclusive
	450 940		PROPELLER - Wood, No. 74FM52, “125” and “135”	1	PA-18 only) 18-549 to 18-3781
	450 940		PROPELLER - Wood, No. 74FM52, “13500	1	PA-18A only) 18-1812 to 18-3770 and 18-3772 to 18-3785 inclusive
	751 193		PROPELLER - Metal, No. M76AM-2-44, “105”	1	
	450 992		PROPELLER - Metal, No. M74DM6-0-52, “135”	1	18-1810 to 18-4617 inclusive
	450 981		PROPELLER - Metal, No. M76AM-2-50, “125”	1	18-549 to 18-1969 inclusive
	450 996	B,G	PROPELLER - Sensenich metal, 74DM6-0-56 “150”	1	
	450 994	G	PROPELLER - Sensenich metal, 74DM6-0-54 “150”	1	
	450 986	G	PROPELLER - Sensenich metal, 74DM6-0-55 “150”	1	
	450 992	K	PROPELLER - Sensenich metal, 74DM6-0-52)	1	
	450 995		PROPELLER - M74DM-55 (Used when 89-2000 floats are installed) “150”	1	18-3771, 18-3781 and up
	450 992	J	PROPELLER - M74DM6-0-52 (Used on restricted category PA-18A “150” airplanes)	1	
-2	11950-05		BOX ASSEMBLY - Carburetor air intake, “105” and “125”	1	
	13765-02	A	BOX ASSEMBLY - Carburetor air intake, “135”	1	18-1810 to 18-3013 inclusive
	14249-00		BOX ASSEMBLY - Carburetor air, complete, “135”	1	18-3014 to 18-4617 inclusive
	14444-00	C,E	BOX ASSEMBLY - Carburetor air, complete, “150”	1	18-3771 to 18-6963 inclusive
-3	460 639		FILTER ASSEMBLY - Air “105” and “125”	1	
	460 638	A,E	FILTER - Air, “135” (PAC No. 13681-00) “150”	1	
-4	11950-04		BAFFLE - Leather, “105”, “125”, “135” and “150”	1	
-5	11950-07		BOX ASSEMBLY - Less filter, “105”, “125” and “135”	1	18-1 to 18-3013 inclusive
	14253-02		BOX ASSEMBLY - Less filter, “135”	1	18-3014 and up
	14253-05	D,E	BOX ASSEMBLY - Less filter, “150”	1	18-3771 to 18-6963 inclusive
	15005-00	F	BOX ASSEMBLY - Less filter, “150”	1	18-6964 and up
-6	487 569		STUD - (No. 98293-8-1100) “105” and “125”	4	
	487 571	A	STUD - Attachment (No. 98293-15-2.100) “135”	4	
	480 650		PIN - (No. 99785-2) “105”, “125” and “135”	4	
	85012-60		WASHER	4	18-3014 and up
	487 542		STUD - Ball (P116-421-12-24A)	4	18-3014 to 18-6963 inclusive
	406 355		NUT - Tinnerman (A6052-632-1)	4	18-3014 and up

A - Also used on Model “125” PA-18 and PA-18A when Model 89-2000 floats are installed.
B - Used on PA-18 and standard PA-18A airplanes.
C - Use one each part numbers 15005-00, 15007-00 and 454 118 if Kit 754 223 has been installed.
D - Use part number 15005-00 if Kit 754 223 has been installed.
E - Used on all “150” seaplanes.
F - Not used on seaplanes.
G - Ascertain Sensenich Part Number Stamped on propeller decal and order accordingly.
H - Used if 60 amp alternator is installed.
J - Also used on PA-18-150 when glider towing.
K - Optional, can be used as an alternate to 74DM6-0-55 (450-986)

When ordering, always specify Part Number, Description, and Serial Number of Aircraft

PIPER PARTS CATALOG

Figure and Index Number	Part Number	Code	NOMENCLATURE	No. Req.	SERIAL NUMBERS AFFECTED
29-7	73451-03		PLATE - Attachment (1 per airplane for “150”)	2	
-8	10836-02		SCREW - Cap, air box to carburetor, “105”, “125” & “135”	4	
	401 918		BOLT - (MS20074-4-3) Air box to carburetor attachment “150”	4	
-9	91193-00		FITTING - Swivel, mixture control cable attachment	1	
	70371-02		FITTING - Swivel, carburetor heat control attachment at carburetor	1	
-10	70371-03		STUD - Mixture and carburetor heat control cable attachment	2	
-11	12956-04		VALVE ASSEMBLY - Oil drain	1	
-12	80032-34		CLAMP - Carburetor heat control cable attachment	1	
-13	82732-08		BUSHING - Spacer, throttle control attachment	1	
-14	80022-68		BUSHING - Spacer, throttle control attachment	1	
-15	10466-21		CLAMP - Tail pipe support, top	1	
-16	80002-20		CLAMP - Tail pipe support. bottom	1	18-1 to 18-3770 inclusive, 18-3772 to 18-3780 inclusive
	10466-33		CLAMP - Tail pipe support tube installation, bottom	1	18-3771,18-3781 and up
-17	13003-00		TUBE - Tail pipe support	1	
-18	101 980		TUBE - Flexible, aluminum 2-1/8” OD	27”	
	10525-32		HOSE - Right rear baffle to muffler shroud	1	18-3771, 18-3781 and up
-19	101 980		TUBE - Flexible, aluminum 2-1/8” OD	32”	18-549 to 18-1969 inclusive
-20	10525-05		HOSE - Flexible, shroud to carburetor air box	1	18-1 to 18-3013 inclusive
	10525-15		HOSE - Tail pipe shroud to carburetor air box	1	18-3014 to 18-3770 inclusive, 18-3772 to 18-3780 inclusive
	10525-18		HOSE - Tail pipe shroud to carburetor air box	1	18-3771, 18-3781 and up
-21	70591-02		CLAMP ASSEMBLY - Exhaust stack to muffler	2	18-1 to 18-3013 inclusive
	14235-00		CLAMP ASSEMBLY - Exhaust stack and muffler attachment	2	18-3014 and up
-22	10525-03		HOSE - Flexible, muffler to cabin heater	1	18-1 to 18-3013 inclusive
	10525-18		HOSE - Muffler to cabin heater	1	18-3014 and up
-23	12457-02		STACK ASSEMBLY - Exhaust, front cylinder, “105”	1	
-24	12457-03		STACK ASSEMBLY - Exhaust, rear cylinder. “105”	1	
-25	12457-12		STACK ASSEMBLY - Front cylinders “125”, “135” and “150” (12457-08)	1	
-26	12457-13		STACK ASSEMBLY - Rear cylinders “125”, “135” and “150” (12457-09) (12457-11)	1	
-27	12539-00	A	ELBOW ASSEMBLY - Air intake, muffler to flexible tube	1	
-28	12437-00		MUFFLER ASSEMBLY - Complete, “105”, “125” and “135”	1	
	14434-02		MUFFLER ASSEMBLY - Complete, “150” (14434-00)	1	
-29	12433-14	B	MUFFLER ASSEMBLY - Less shroud (12433-00)	1	
-30	12436-00		SHROUD ASSEMBLY - Muffler, “105”, “125” and “135”	1	
	12436-10		SHROUD - Muffler, “150”	1	
-31	71261-05		CLIP ASSEMBLY - Shroud	1	
-32	15216-00		HOSE ASSEMBLY - Flexible, oil pressure	1	
-33	82332-26		TUBE ASSEMBLY - Non-flexible, oil pressure	1	
-34	80032-51	C	CLAMP - Attachment, oil pressure line	1	
-35	71061-00		HOSE - Flexible, oil pressure line	1	
-36	82332-28		TUBE ASSEMBLY - Non-flexible, oil pressure line, 24” L	1	
	82332-38		TUBE ASSEMBLY - Non-flexible, oil pressure line, 13-1/2”L	1	

A - Used on PA-18 airplanes with serial numbers 18-1 to 18-621 inclusive, 18-723 to 18-733 inclusive, 18-736, 18-739 and 18-741.

B - See latest revision of Piper Service Bulletin 759 for serial numbers 18-1 to 18-8109031, 18-8109033 to 18-8309025.

C - See latest revision of Piper Service Letter 196.

When ordering, always specify Part Number, Description, and Serial Number of Aircraft

PIPER PARTS CATALOG

Figure and Index Number	Part Number	Code	NOMENCLATURE	No. Req.	SERIAL NUMBERS AFFECTED
29-37	454 890	A	CLIP - Tinnerman (No. A2828-022-16) "135" and "150" throttle control cable on firewall	1	18-1970 and up
-38	14174-00	A	ANGLE - Support throttle control cable, "135" and "150"	1	18-1970 and up
-39	74311-00		HOSE - Flexible, breather line, connector, "105", "125" and "135"	1	
	82371-56		HOSE - Flexible, engine breather line connector, "150"	1	
-40	454 882		CLAMP - 1", oil breather line, "105", "125" and "135"	2	
	554 947		CLAMP - (SAE TY F-10SS) Oil breather line, "150"	2	
-41	11957-00		TUBE - Breather, "105", "125" and "135"	1	
	14441-00		TUBE - Engine breather, "150"	1	
-42	12414-00		TUBE - Hold up, cowl side	2	
-43	454 873		CLIP - Cowl hold up tube	2	
-44	454 887		CLAMP - Tinnerman, cabin heat and mixture control cable	5	
	454 927		CLAMP - Tinnerman, (A4980S-2-91) primer line attachment	4	18-3771, 18-3781 and up
-45	12353-00		BOX ASSEMBLY - Cabin heat	1	
-46	12440-00		PLATE - Inside firewall	1	
-47	434 134		GROMMET - Rubber (AN931-6-10) Carburetor and cabin heat control	2	
-48	434 142		GROMMET - Rudder (AN931-14-20) Tachometer shaft, throttle mixture control	3	
-49	434 134		GROMMET - Rubber (AN931-6-10) Air vent control cable	1	18-2168 and up
-50	12797-00		PLATE - Lock, oil cooler, "125"	1	
-51	451 855	A	ADAPTER - (W/H 3200 x 6) "125", "135" and "150"	1	
-52	13725-00	A,B	BRACKET ASSEMBLY - Support, LH, "135" and "150"	1	
	13725-07		BRACKET ASSEMBLY - Oil radiator support, LH	1	18-4658 and up
-53	13720-00	A,B	BRACKET ASSEMBLY - Support, RH, "135" and "150"	1	
	13720-04		BRACKET ASSEMBLY - Oil radiator support, RH	1	18-4658 and up
-54	13711-00	A,C	BRACKET ASSEMBLY - Support, "135"	2	
	454 933		CLAMP - Tinnerman (A409-S-8-91) bracket attachment	2	18-3771, 18-3781 and up
-55	458 931	A,D	ELBOW - (No. 905-8B) "135" and "150"	2	
-55a	458 931	A	ELBOW - (No. 905-8B) "135" and "150"	1	
	458 898	G	ELBOW - (AN822-8D)	1	18-7409140 and up
-56	458 932	A	ELBOW - (No. 1100-8) "135" and "150"	1	
	476 664	G	NIPPLE - (AN816-8D) "150"	1	18-7409140 and up
-57	13723-00	A,E	LINE ASSEMBLY - LH, outlet, "135"	1	
	14367-00	F	LINE ASSEMBLY - Oil cooler, left, outlet	1	
	60726-02		LINE ASSEMBLY - Oil cooler, left, outlet	1	18-7596 and up

A - Also used on Model "125" PA-18 and PA-18A airplanes when model 89-2000 floats are installed.
B - Used on models "135" and "150" PA-18 and PA-18A airplanes with serial numbers 18-1810 to 18-4657 inclusive.
C - Used on airplanes with serial numbers 18-1215 to 18-3770 inclusive and 18-3772 to 18-3780 inclusive.
D - Two (2) required for airplanes with serial numbers 18-3461, 18-3464, 18-3466 to 18-3469 inclusive, 18-3472 to 18-3475 inclusive, 18-3477 to 18-3486 inclusive, 18-3488 to 18-7595 inclusive.
E - Used on airplanes with serial numbers 18-1810 to 18-3460 inclusive, 18-3462, 18-3463, 18-3465, 18-3470, 18-3471, 18-3476 and 18-3487.
F - Used on airplanes with serial numbers 18-3461, 18-3464, 18-3466 to 18-3469 inclusive, 18-3472 to 18-3475 inclusive, 18-3477 to 18-3486 inclusive, 18-3488 to 18-7595 inclusive.
G - Used if 60 amp alternator is installed.

Figure and Index Number	Part Number	Code	NOMENCLATURE	No. Req.	SERIAL NUMBERS AFFECTED
29-58	484 654	A	RING - Seal, "135" and "150"	2	
-59	13722-00	A,B	LINE ASSEMBLY - RH, inlet, "135"	1	
	14366-00	C	LINE ASSEMBLY - Oil cooler, right, inlet	1	
	14624-00		LINE ASSEMBLY - Oil cooler, right, inlet	1	18-7596 and up
	39995-35	D	HOSE ASSEMBLY - Oil cooler, right, inlet	1	18-7409140 and up
-60	484 654	A	RING - Seal, "135" and "150"	2	
-61	13726-00	A	PLATE - Lock, "135" and "150"	2	
-62	455 168	A	RADIATOR - Oil cooler, 12 plate (PAC No. 14206-00) "135" and "150"	1	
-62a	752 494		NUT - Oil radiator	2	
-62b	453 647		BUMPER - Oil radiator, snap in (4235)	4	18-3771, 18-3781 and up
-63	14054-00	A	STRAP - Bracket support, "135"	1	
	14549-00		BRACKET - Line support, oil radiator	1	18-3771, 18-3781 and up
-64	455 162		RADIATOR - Oil cooler, "125"	1	
-65	465 134		HOSE ASSEMBLY - Oil cooler 16-3/4" (12762-04) "125"	2	
-66	458 924		ELBOW - (W/H 49 x 6B) "125" (oil radiator line)	2	
-67	451 855		ADAPTER - (W/H 3200 x 6) "125" and "135"	1	
-68			ENGINE - Lycoming (O-235-C1) "105"	1	
			ENGINE - Lycoming (O-290-D) "125"	1	
			ENGINE - Lycoming (O-290-D2) "135"	1	
			ENGINE - Lycoming (O-320) "150"	1	
-69	400 321		BOLT - (AN8-44)	4	
-70	404 105		NUT - (AN310-8)	4	
-71	424 059		PIN - Cotter (AN380-3-3)	4	
-72	12351-15		MOUNT ASSEMBLY - Engine, "105", "135" and "150"	1	
	12351-11		MOUNT ASSEMBLY - Engine, "125"	1	
-73	400 211		BOLT - (AN6-16)	4	
-74	404 103		NUT - (AN310-6)	4	
-75	424 059		PIN - Cotter (AN380-3-3)	4	
-76	81102-17		WASHER - Attachment, steel	4	
-77	80122-43		WASHER - Attachment, fibre	3	
-78	12411-02		HINGE - Motor mount, rear	1	
-79	12410-00		HINGE - Motor mount, front	1	
-80	12409-00		LUG - Hinge attachment	1	
-81	12213-00		BRACKET ASSEMBLY - "U"	4	
-82	401 400		BOLT - (AN6-20A)	4	
-83	406 683		NUT - Elastic stop (42E054)	4	
-84	12408-00		CLAMP ASSEMBLY - Throttle control	1	
-85	12407-00		CLAMP ASSEMBLY - Mixture control	1	
-86	80002-27		CLAMP - Cowl support tube	2	
-87	12350-00		TUBE - Cowl support	2	

A - Also used on model "125" PA-18 and PA-18A airplanes when model 89-2000 floats are installed.
B - Used on airplanes with serial numbers 18-1810 to 18-3460 inclusive, 18-3462, 18-3463, 18-3465, 18-3470, 18-3471, 18-3476 and 18-3487.
C - Used on airplanes with serial numbers 18-3461, 18-3464, 18-3466 to 18-3469 inclusive, 18-3472 to 18-3475 inclusive, 18-3477 to 18-3486 inclusive, 18-3488 to 18-7595 inclusive.
D - Used if 60 amp alternator is installed.

Figure and Index Number	Part Number	Code	NOMENCLATURE	No. Req.	SERIAL NUMBERS AFFECTED
29-88	80002-62	A,B	CLAMP - Round, flexible air intake tube	2	
-89	14189-00	A,B	TUBE ASSEMBLY - Air intake	1	
-90	10525-14		HOSE - Exhaust stack shroud to bottom cowl	1	18-3014 and up
-91	10525-19		HOSE - Exhaust stack shroud to muffler shroud	1	18-3014 and up
-92	71261-07		CLIP - Shroud, exhaust stack	1	18-3014 and up
-93	14239-00		SHROUD - Exhaust stack	1	18-3014 and up
-94	80122-55		WASHER - Attaching propeller	6	
-95	455 158	C	CONNECTOR - Male, oil outlet port (500 x 8)	1	
-96	15007-00	D	DOME - Carburetor air filter	1	18-6964 and up
-97	454 118	D	CARTRIDGE - Air filter	1	18-6964 and up
-98	15020-00		BLOCK - Line attachment	2	18-7596 and up
-99	15019-00		BRACKET - Baffle reinforcement	1	18-7596 and up
-100	15158-00		PLATE - Baffle reinforcement "150"	1	18-7596 and up
	15530-02	E	PLATE - Baffle reinforcement "150"	1	18-7409140 and up

A - Used on PA-18 airplanes with serial numbers 18-549 to 18-1969 inclusive.
B - Used when model 89-2000 floats installed on PA-18 and PA-18A airplanes model "125" only.
C - Used on airplanes with serial numbers 18-3461, 18-3464, 18-3466 to 18-3469 inclusive, 18-3472 to 18-3475 inclusive, 18-3477 to 18-3486 inclusive, 18-3488 to 18-7595 inclusive.
D - Not used on seaplanes.
E - Used if 60 amp alternator is installed.

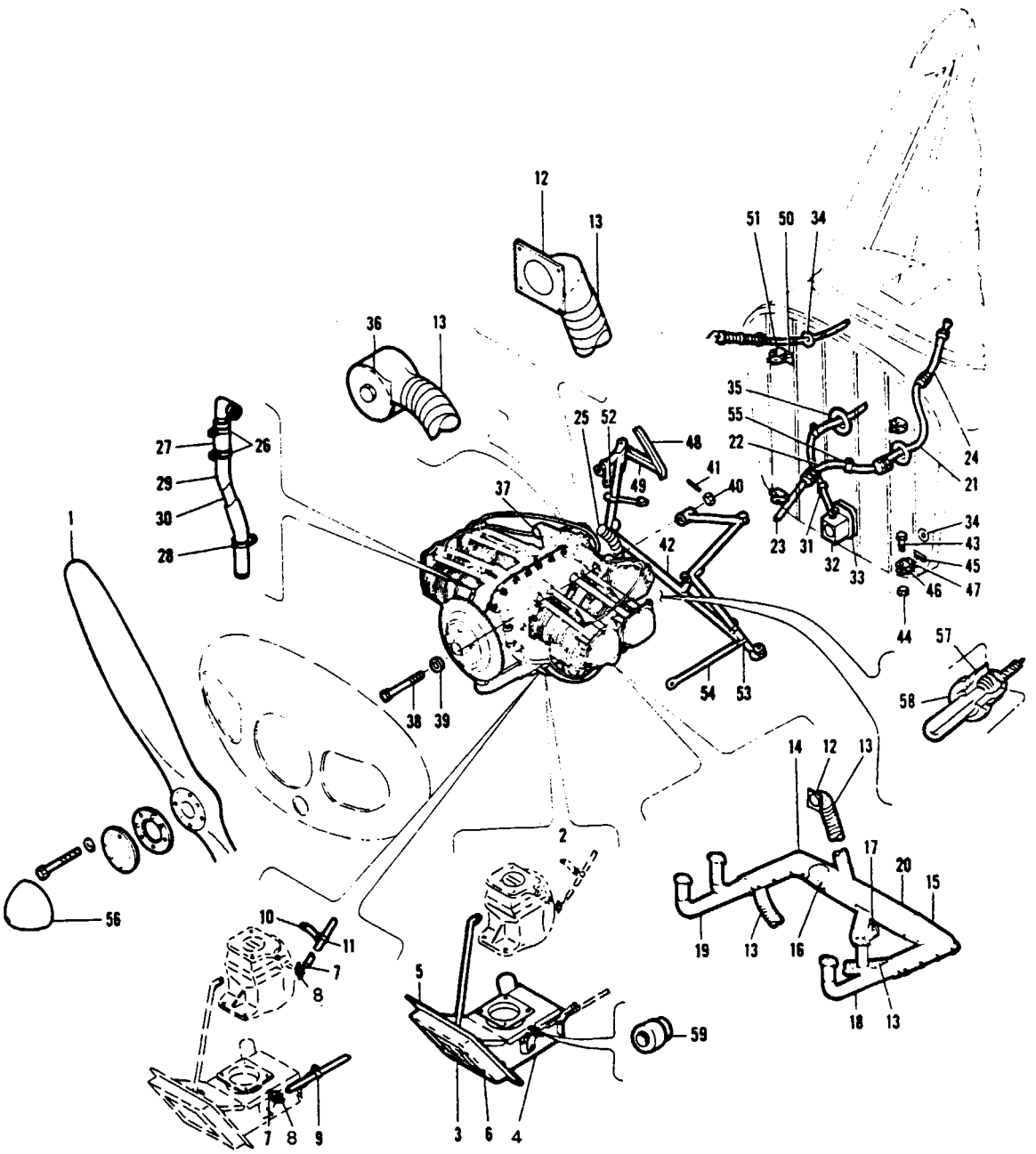

Figure 30. Power Plant Installation, Continental

PIPER PARTS CATALOG

Figure and Index Number	Part Number	Code	NOMENCLATURE	No. Req.	SERIAL NUMBERS AFFECTED
30-	12242		DRAWING - Power Plant		
-1	450 930		PROPELLER - Wood (No. 72GK50)	1	
-2	15087-00		BOX ASSEMBLY - Carburetor air	1	
-3	460 639		* FILTER ASSEMBLY - Air	1	
-4	15087-04		* BOX - Less filter	1	
-5	11950-04		* BAFFLE - Leather	1	
-6	487 569		* STUD - Attachment (No. 98293-8-1.00)	4	
	480 650		* PIN - Attachment (No. 99785-2)	4	
-7	91193-00		FITTING - Swivel, mixture control attachment	1	
-8	70371-03		STUD - Mixture and carburetor heat control attachment	2	
-9	80032-34		CLAMP - Carburetor heat control cable	1	
-10	81262-19		LINK - Mixture control cable	1	
-11	454 887		CLAMP - Attachment, mixture control cable	4	
-12	12372-00		TAKE-OFF ASSEMBLY - (1 per ship C-90-12F engine) (2 per ship C-90-8F engine)		
-13	101 980		TUBE - Flexible aluminum 2-1/8" OD (when electrical equipment is not installed)	50"	
	101 980		TUBE - Flexible aluminum 2-1/8" OD (when electrical equipment is installed)	74"	
-14	10845-00		SHROUD - Exhaust, right upper	1	
	10846-00		SHROUD - Exhaust, right lower	1	
-15	10764-00		SHROUD - Exhaust, left upper	1	
	10843-00		SHROUD - Exhaust, left lower	1	
-16	70591-02		CLAMP ASSEMBLY - Muffler to stack	2	
-17	10525-06		HOSE - Flexible, cabin heat	1	(PA-18 only) 18-1 to 18-3013
	10525-17		HOSE - Flexible, cabin heat to muffler connector	1	(PA-18 only) 18-3014 and up
-18	12232-00	A	STACK AND MUFFLER ASSEMBLY - Exhaust, LH	1	
-19	12233-00		STACK ASSEMBLY - Exhaust, RH	1	
-20	12226-00		SHROUD ASSEMBLY - Muffler	1	
-21	15216-00		HOSE ASSEMBLY - Flexible, oil pressure	1	
-22	82332-26		TUBE ASSEMBLY - Non-flexible, oil pressure	1	
-23	71061-00		HOSE ASSEMBLY - Flexible, oil pressure	1	
-24	82332-28		TUBE ASSEMBLY - Non-flexible, oil pressure	1	
-25	85052-13		TUBE - Flexible aluminum (used only with C-90-12F engine to generator)	1	
-26	454 882		CLAMP -1" Hose	2	
-27	74311-00		HOSE - Flexible, breather line connector	1	
-28	72941-02		CLAMP ASSEMBLY - Breather line	1	
-29	10516-00		COVER - Breather tube	1	
-30	84332-00		TUBE - Engine breather	1	
-31	454 887		CLAMP - Attachment, cabin heat control (No. A2980S-3-199A)	2	
-32	12315-00		BOX ASSEMBLY - Cabin heat	1	
-33	12320-00		PLATE - Cabin air intake, inside firewall	1	
-34	434 134		GROMMET - Rubber (AN931-6-10) (Starter and carburetor heat control cable)	2	
-35	434 142		GROMMET - Rubber (AN931-14-20), cabin heat control and throttle control	2	
-36	12230-00		PLATE - Oil well baffle (used only with C-90-12F engine)	1	
-37			ENGINE - Continental C-90-8F	1	
			ENGINE - Continental C-90-12F, electrical	1	
-38	400 275		BOLT - (AN7-36)	4	
-39	80122-43		WASHER - Fibre mount to engine	AR	

E - See latest revision of Piper Service Bulletin 759, for serail numbers 18-1 to 18-8109031, 18-8109033 to 18-8309025.

When ordering, always specify Part Number, Description, and Serial Number of Aircraft

PIPER PARTS CATALOG

Figure and Index Number	Part Number	Code	NOMENCLATURE	No. Req.	SERIAL NUMBERS AFFECTED
30-40	404 104		NUT - (AN310-7)	4	
-41	424 059		PIN - Cotter (AN380-3-3)	4	
-42	12209-00		MOUNT ASSEMBLY - Engine	1	
-43	400 211		BOLT - (AN6-16)	4	
-44	404 103		NUT - (AN310-6)	4	
-45	424 059		PIN - Cotter (AN380-3-3)	4	
-46	81102-17		WASHER - Motor mount attachment, steel	4	
-47	80122-43		WASHER - Motor mount attachment, fibre	3	
-48	12411-02		HINGE - Motor mount, rear	1	
-49	12410-00		HINGE - Motor mount, front	1	
-50	12409-00		LUG - Motor hinge attachment	1	
-51	12213-00		BRACKET - "U", engine mount attachment	4	
-52	70801-00		CLAMP ASSEMBLY - Throttle control	1	
-53	80002-27		CLAMP - Cowl support tube	2	
-54	10817-03		TUBE - Cowl support, LH	1	
	10817-02		TUBE - Cowl support, RH	1	
-55	80002-03		CLAMP - Oil pressure line, at magneto	2	
-56	750 709		SPINNER ASSEMBLY - Propeller (3M-168)	1	
-57	451 851		ADAPTER - Oil temperature line installation (AH-1172-C)	1	(PA-18 only) 18-3014 and up
-58	462 012		WASHER - Adapter, oil temperature line installation (AH-1522)	1	(PA-18 only) 18-3014 and up
-59	70371-02		FITTING - Swivel carburetor heat control attachment (at carburetor)	1	

When ordering, always specify Part Number, Description and Serial Number of Aircraft

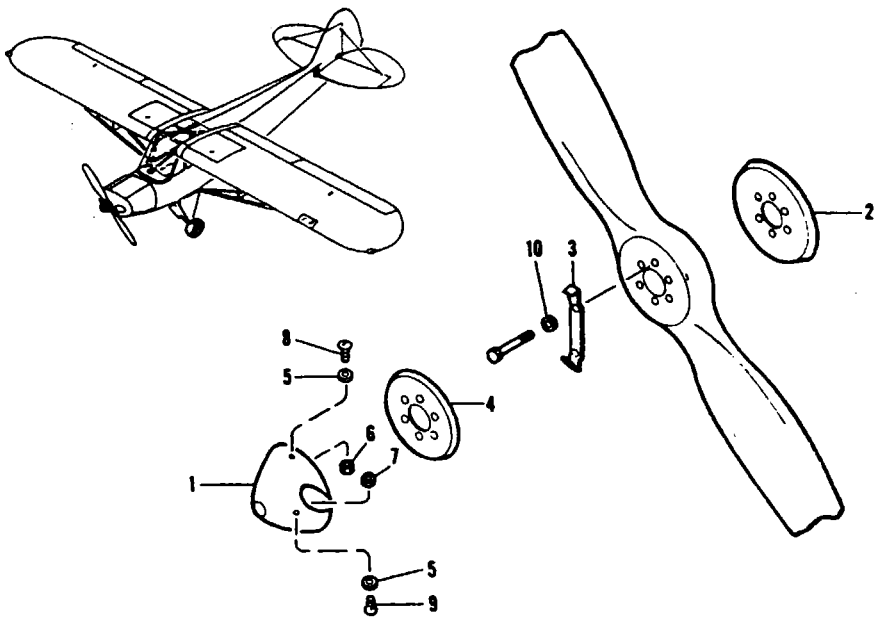

Figure 31. Spinner Installation

PIPER PARTS CATALOG

Figure and Index Number	Part Number	Code	NOMENCLATURE	No. Req.	SERIAL NUMBERS AFFECTED
31-1	12416-00	A	SPINNER ASSEMBLY - (Sensenich metal propeller)	1	
	10246-00	A	SPINNER ASSEMBLY - (Sensenich wood propeller)	1	
	13668-00	B	SPINNER ASSEMBLY - (Sensenich wood propeller)	1	
	13163-00	C	SPINNER ASSEMBLY - (Sensenich metal propeller)	1	
	13661-00	B	SPINNER ASSEMBLY - (Sensenich metal propeller) "125" and "135"	1	
	13187-00	C	SPINNER ASSEMBLY - (Sensenich wood propeller)	1	
	14422-00		SPINNER ASSEMBLY - (Sensenich metal propeller) "150"	1	
-2	10247-00	A	PLATE - Back	1	
	13666-00	B	PLATE - Back (Sensenich wood propeller)	1	
	13164-00	C	PLATE - Back (Sensenich metal propeller)	1	
	13663-00	B	PLATE - Back (Sensenich metal propeller) "125" and "135"	1	
	13188-00	C	PLATE - Back (Sensenich wood propeller)	1	
	14424-00		PLATE - Rear "150" (Sensenich metal propeller)	1	
-3	12330-04	AC	BRACKET - Front (Sensenich metal propeller)	1	
	12330-02	AC	BRACKET - Front (Sensenich wood propeller)	1	
-4	13667-00	B	PLATE - Front (Sensenich wood propeller)	1	
	13664-00	B	PLATE - Front (Sensenich metal propeller) "125" & "135"	1	
	14426-00		PLATE - Front "150" (Sensenich metal propeller)	1	
-5	85012-47		WASHER - Fibre (10 per ship - used on airplanes with serial numbers 18-647 and up)	4	
-6	406 351	A	NUT - Tinnerman, spinner attachment to back plate (No. A880-632-1)	10	
	406 359	C	NUT - Tinnerman (No. A1505-1032-1)	6	
-7	406 357	A	NUT - Tinnerman, spinner attachment to front bracket (No. A190-832-1)	2	
	406 359	C	NUT - Tinnerman (No. A1505-1032-1)	2	
-8	415 737	A	SCREW - Machine, spinner attachment to back plate (No. 6-32-3 8")	10	
	416 995	BC	SCREW - Machine truss head (No. 10-32 x 1/2")	6	
-9	415 754	A	SCREW - Machine, spinner attachment to front bracket (No. 8-32 x 1/2")	2	
	416 995	BC	SCREW - Machine truss head (No. 10-32 x 1/2") (2 per ship - used on airplanes with serial numbers 18-647 to 18-745 inclusive)	4	
-10	80122-55	B	WASHER - Propeller bolt attachment	6	

A - Used on airplanes with serial numbers 18-1 to 18-646 inclusive.
B - Used on airplanes with serial numbers 18-1746 and up.
C - Used on airplanes with serial numbers 18-647 to 18-1745 inclusive.

NOTE: The spinner installation shown on Figure 31 is applicable on "105", "125", "135" and "150" airplanes.

When ordering, always specify Part Number, Description and Serial Number of Aircraft

1F16

INTENTIONALLY LEFT BLANK

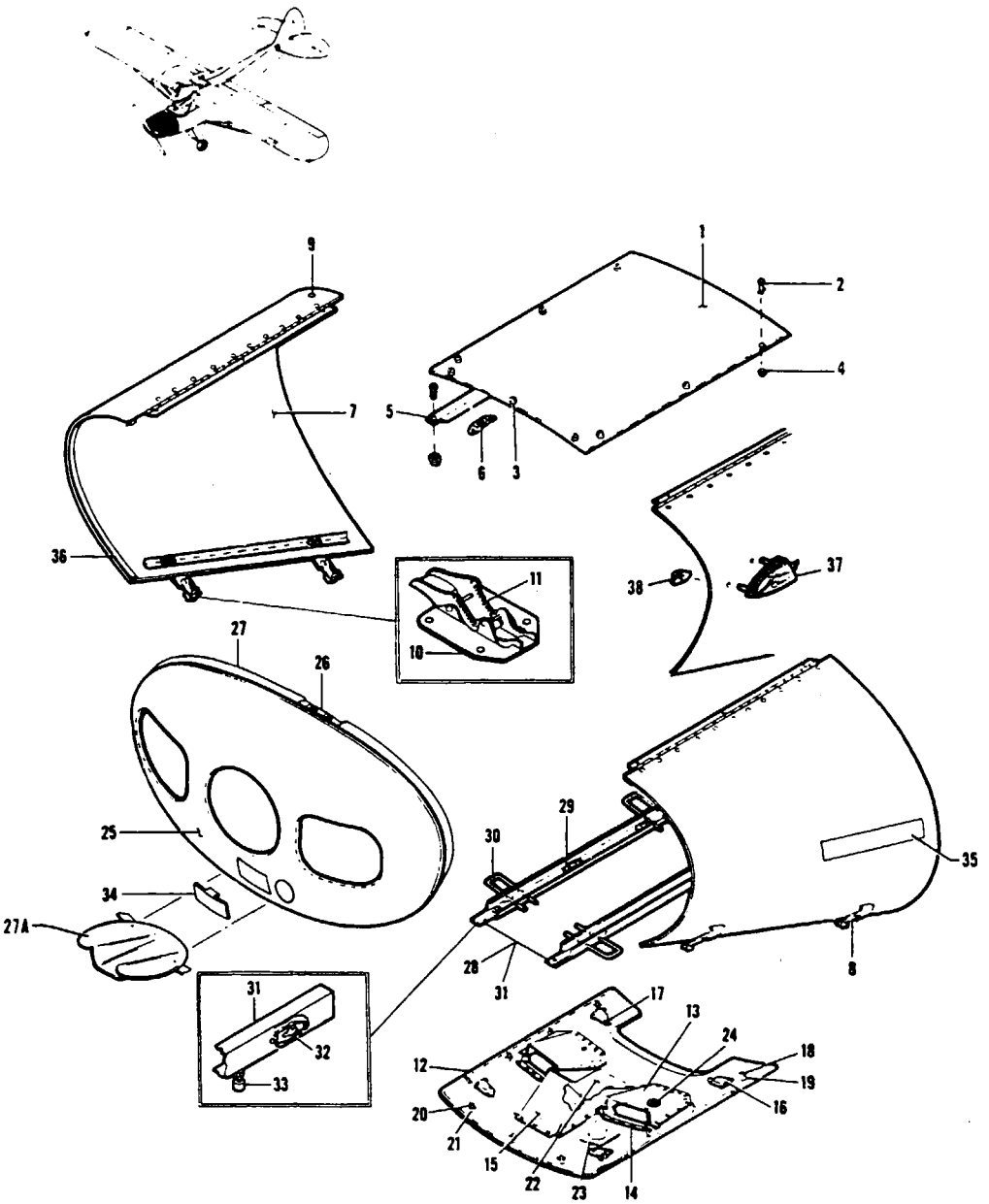

Figure 32. Cowl Installation, Lycoming

PIPER PARTS CATALOG

Figure and Index Number	Part Number	Code	NOMENCLATURE	No. Req.	SERIAL NUMBERS AFFECTED
32-1	12356-00		COWL ASSEMBLY - Top, "105"	1	
	12356-03		COWL ASSEMBLY - Top, "125", "135" and "150"	1	
-2	487 563		* STUD - Fastener (No. 5-0-140A)	6	
-3	487 564		* STUD - Fastener (No. 5-0-180A) front, "105"	3	
	487 565		* STUD - Fastener (No. 5-0-200A) front, "125", "135" and "150"	3	
-4	463 368		* GROMMET - (No. GOS-5-93)	9	
-5	12362-00		BRACKET - Cowl mounting, top, "105"	2	
	12362-03		BRACKET - Cowl mounting, top, "125", "135" and "150"	2	
-6	487 288		* SPRING - Stud fastener	3	
-7	13029-00		COWL ASSEMBLY - Side, "125", "135" and "150", LH	1	
	13029-01		COWL ASSEMBLY - Side, "125", "135" and "150", RH	1	
	12358-00		COWL ASSEMBLY - Side, "105", LH	1	
	12358-01		COWL ASSEMBLY - Side, "105", RH	1	
-8	12723-04		* FASTENER ASSEMBLY - "125", "135" and "150"	2	
-9	12360-00		* STUD - Cowl stop	1	
-10	472 015		* LATCH - "105" (No. H4700C)	2	
-11	750 896		* * SPRING - "105"	2	
-12	12357-03		COWL ASSEMBLY - Bottom, "125"	1	
	12357-00		COWL ASSEMBLY - Bottom, "105"	1	
	13769-00	A	COWL ASSEMBLY - Bottom, "135"	1	18-1810 to 18-3013 inclusive
	13769-03		COWL ASSEMBLY - Engine, bottom, "135"	1	18-3014 to 18-4617 inclusive
	13769-05	B	COWL ASSEMBLY - Engine, bottom"150"	1	18-3771 to 18-6963 inclusive.
	15012-00	C	COWL ASSEMBLY - Engine, bottom, "150"	1	18-6964 and up
	13769-05	D	COWL ASSEMBLY - Engine, bottom, "150"	1	18-6964 and up
-13	12540-00		* PLATE - Vent (less oil drain hole), LH	2	
	12540-02		* PLATE - Vent (with oil drain hole), RH	1	
-14	12541-00		* FLANGE - Vent, outside	2	
-15	12543-02		* SCOOP - Carburetor air, "105", "125" and "135"	1	
	12543-02	B	* SCOOP - Carburetor air, "150"	1	
	12543-02		* SCOOP - Carburetor air, "150"	1	18-3371 to 18-6963 inclusive
	15010-00	C	* SCOOP - Carburetor air, "150"	1	18-6964 and up
	12543-02	D	* SCOOP - Carburetor air, "150"	1	18-6964 and up
-16	12707-00		* CUP - Cowl fastener, "125", "135" and "150"	4	
-17	484 341		* RECEPTACLE - Cowl fastener, "125", "135" and "150"	4	
-18	487 566		* STUD - Cowl fastener, side (No. 5-F-60) "125", "135" and "150"	8	
	487 563		* STUD - Fastener (No. 5-0-140A) "105"	8	
-19	463 369		* GROMMET - Sides (No. GF-150) "125", "135" and "150"	8	
-20	487 565		* STUD - Cowl fastener, front (No. 5-0-200A) "125", "135" and "150" (4 per ship model "135")	3	
	487 564		* STUD - Fastener (No. 5-0-180A), "105"	3	
-21	463 368		* GROMMET - Front (No. GOS-5-93) (11 per ship model "105" front and sides 4 per ship model "135"), "150"	3	

A - Also used on PA-18 and PA-18A model "125" airplanes when model 89-2000 floats are installed.
B - Used on all "150" seaplanes.
C - Not used on seaplanes.
D - Used when model 89-2000 floats are installed.

When ordering, always specify Part Number, Description and Serial Number of Aircraft

PIPER PARTS CATALOG

Figure and Index Number	Part Number	Code	NOMENCLATURE	No. Req	SERIAL NUMBERS AFFECTED
32-22	13099-00		* SCOOP - Air, "125" outside	1	
	12374-00		* SCOOP - Air, "105"	1	
	13768-00		* SCOOP - Carburetor air, "135"	1	18-1810 to 18-4617 inclusive
	13768-03	D	* SCOOP - Carburetor air, outside "150"	1	
	13768-03		* SCOOP - Carburetor air, outside "150"	1	18-3371 to 18-6963 inclusive
	15009-00	C	* SCOOP - Carburetor air, outside "150"	1	18-6964 and up
	13768-03	D	* SCOOP - Carburetor air, outside, "150"	1	18-6964 and up
-23	13334-00		* TAKE-OFF AIR	1	18-1 to 18-3013 inclusive
	14236-00		* TAKE-OFF AIR	1	18-3014 and up
-24	434 142		* GROMMET - Oil drain (AN931-14-20)	1	
-25	12355-00		COWL ASSEMBLY - Nose, "105" and "125" (used when electrical equipment is installed)	1	
	12355-04		COWL ASSEMBLY - Nose, "105" and "125" (used when electrical equipment is not installed.)	1	
	13716-00	A	COWL ASSEMBLY - Nose, "135" and "150" (used when electrical equipment is installed)	1	
	13716-02	A	COWL ASSEMBLY - Nose, "135" and "150" (used when electrical equipment is not installed)	1	
-26	487 288		* SPRING - (No. 5-295)	7	
-27	180 808		* WEBBING - Cowl	6'	
-27a	13717-00	A	* SCOOP ASSEMBLY - Nose Cowl air, "135" and "150"	1	
-28	12364-00	B	BRACKET - Cowl mounting, LH	1	
	12364-01	B	BRACKET - Cowl mounting, RH	1	
-29	487 288		* SPRING - Stud fastener	4	
-30	10816-00	B	* CATCH - Fastener	2	
-31	12364-03		BRACKET - Cowl mounting, LH	1	18-549 and up
	12364-05		BRACKET - Cowl mounting, RH	1	18-549 and up
-32	487 288		* SPRING - Stud fastener	4	
-33	453 640		* TIP - Rubber	1	18-549 and up
-34	14073-00		COVER - Radiator, nose cowl, "135" and "150"	1	
-35	15098-00		DECAL - "Super Cub"	2	18-7521 to 18-7609157 incl.
	64995-03		DECAL - "Super Cub"	2	18-7809001 to 18-7809188 incl.
-36	187 550	B	MOULDING - Cowl, rubber, "105"	105"	
-37	14472-00		MEDALLION - Super Cub "150", engine cowl	2	
-38	406 361		NUT - Tinnerman A1059-014-1, medallion attachment	6	

A - Also used on PA-18 and PA-18A model "125" airplanes when model 89-2000 floats installed.
B - Used on PA-18 airplanes with serial numbers 18-1 to 18-548 inclusive.
C - Not used on seaplanes.
D - Used on all "150" seaplanes.
E - Used when model 89-2000 floats are installed.

When ordering, always specify Part Number, Description and Serial Number of Aircraft

1F20
INTENTIONALLY LEFT BLANK

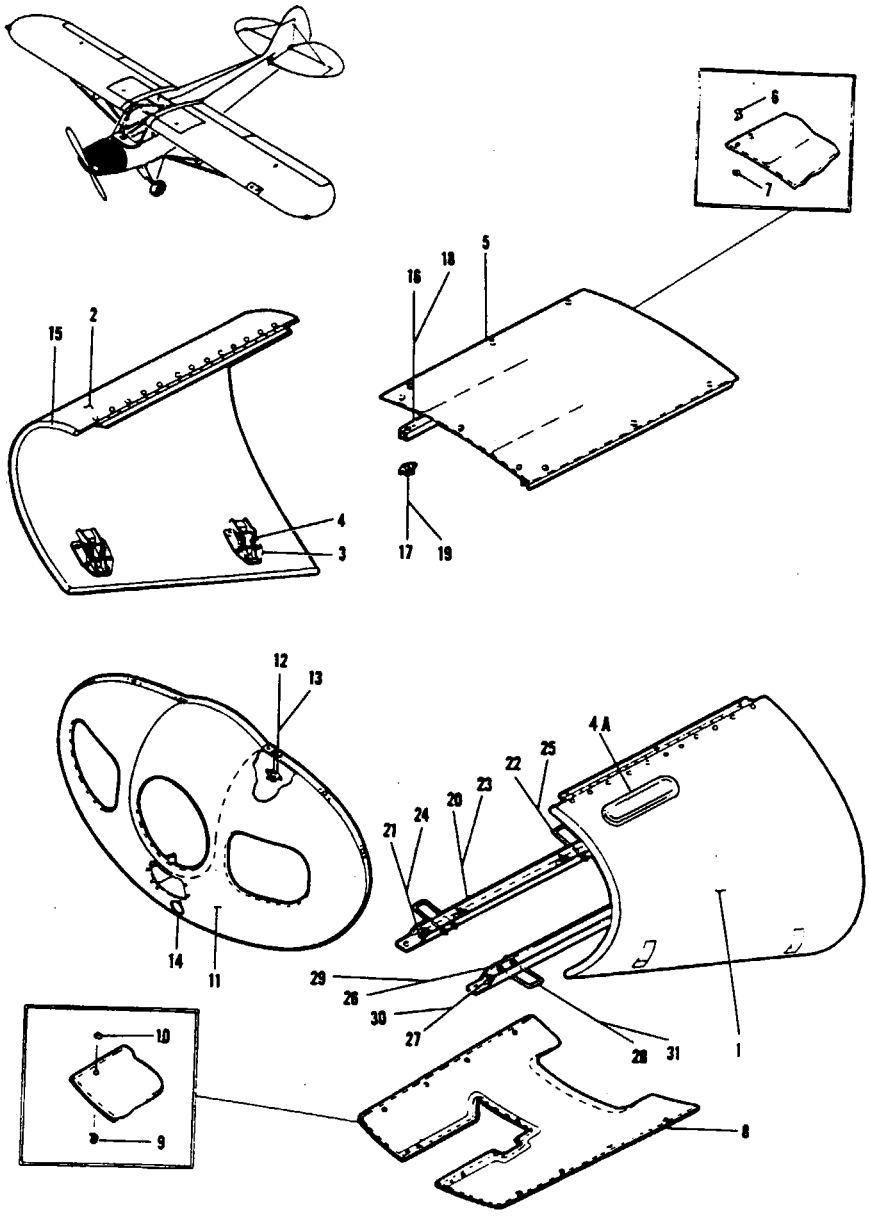

Figure 33. Cowl Installation, Continental

PIPER PARTS CATALOG

Figure and Index Number	Part Number	Code	NOMENCLATURE	No. Req.	SERIAL NUMBERS AFFECTED
33-	10800		DRAWING - Cowl Installation (when cowling installed with machine screws)		
	14197		DRAWING - Cowl Installation (when cowling installed with lion fasteners)		
-1	10810-08	A	COWL ASSEMBLY - Side, LH (when shielded ignition is not installed)	1	
	10810-30	A	COWL ASSEMBLY - Side, LH (when shielded ignition is installed)	1	
	10810-26	B	COWL ASSEMBLY - Side, LH (when shielded ignition is not installed)	1	
	10810-16	B	COWL ASSEMBLY - Side, LH (when shielded ignition is installed)	1	
-2	10810-07	A	COWL ASSEMBLY - Side, RH (when shielded ignition is not installed)	1	
	10810-29	A	COWL ASSEMBLY - Side, RH (when shielded ignition is installed)	1	
	10810-25	B	COWL ASSEMBLY - Side, RH (when shielded ignition is not installed)	1	
	10810-15	B	COWL ASSEMBLY - Side, RH (when shielded ignition is installed)	1	
-3	472 015		LATCH - No. H-4700C	2	
-4	750 896		SPRING	2	
-4a	12405-00		CUP - Cowl	1	
-5	10808-02	A	COWL ASSEMBLY - Top	1	
	10808-03	B	COWL ASSEMBLY - Top	1	
-6	487 563	B	STUD - Fasteners No. 5-10-140A	8	
-7	463 368	B	GROMMET - GOS-5-93	8	
-8	10809-08	A	COWL ASSEMBLY - Bottom	1	
	10809-10	B	COWL ASSEMBLY - Bottom	1	
-9	487 563	B	STUD - Fasteners No. 5-10-140A	10	
-10	463 368	B	GROMMET - GOS-5-93	10	
-11	10802-00	A	COWL ASSEMBLY - Nose	1	
	10802-05	B	COWL ASSEMBLY - Nose	1	
-12	406 779	A	NUT - Anchor, No. W2SE-1032	4	
-13	487 288	B	SPRING - No. 5-295	4	
-14	10400-06		SCOOP ASSEMBLY - Air (Used with C-90-8F engine)	1	
	72522-00		SCOOP ASSEMBLY - Air (Used with C-90-12F engine)	1	
-15	187 513		MOULDING - Rubber	6'	
-16	10814-04	A	BRACKET - Mounting, top	2	
-17	406 779	A	NUT - Anchor, No. W2SE-1032	3	
-18	10814-05	B	BRACKET - Mounting, top	2	
-19	487 288	B	SPRING - No. 5-295	3	

A - Used on PA-18 airplanes when cowling installed with machine screws.
B - Used on PA-18 airplanes when cowling installed with lion fasteners.

PIPER PARTS CATALOG

Figure and Index Number	Part Number	Code	NOMENCLATURE	No. Req.	SERIALNUMBERS AFFECTED
33-20	10815-05	A	BRACKET - Mounting, bottom, RH	1	
-21	406 779	A	NUT - Anchor, (No. W2SE-1032)	4	
-22	10816-00		CATCH - Fastener, side cowl	2	
-23	10815-07	B	BRACKET - Mounting, RH	1	
-24	487 288	B	SPRING - (No. 5-295)	4	
-25	10816-00		CATCH - Fastener, side cowl	2	
-26	10815-04	A	BRACKET - Mounting, bottom, LH	1	
-27	406 779	A	NUT - Anchor (No. (W2SE-1032)	4	
-28	10816-00		CATCH - Fastener, side cowl	2	
-29	10815-06	B	BRACKET - Mounting, bottom, LH	1	
-30	487 288	B	SPRING - (No. 5-295)	4	
-31	10816-00		CATCH - Fastener, side cowl	2	

A - Used on PA-18 airplanes when cowling installed with machine screws.
B - Used on PA-18 airplanes when cowling installed with lion fasteners.

1F24
INTENTIONALLY LEFT BLANK

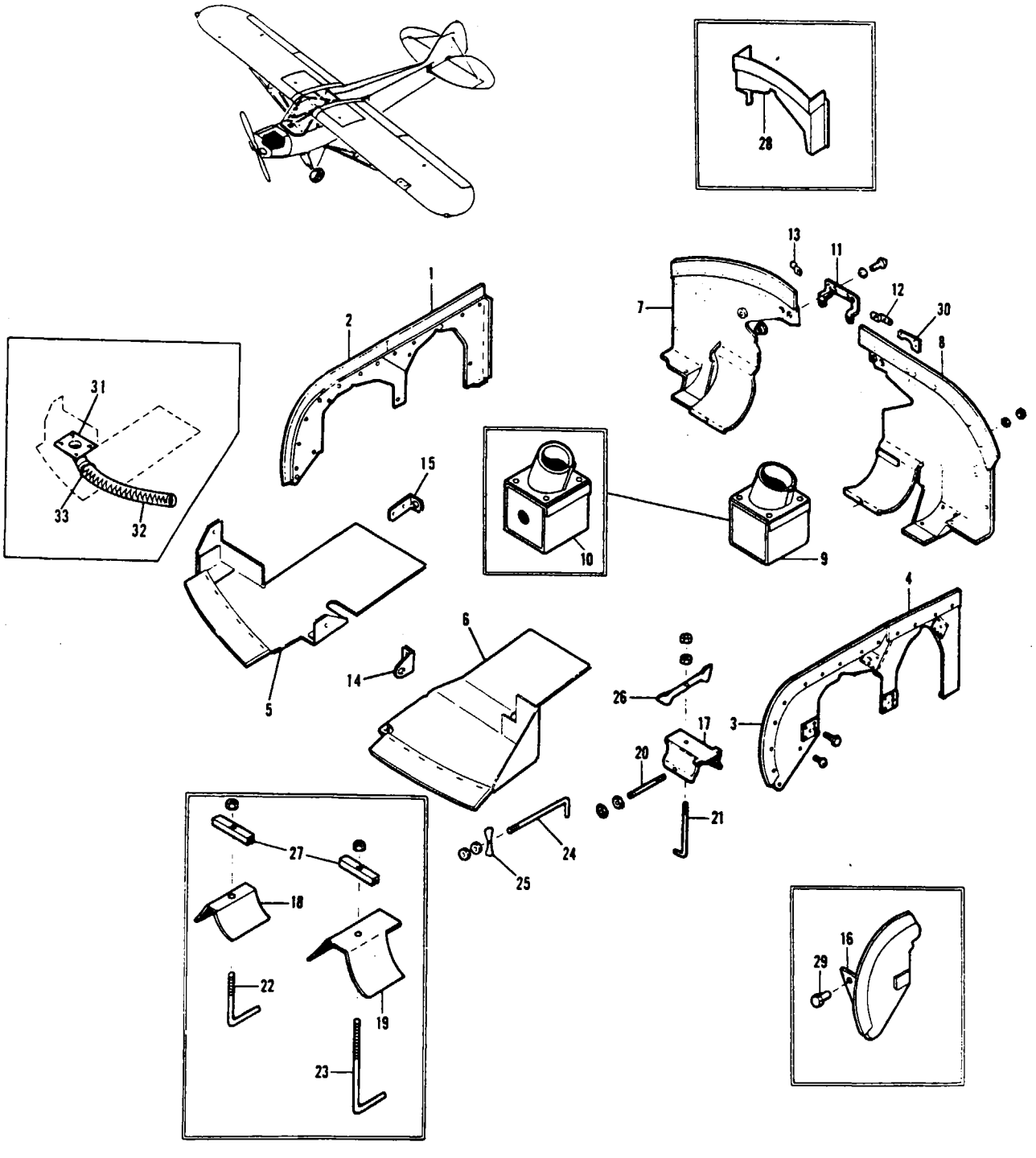

Figure 34. Baffles Installation
Lycoming and Continental

PIPER PARTS CATALOG

Figure and Index Number	Part Number	Code	NOMENCLATURE	No. Req.	SERIAL NUMBERS AFFECTED
34-1	12424-00		BAFFLE ASSEMBLY - Side, rear right	1	
	10830-05	B	BAFFLE ASSEMBLY - Side, rear right	1	
	14455-00		BAFFLE - Engine, side, right rear, “150”	1	
-2	10832-00	B	BAFFLE ASSEMBLY - Side, front right	1	
	12425-00	A	BAFFLE ASSEMBLY - Side, front right	1	
	14456-00		BAFFLE - Engine, side, right front. “150”	1	
-3	12426-00	A	BAFFLE ASSEMBLY - Side, front left	1	
	10835-00	B	BAFFLE ASSEMBLY - Side, front left	1	
	14452-00		BAFFLE - Engine, side, left front “150”	1	
-4	12427-00	A	BAFFLE ASSEMBLY - Side, rear left	1	
	10830-00	B	BAFFLE ASSEMBLY - Side, rear left	1	
	14457-00		BAFFLE - Engine, side, left rear, “150”	1	
-5	12749-00		BAFFLE ASSEMBLY - Front right, “105” and “125”	1	
	12749-05	C	BAFFLE ASSEMBLY - Front right, “135”	1	
	11283-00	B	BAFFLE ASSEMBLY - Front right	1	
	14439-00	D,E	BAFFLE ASSEMBLY - Front right, “150”	1	
	14439-07		BAFFLE ASSEMBLY - Front right, “150” (with 50 amp generator)	1	18-7409056 to 18-7409139 incl.
	15529-02	F	BAFFLE ASSEMBLY - Front right, “150” (with 60 amp alternator)	1	18-7409140 and up
-6	12428-00		BAFFLE ASSEMBLY - Front left, “105” and “125”	1	
	12428-04	C	BAFFLE ASSEMBLY - Front left, “135”	1	
	11282-00	B	BAFFLE ASSEMBLY - Front left	1	
	14440-00		BAFFLE - Engine, left front, “150”	1	
-7	12367-00		BAFFLE ASSEMBLY - Rear right, “105” and “125”	1	
	12367-06		BAFFLE ASSEMBLY - Rear right, “135”	1	
	434 142	G	GROMMET - Rear baffle	1	
	12319-06	B	BAFFLE ASSEMBLY - Rear right (used only when shielded ignition is installed)	1	
	12319-00	B	BAFFLE ASSEMBLY - Rear right (used only when shielded ignition is not installed)	1	
	14188-00	C	BAFFLE ASSEMBLY - Rear right, “125”	1	
	14458-00		BAFFLE ASSEMBLY - Engine, right rear, “150”	1	18-3781 to 18-7595 inclusive
	14458-05		BAFFLE ASSEMBLY - Engine, right rear, “150”	1	18-7596 and up
-8	12368-00		BAFFLE ASSEMBLY - rear left, “105”	1	
	12368-05		BAFFLE ASSEMBLY - Rear left, “125”	1	
	13744-00	C	BAFFLE ASSEMBLY - Rear left, “135”	1	
	434 142	G	GROMMET - Rear baffle	1	
	11797-05	B	BAFFLE ASSEMBLY - Rear left (used only with C-90-12F engine)	1	
	11797-09	B	BAFFLE ASSEMBLY - Rear left (used only with C-90-8F engine when shielded ignition is installed)	1	
	11797-06	B	BAFFLE ASSEMBLY - Rear left (used only with C-90-8F engine when shielded ignition is not installed)	1	
	14467-00		BAFFLE - Engine, left rear, “150”	1	18-3781 to 18-7595 inclusive
	14467-05		BAFFLE - Engine, left rear, “150”	1	18-7596 and up
	14467-07		BAFFLE - Engine, left rear, “150” (with 60 amp alternator)	1	18-7409140 and up

A - Used with the Lycoming engines only, “105”, “125” and “135”.
B - Used with the Continental engines only.
C - Also used on PA-18 and PA-18A Model “125” airplanes when Model 89-2000 floats are installed.
D - See Figure 40B if 35 amp generator is installed.
E - Used if oil cooler hose is routed thru right front baffle.
F - Used if oil cooler hose is not routed thru right front baffle.
G - Used on PA18-135 and PA18A-135. See latest revision of Piper Service Bulletin 121.

When ordering, always specify Part Number, Description, and Serial Number of Aircraft

Figure and Index Number	Part Number	Code	NOMENCLATURE	No. Req.	SERIAL NUMBERS AFFECTED
34-9	11491-00	A,B	BAFFLE ASSEMBLY - Oil well (used only with C-90-8F engine)	1	
	12229-00	A,B	BAFFLE ASSEMBLY - Oil well (used with C-90-12F engine)	1	
-10	11951-07		BAFFLE ASSEMBLY - Engine oil well, "105"	1	
-11	10175-00	C	BRACKET - Rear baffle support	1	
-12	11279-03	A,B	BRACKET - Support, rear left (used only with C-90-12F engine)	1	
	11279-00	A,B	BRACKET - Support, rear left (used only with C-90-8F engine)	1	
-13	11279-04	A,B	BRACKET - Support, rear right (used only with C-90-12F engine)	1	
	11279-02	A,B	BRACKET - Support, rear right (used only with C-90-8F engine)	1	
-14	11278-00	A,B	BRACKET - Support, front left	1	
-15	13010-00	A,B	BRACKET - Support, front right	1	
-16	13587-00	D	BRACKET - Support, left front and side baffle, "135"	1	
-17	74912-00	C	BAFFLE - Intercylinder	2	
		E	BAFFLE - Intercylinder, "150"	2	
-18	10923-00	A,B	BAFFLE - Intercylinder, outer	2	
-19	10922-00	A,B	BAFFLE - Intercylinder, inner	2	
-20	10487-00	C	ROD - Tie	2	
	14513-00		ROD - Tie, connecting front and rear baffles, "150"	2	
-21	71451-03	C	ROD - Tie, intercylinder	2	
-22	71451-03	A,B	ROD - Tie, intercylinder, outer	2	
-23	71451-10	B	ROD - Tie, intercylinder, inner	2	
-24	71451-08	C	ROD - Tie, front baffle	2	
-25	10415-02	C	SUPPORT - Front baffle hanger, outside, 3" lg.	2	
-26	10415-03	C	SUPPORT - Intercylinder baffle hanger	2	
		E	SUPPORT - Intercylinder baffle hanger, "150"	2	
-27	10920-00	A,B	SUPPORT - Baffle hanger	4	
-28	11329-00	A,B	BAFFLE ASSEMBLY - Rear center	1	
-29	480 932	D	PLUG - Lock, baffle support bracket, left front and side, "135"	1	
-30	15158-00		PLATE - Baffle reinforcement, "150"	1	18-7596 and up
	15530-02	G	PLATE - Baffle reinforcement, "150"	1	18-7409140 and up
-31	11280-00	F	TAKE-OFF ASSEMBLY - Engine baffle	1	18-7409056 to 18-7409139 incl.
-32	10525-51	F	HOSE - Flexible	1	18-7409056 to 18-7409139 incl.
-33	554 892	F	CLAMP - (SAE TY A-15/16)	2	18-7409056 to 18-7409139 incl.

A - Used on PA-18 airplanes with serial numbers 18-1 and up.
B - Used with the Continental engines only.
C - Used with the "105", "125" and "135" Lycoming engines only.
D - Used on PA-18 and PA-18A airplanes with serial numbers 18-2144, 18-2145, 18-2150 to 18-3770 inclusive.
E - Not available through Piper Aircraft Corporation. Secure from Lycoming, Division-Avco Corporation, Williamsport, Pennsylvania.
F - Used if 50 amp generator is installed.
G - Used if 60 amp alternator is installed.

1 G4

INTENTIONALLY LEFT BLANK

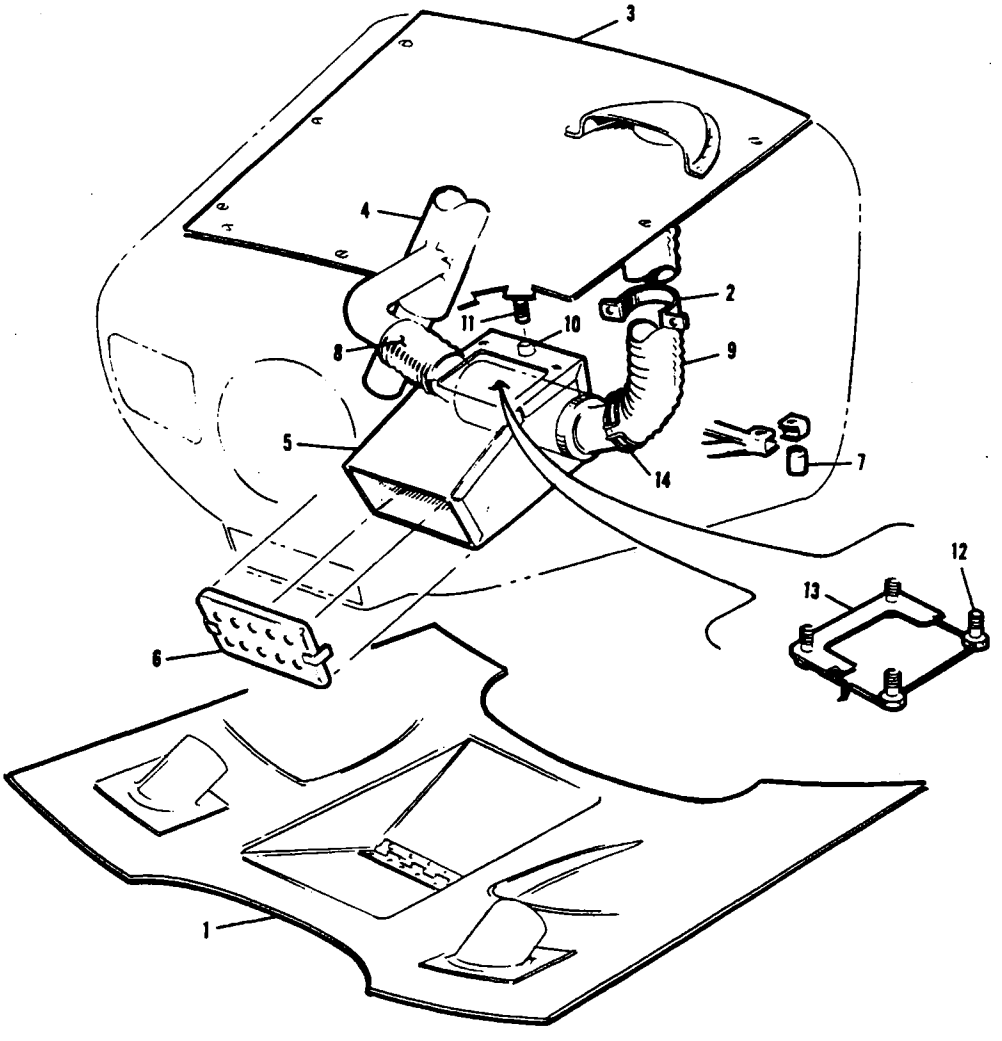

Figure 34A. Special Carburetor Air Box Installation

Figure and Index Number	Part Number	Code	NOMENCLATURE	No. Req.	SERIAL NUMBERS AFFECTED
			SPECIAL CARBURETOR AIR BOX INSTALLATION (Top cowl air scoop installation type).		
			NOTE For use only on PA-18A "135" and "150" restricted category airplanes.		
34A-	14526		DRAWING - Carburetor air box installation (special) "150"		18-3771 to 18-6963 inclusive
	SK 568		DRAWING - Carburetor air box installation (special) "135"		
-1	14543-05		COWL ASSEMBLY - Bottom, "135" and "150"	1	18-3014 to 18-6963 inclusive
	14543-04	A	COWL ASSEMBLY - Bottom, "135"	1	18-1262 to 18-6963 inclusive
-2	80222-32		CLAMP - Flexible tube, at left rear baffle, "135" and "150"	1	18-1262 to 18-6963 inclusive
-3	12356-05		COWL ASSEMBLY - Top, "135" and "150"	1	18-1262 to 18-6963 inclusive
-4	12436-13		SHROUD ASSEMBLY - Muffler, "135" and "150"	1	18-1262 to 18-6963 inclusive
-5	14535-00		BOX ASSEMBLY - Carburetor air (complete), "135" and "150"	1	18-1262 to 18-6963 inclusive
-6	14539-00		FILTER ASSEMBLY - Carburetor air, "135" and "150"	1	18-1262 to 18-6963 inclusive
-7	14175-96		BUSHING - Spacer, sprayer pump mount attachment at engine mount, "135" and "150"	2	18-1262 to 18-6963 inclusive
-8	10525-14		TUBE - Flexible, carburetor air box to tail pipe shroud "135" and "150"	1	18-1262 to 18-6963 inclusive
-9	10525-22		TUBE - Flexible, scoop in top cowl to carburetor air box, "135" and "150"	1	18-1262 to 18-6963 inclusive
-10	70371-02		FITTING ASSEMBLY - Swivel, control attachment on air box, "135" and "150"	1	18-1262 to 18-6963 inclusive
-11	70371-03		FITTING - Stud, control attachment on air box, "135" and "150"	1	18-1262 to 18-6963 inclusive
-12	10836-02		SCREW - Carburetor air box to carburetor, "135" and "150"	4	18-1262 to 18-6963 inclusive
-13	73451-03		PLATE - Carburetor air box attachment to carburetor "135" and "150"	1	18-1262 to 18-6963 inclusive
-14	554 882		CLAMP - Hose (SAE TY A-2 9/16)	2	18-1262 to 18-6963 inclusive
			A - Used on PA-18A airplanes with serial numbers 18-1812 to 18-3013 inclusive.		

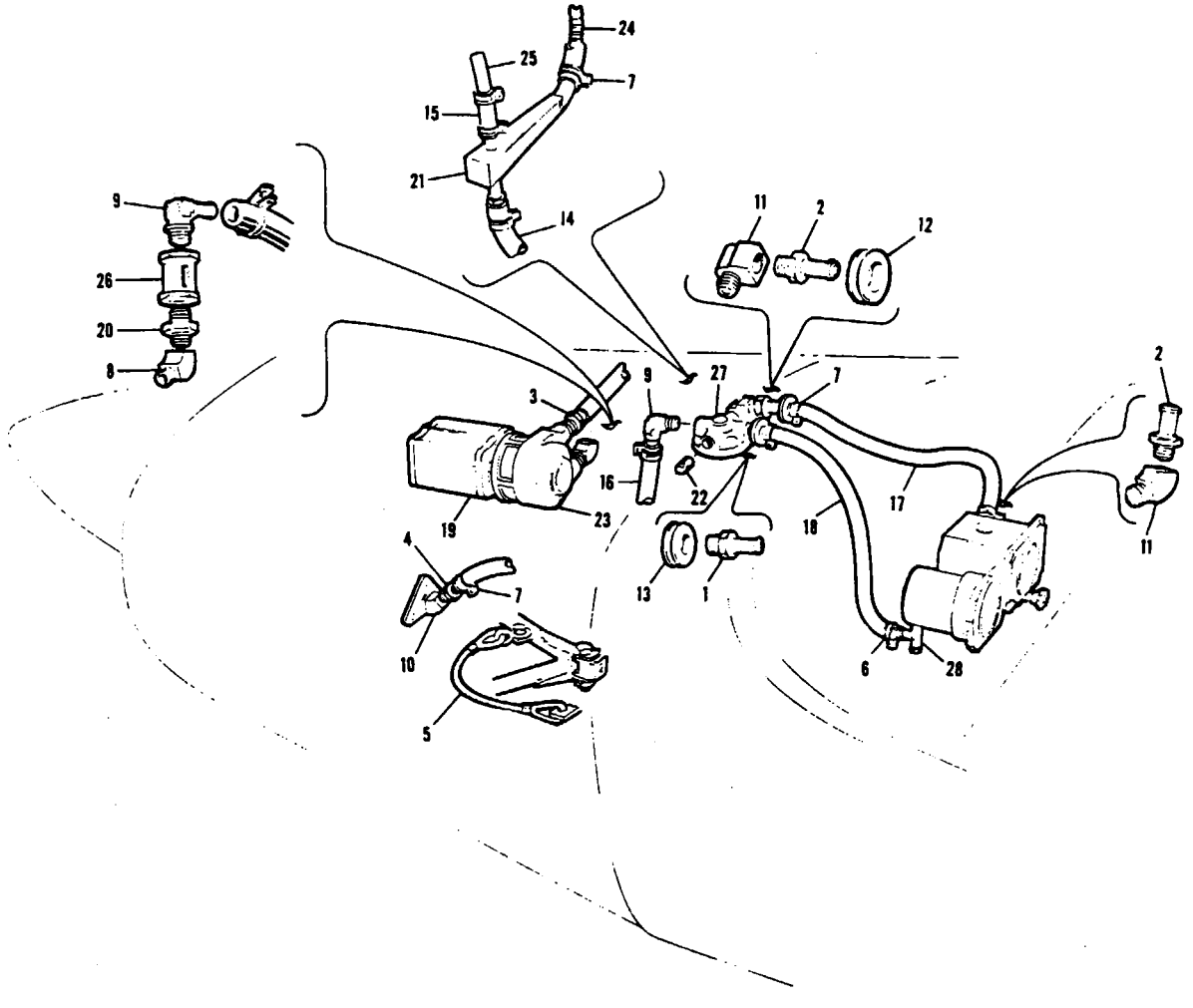

Figure 34B. Vacuum Pump Installation
(Serial Nos. 18-3461 to 18-8019 inclusive)

Figure and Index Number	Part Number	Code	NOMENCLATURE	No. Req.	SERIAL NUMBERS AFFECTED
			VACUUM PUMP INSTALLATION Model "135" and "150"		
34B-	14423		DRAWING - Vacuum pump installation, "135" and "150"		18-3461 to 18-8019 inclusive
-1	451 857		ADAPTER - (AN840-4D)	1	
-2	476 652		ADAPTER - (AN840-6D)	2	
-3	451 859		ADAPTER - (AN840-8D)	1	
-4	14404-00		ADAPTER	1	
-5	14419-00		CABLE ASSEMBLY - Engine mount stop	1	
-6	554 778		CLAMP - GS4SS Type "F"	2	
-7	554 871		CLAMP - GS6SS Type "F"	10	
-8	458 950		ELBOW - (W/H 3350 x 6)	1	
-9	14345-00		ELBOW	2	
-10	458 918		ELBOW - (AN914-3D)	1	
-11	460 661		ELBOW - (W/H 3400 x 4)	2	
-12	434 134		GROMMET - (AN931-6-10)	1	
-13	434 138		GROMMET - (AN931-10-14)	1	
-14	82371-48		HOSE ASSEMBLY - Oil separator to engine	1	
-15	82371-23		HOSE - Connecting, oil separator to discharge tube	1	
-16	82371-25		HOSE ASSEMBLY - Regulating valve to check valve and oil separator to vacuum pump	2	
-17	82371-33		HOSE ASSEMBLY - Directional gyro to regulating valve	1	
-18	82371-55		HOSE ASSEMBLY - Turn and bank to regulating valve	1	
-19	450 380		KIT - Drive, vacuum pump (#69439)	1	
-20	476 659		NIPPLE - (W/H 3326 x 6)	1	
-21	486 381		OIL SEPARATOR - (AN6121-1)	1	
-22	460 679		PLUG - (W/H 3150 x 4) regulating valve	1	
-23	481 662		PUMP - Vacuum	1	
-24	487 329		SPRING - Coil, hose reinforcing (83302-29)	2	
-25	14420-00		TUBE - Oil separator discharge	1	
-26	492 029		VALVE - Check (#2-2844-75)	1	
-27	492 059	A	VALVE - Suction regulating	1	
-28	14205-00		VALVE ASSEMBLY - Air regulating, rear of turn and bank	1	

A - Not available. Suction Regulating Valve Replacement Kit 756 764 will be supplied as a replacement. If Kit 756 764 has previously been installed, order Valve Assembly 492 065.

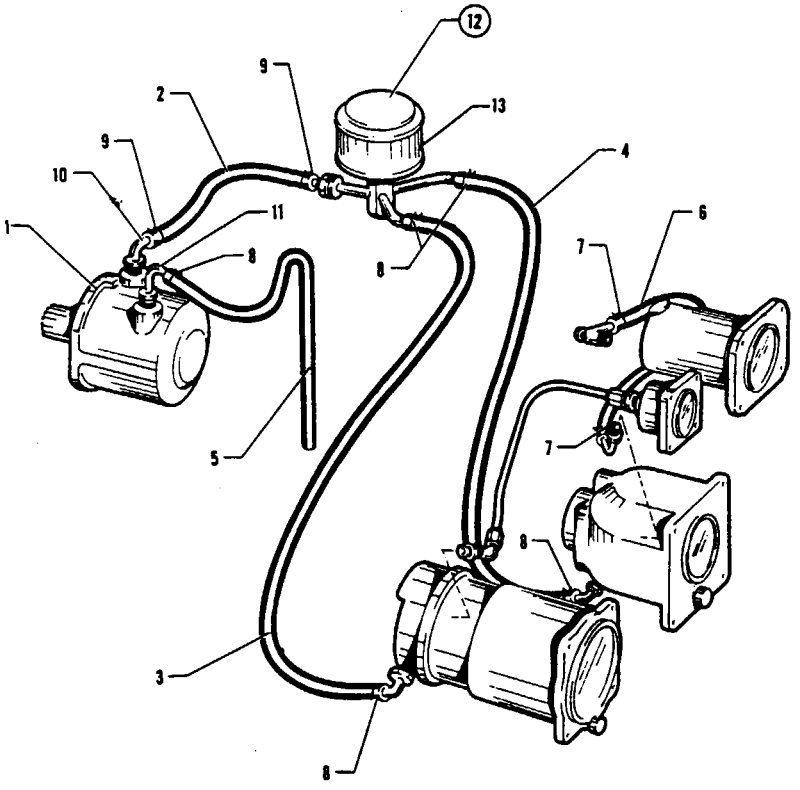

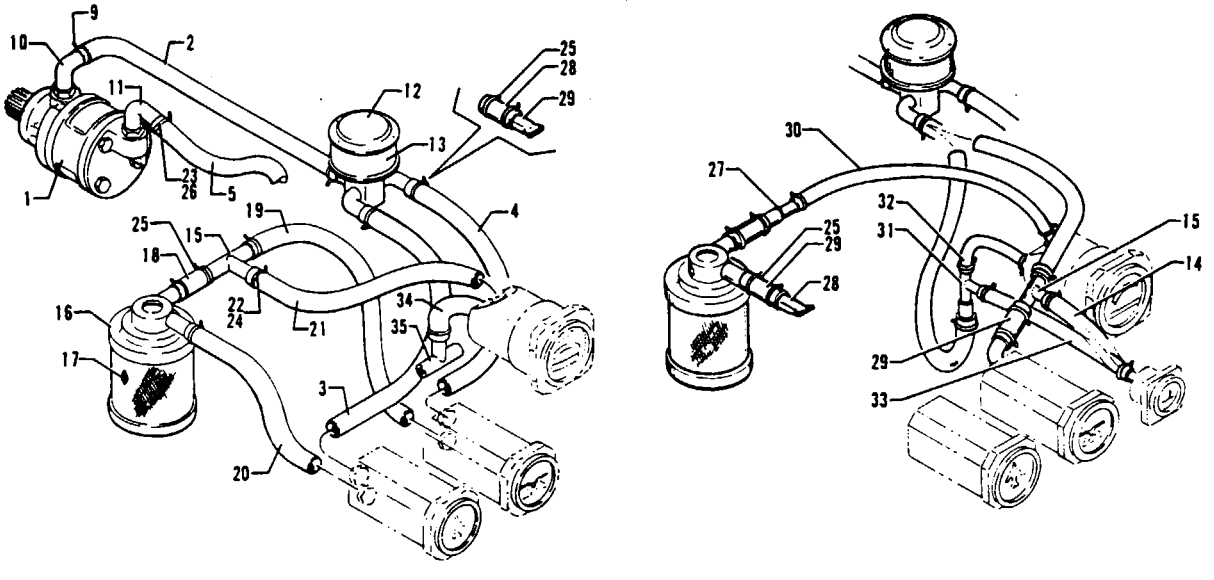

Figure 34C. Vacuum Pump Installation (Dry Vacuum Pump)
(Serial Nos. 18-8020 and up)

PIPER PARTS CATALOG

Figure and Index Number	Part Number	Code	NOMENCLATURE	No. Req.	SERIAL NUMBERS AFFECTED
34C-	15247	A	DRAWING - Vacuum Pump Installation		18-8020 to 18-7609012 incl.
	15800	B	DRAWING - Vacuum System Installation		18-7609013 and up
	60736	C	DRAWING - Vacuum System Installation		18-7809080 and up
	60737	D	DRAWING - Vacuum System Installation		18-7809080 and up
	60738	E	DRAWING - Vacuum System Installation		18-7809080 and up
	60739	F	DRAWING - Vacuum System Installation		18-7809080 and up
	60740	A	DRAWING - Vacuum System Installation		18-7809080 and up
	60741	G	DRAWING - Vacuum System Installation		18-7809080 and up
-1	481 681		PUMP - Vacuum (113A5)	1	18-8020 to 18-8166 inclusive
	26749-07		PUMP - Vacuum (211CC)	1	18-8167 and up
-2	61541-36		HOSE - Vacuum pump to regulation valve (29/32" O.D.)	1	
-3	82371-60		HOSE - Regulating valve to attitude gyro (3/4" O.D)	1	18-8020 to 18-7609065 incl.
	82371-140		HOSE - Vacuum (5/8" O.D.)	1	18-7609066 and up
-4	82371-87		HOSE - Regulating valve to directional gyro (3/4" O.D.)	1	18-8020 to 18-7609065 incl.
	82371-140		HOSE - Vacuum (5/8" O.D.)	1	18-7609066 and up
-5	82371-90		HOSE - Vacuum pump air exhaust (25/32" O.D.)	1	
-6	82371-95	A	HOSE - Turn and bank to directional gyro (1/2" O.D.)	1	18-8020 to 18-7609012 incl.
-7	454 983	A	CLAMP - Hose, (SAE TYE-8) (For 1/2" hose)	2	18-8020 to 18-7609012 incl.
-8	454 987	A	CLAMP - Hose, (SAE TYE-12) (For 3/4" and 25/32" hose)	5	18-8020 to 18-7609012 incl.
-9	554 802		CLAMP - Hose (SAE TYE-14) (For 29/32" hose)	2	
-10	458 958		ELBOW - (1K1-6-10)	1	
-11	558 900		ELBOW - (1F8-6-8)	1	
-12	492 272		VALVE - Suction regulating (2H3-23)	1	
-13	751 815		* FILTER - Regulating valve (B3-5-1)	1	
-14	16633-62	H	HOSE - Tee to suction gauge (1/2" O.D.)	1	18-7809080 and up
-15	15849-02	B G	TUBE ASSEMBLY - Tee	1	18-7609013 and up
-16	460 888		FILTER ASSEMBLY - Air (66673-00)	1	18-7609013 and up
-17	757 899		* CARTRIDGE - Air filter	1	18-7609013 and up
-18	82371-04	B	HOSE - Air filter to tee (3/4" O.D.)	1	18-7609013 to 18-7609065 incl.
	16633-80	A B C G H	HOSE - Air filter to tee (5/8" O.D.)	1	18-7609066 and up
-19	82371-43	B	HOSE - Tee to attitude gyro (3/4" O.D.)	1	18-7609013 to 18-7609065 incl.
	16633-31	B G H	HOSE - Tee to attitude gyro (5/8" O.D.)	1	18-7609066 and up
	16633-28	F H	HOSE - Air filter to attitude gyro (5/8" O.D.)	1	18-7809080 and up
-20	82371-57	B	HOSE - Air filter to directional gyro (3/4" O.D.)	1	18-7609013 to 18-7609065 incl.
	16633-24	A B D F H	HOSE - Air filter to directional gyro (5/8" O.D.)	1	18-7609066 and up
	16633-28	E H	HOSE - Air filter to attitude gyro (5/8" O.D.)	1	18-7809080 incl.
-21	82371-74	B	HOSE - Tee to turn and bank (5/8" O.D.)	1	18-7609013 to 18-7609065 incl.
	80007-38	B G H	HOSE - Tee to turn and bank (1/2" O.D.)	1	18-7609066 and up
-22	454 832	B	CLAMP - Hose (SAE TYE-10) (For 5/8" hose)	2	18-7609013 to 18-7609065 incl.
-23	454 987	B	CLAMP - Hose (SAE TYE-12) (For 3/4" and 25/32" hose)	11	18-7609013 to 18-7609065 incl.

A - Used if Directional Gyro and Turn and Bank Indicator only are installed.
B - Used if Directional Gyro, Attitude Gyro and Turn and Bank Indicator are installed.
C - Used if Turn and Bank Indicator only is installed.
D - Used if Directional Gyro only is installed.
E - Used if Attitude Gyro only is installed.
F - Used if Directional Gyro and Attitude Gyro only are installed.
G - Used if Attitude Gyro and Turn and Bank Indicator only are installed.
H - Not used on aircraft with serial numbers 18-8209001 to 18-8309025 inclusive.

When ordering, always specify Part Number, Description and Serial Number of Aircraft

PIPER PARTS CATALOG

Figure and Index Number	Part Number	Code	NOMENCLATURE	No. Req.	SERIAL NUMBERS AFFECTED
34C-24	454 983		CLAMP - Hose, (SAE TYE-8) (For 1/2" hose)	2	18-7609066 and up
-25	454 832		CLAMP - Hose, (SAE TYE-10) (For 5/8" hose)	10	18-7609066 and up
-26	454 987		CLAMP - Hose, (SAE TYE-12) (For 3/4" and 25/32" hose)	1	18-7609066 and up
-27	60744-02	A B G	TUBE ASSEMBLY - Reducer	1	18-7809080 and up
-28	60743-02	B C D E G	PLUG - Hose	2	18-7809080 and up
-29	16633-83	B C D E G	HOSE - Flexible (5/8" O.D.)	2	18-7809080 and up
-30	80007-38	A B G	HOSE - Reducer to turn and bank (1/2" O.D.)	1	18-7809080 and up
-31	60745-02	B G	TUBE ASSEMBLY - Tee	1	18-7809080 and up
	60744-02	A G	TUBE ASSEMBLY - Reducer	1	18-7809080 and up
-32	16633-62	A B G	HOSE - Tee to turn and bank (1/2" O.D.)	1	18-7809080 and up
-33	80007-39	B G	HOSE - Tee to suction gauge (1/2" O.D.)	1	18-7809080 and up
-34	16633-84	F G	HOSE - Turn and Bank to Tee	1	
-35	15849-02	F G	TUBE ASSEMBLY - Tee	1	

A - Used if Directional Gyro and Turn and Bank Indicator only are installed.
B - Used if Turn and Bank Indicator only is installed.
C - Used if Directional Gyro only is installed.
D - Used if Attitude Gyro only is installed.
E - Used if Attitude Gyro and Turn and Bank Indicator only are installed.
F - Used if Directional Gyro, Attitude Gyro and Turn and Bank Indicator are installed.
G - Not used on aircraft with serial numbers 18-8209001 to 18-8309025 inclusive.

When ordering, always specify Part Number, Description and Serial Number of Aircraft

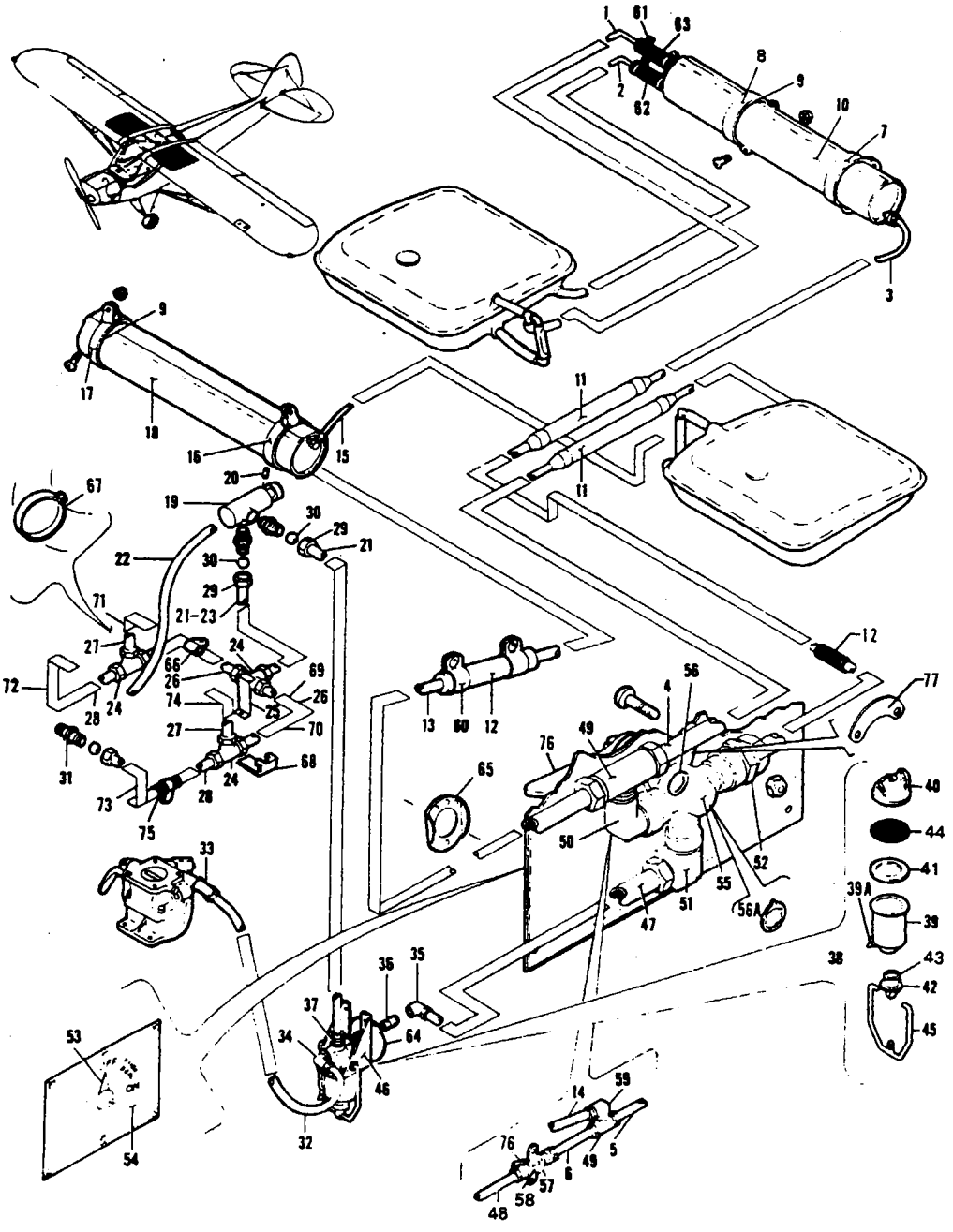

Figure 35. Fuel System Installation

PIPER PARTS CATALOG

Figure and Index Number	Part Number	Code	NOMENCLATURE	No. Req.	SERIAL NUMBERS AFFECTED
35-	13766		DRAWING - Fuel Tank Installation, “135” and “150”		
	11298	A,B	DRAWING - Fuel System		
	12544	H	DRAWING - Fuel Tank Installation, “95”, “105” and “125”		
	12458	C,D	DRAWING - Fuel System		
	14217	D,G	DRAWING - Fuel System		
	14213	E	DRAWING - Fuel System		
	14469		DRAWING - Fuel System Installation, “135” and “150”		(PA-18 only} 18-3771,18-3781 and up
	14473		DRAWING - Fuel System Installation		(PA-18A only) 18-3771,18-3786 and up
-1	11987-17	D	LINE ASSEMBLY - Vent	1	(PA-18 only) 18-1 to 18-3013
	11987-39	D,F	LINE ASSEMBLY - Vent	1	
	14207-02	D	LINE ASSEMBLY - Vent, top of fuel gauge to rear header tank (right tank)	1	(PA—18 only) 18-3014 and up
	14204-00		LINE ASSEMBLY - Vent, top of fuel gauge to rear header tank (right tank)	1	(PA-18A only) 18-3014 and up
-2	11987-13	D	LINE ASSEMBLY - Fuel	1	(PA-18 only) 18-1 to 18-3013
	11987-37	D,F	LINE ASSEMBLY - Fuel	1	
	14208-02	D	LINE ASSEMBLY - Fuel, rear of right wing tank to rear header tank	1	(PA-18 only) 18-3014 and up
	14203-00		LINE ASSEMBLY - Fuel, rear of right wing tank to rear header tank	1	(PA-18A only) 18-3014 and up
-3	11973-05	D	LINE ASSEMBLY - Fuel	1	(PA-18 only) 18-1 to 18-3013 incl.
	11973-07	D,F	LINE ASSEMBLY - Fuel	1	
	14210-00		LINE ASSEMBLY - Fuel, rear header tank to fuel valve	1	(PA-18A only) 18-3014 and up
	14209-02	D	LINE ASSEMBLY - Fuel, rear header tank to fuel valve	1	(PA-18 only) 18-3014 and up
-4	11300-03	D	LINE ASSEMBLY - Fuel	2	
-5	11300-00	A,B	LINE ASSEMBLY - Fuel	1	
-6	11301-00	A,B	LINE ASSEMBLY - Fuel	1	
-7	12836-02	D	CLAMP - Rear header tank, LH	1	(PA-18 only)
	12836-04	D	CLAMP - Rear header tank, LH	1	(PA-18A only)
-8	12836-03	D	CLAMP - Rear header tank, RH	1	(PA-18 only)
	10466-13	D	CLAMP - Rear header tank, RH	1	(PA-18A only)

A - Used on PA-18 airplanes with serial numbers 18-1 to 18-4617 inclusive and PA-18A airplanes with serial, numbers 18-1215 to 18-1969 inclusive.
B - Used on airplanes when fuel tank is installed in left wing only.
C - Used on PA-18 airplanes with serial numbers 18-1 to 18-3013 inclusive and PA-18A airplanes with serial numbers 18-1215 to 18-3013 inclusive.
D - Used when fuel tank is installed in right wing panel.
E - Used on PA-18A airplanes with serial numbers 18-3014 to 18-3770 inclusive, and 18-3772 to 18-3785 inclusive.
F - Used on PA-18A airplanes with serial numbers 18-1215 to 18-3013 inclusive.
G - Used on PA-18 “95” airplanes 18-3014 and up and PA-18 “135” airplanes 18-3014 to 18-3770 inclusive, and 18-3772 to 18-3780 inclusive.
H - See latest revision of Piper Service Bulletin 522.

When ordering, always specify Part Number, Description, and Serial Number of Aircraft

PIPER PARTS CATALOG

Figure and Index Number	Part Number	Code	NOMENCLATURE	No. Req.	SERIAL NUMBERS AFFECTED
35-9	180 497		FELT - SAE F-50, header tank clamp (38" per ship when fuel tank is installed in right wing)	19"	
-10	12837-00	A	TANK ASSEMBLY - Header, rear	1	18-1 to 18-3013 inclusive
	89386-02		TANK ASSEMBLY - Header, rear	1	18-3014 and up
-11	189 534		DUCT - Plane, 563" x 10" (2 per ship when fuel tank is installed in right wing)	1	
-12	82371-04		HOSE - Flexible	2	
-13	11987-15	A	LINE ASSEMBLY - Fuel	1	
-14	10143-52	B,C	LINE ASSEMBLY - Fuel	1	
-15	11987-23		LINE ASSEMBLY - Vent	1	18-469 and up
	11987-05		LINE ASSEMBLY - Vent	1	18-1 to 18-468 inclusive
-16	11299-02		CLAMP ASSEMBLY - Header tank, LH	1	
-17	11299-06		CLAMP ASSEMBLY - Header tank, RH	1	
-18	60763-02	F	TANK ASSEMBLY - Header, front	1	
-19	451 103	V	PUMP - Primer, Kohler (K-2406-SAE-2)	1	
-20	80012-65		BUSHING - Primer pump spacer (used only with Lunkendeimer primer)	1	
-21	10143-63		LINE ASSEMBLY - Primer outlet, "105", "125", "135" and "150" (44" long)	1	
	10143-97		LINE ASSEMBLY - Primer inlet "105", "125", "135" and "150" (55" long)	1	
-22	71242-09		LINE ASSEMBLY - Primer outlet, "95"	1	
-23	71242-08		LINE ASSEMBLY - Primer inlet, "95"	1	
-24	460 652		TEE - Primer line, W/H 702 x 2, "105", "125", "135" and "150"	3	
-25	12870-00		BRACKET - Primer line support, "105", "125" and "135"	1	
-26	11987-09	G	LINE ASSEMBLY - Primer, "105", "125" and "135"	2	
-27	10143-61	G	LINE ASSEMBLY - Primer, "105, "125" and "135"	2	
-28	10143-20	G	LINE ASSEMBLY - Primer, "105", "125" and "135"	2	
-29	460 684		FITTING - Compression nut W/H No. W61 x 2 (with Kohler primer pump)	2	
-30	460 683		FITTING - Compression sleeve, W/H No. W60 x 2 (with Kohler primer pump)	2	
-31	468 340		JET - Primer, (4) per ship, "105", "125", "135" and "150" (1) per ship, "95"	4	
-32	17766-65	D	LINE ASSEMBLY - Fuel "95", "105", "125", "135" and "150"	1	18-7840 and up
-33	460 659	E	ELBOW - W/H No. 352 x 6 x 45, " 105", " 125", " 135" and "150"	1	18-1 to 18-7839 inclusive
	458 892		ELBOW - (AN823-6D) "105", "125", "135" and "150"	1	18-7840 and up
	460 654	E	ELBOW - W/H 400 x 6, "95"	1	18-1 to 18-7839 inclusive
	458 892		ELBOW - (AN823-6D) "95"	1	18-7840 and up
-34	460 661	E	ELBOW - Street, W/H No. 3400 x 4, "105", "125", "135" and "150"	1	18-1 to 18-7839 inclusive
	458 895		ELBOW - (AN822-6D) "105", "125", "135" and "150"	1	18-7840 and up

A - Used when fuel tank is installed in the right wing panel.
B - Used on PA-18 airplanes with serial numbers 18-1 and up and on PA-18A airplanes with serial numbers 18-1215 to 18-1969 inclusive.
C - Used on airplanes when fuel tank is installed in left wing only.
D - When ordering for airplanes with serial numbers 18-1 to 18-7839, Installation Kit 754 438 must also be ordered.
E - If Kit 754 438 has been installed, order parts for serial numbers 18-7840 and up.
F - See latest revision of Piper Service Bulletin 868 for serial numbers 18-1 to 18-8109086.
G - See latest revision of Piper Service Letter 213.
V - These parts must be ordered from Service Spares Department, Piper Aircraft Corporation, Vero Beach, Florida.

When ordering, always specify Part Number, Description, and Serial Number of Aircraft

PIPER PARTS CATALOG

Figure and Index Number	Part Number	Code	NOMENCLATURE	No. Req.	SERIAL NUMBERS AFFECTED
35-35	460 689		ELBOW - Female inverted, W/H No. 450 x 6	1	
-36	476 640		NIPPLE -1/4 NPT Brass	1	
-37	460 651		CONNECTOR - Inverted, W/H No. 200 x 2	1	
-38	14330-02		STRAINER ASSEMBLY - Fuel, E -Z drain	1	
-39	12764-00		* BOWL - Fuel strainer, E-Z drain	1	
-39a	492 022		* * DRAIN - (E-Z)	1	
-40	14428-00		* COVER - Fuel strainer	1	
	87477-02		* COVER - Fuel strainer	1	
-41	85012-32		* GASKET - Fuel strainer	1	
-42	72302-03		* NUT - Fuel strainer bowl seat	1	
-43	750 273		* SEAT - Fuel strainer bowl	1	
-44	89131-02		* SCREEN - Fuel strainer	1	
-45	100871-02		* WIRE ASSEMBLY - Bail, nut and seat	1	
-46	71991-00		BRACKET ASSEMBLY - Fuel strainer mounting	1	
-47	10729-03	A	LINE ASSEMBLY - Fuel	1	
-48	10729-00	B,C	LINE ASSEMBLY - Fuel	1	
-49	488 374		TEE - Inverted, W/H No. 600 x 6	1	
-50	460 661	A	ELBOW - Street, W/H No. 3400 x 4	1	
-51	460 654	A	ELBOW - W/H No. 400 x 6	1	
-52	460 653	A	CONNECTOR - Inverted, W/H No. 200 x 6	1	
-53	12857-00		POINTER - On and off	1	18-1 to 18-7809091
-54	12838-02	A	PLATE - Fuel, on and off indicator	1	
	12838-03	B,D	PLATE - Fuel, on and off indicator	1	
-55	11383-03	A,G,L	VALVE ASSEMBLY - Fuel (492 016)	1	18-1 to 18-7909039 incl.
	77413-02	J,M	VALVE ASSEMBLY - Fuel	1	18-7909040 and up
-56	752 692	E,H	* GASKET - Fuel valve	1	
	752 822	F,H	* O-RING - (N0674-70)	1	
	762 627	K	* O-RING	1	
-56a	756 645	H	* WASHER - Fuel valve	1	
-56b	484 953	K	* O-RING - (MS29513-011)	1	
-57	492 014	B,C	VALVE - Fuel, shut-off	1	
-58	752 692	E	* GASKET - Fuel valve	2	
	752 822	F	* O-RING	1	
-59	460 689	B	ELBOW - Female inverted, W/H 450 x 6	1	
-60	554 871		CLAMP - (SAE TY F-6SS) (6 per ship when fuel tank is installed in right wing)	2	
-61	554 778	A	CLAMP - (SAE TY F-4SS) vent line rear header tank	2	
-62	82371-36	A	HOSE - Fuel lines to rear header tank	2	
-63	82371-37	A	HOSE - Vent line to rear header tank	1	

A - Used when fuel tank is installed in the right wing panel.
B - Used when fuel tank is installed in the left wing only.
C - Used on PA-18 airplanes with serial numbers 18-1 and up and on PA-18A airplanes with serial numbers 18-1215 to 18-1969 inclusive.
D - Used on PA-18 airplanes with serial numbers 18-1 and up and on PA-18A airplanes with serial numbers 18-1215 to 18-3013 inclusive.
E - Used with fuel valves which have a brass plug.
F - Used with fuel valves which have a nickle silver plug.
G - No longer available. Order one (1) Fuel Valve Replacement Kit P/N 764 295 as a replacement. See latest revision orf Piper Service Bulletin 354B.
H - Used on Valve Part Number 11383-03 only.
J - Also used on aircraft with serial numbers 18-1 to 18-7909039 inclusive if Fuel Valve Replacement Kit 764 295 has been installed.
K - Component of Valve P/N 77413-02 only.
L - See latest revision of Piper Service Letter 233.
M - See latest revision of Piper Service Letter 944 for serial numbers 18-7909040 to 18-8109086.

When ordering, always specify Part Number, Description, and Serial Number of Aircraft

PIPER PARTS CATALOG

Figure and Index Number	Part Number	Code	NOMENCLATURE	No. Req.	SERIAL NUMBERS AFFECTED
35-64	80122-67		WASHER - Fuel line installation at firewall	1	
-65	14307-00	A	WASHER - Fuel valve attachment "95"	1	
-66	80032-69		CLAMP - Primer lines attachment on engine "150"	4	
-67	18307-00		CLAMP - Primer line attachment to intake manifold tubes, right and left, "150"	2	
-68	14470-00		BRACKET - Mounting, primer line tees, "150"	3	
-69	11987-55		LINE - Primer, from tee at left rear back of engine to tee at right rear side of engine, "150"	1	
-70	11987-57		LINE PRIMER - From tee to left rear back of engine to tee at left rear side engine, "150"	1	
-71	10143-18		LINE - Primer, from tee at right rear side engine to right rear cylinder, "150"	1	
-72	11987-61		LINE - Primer, from tee at right rear side of engine to right front cylinder, "150"	1	
-73	10143-91		LINE - Primer, from tee at left rear side of engine to left front cylinder, "150"	1	
-74	10143-95		LINE - Primer, from tee at left rear side of engine to left rear cylinder, "150"	1	
-75	90797-02		SLEEVE - Primer line attachment at left front cylinder, "150"	1	
-76	464 016		HANDLE - Fuel valve	1	18-1 to 18-7809091 inclusive
	61964-02		HANDLE - Fuel valve	1	18-7809092 and up
-77	60756-02		SPACER - Fuel selector	1	

A - Used on PA-18 "95" airplanes with serial numbers 18-3313 and up when fuel tank is installed in left wing only.

When ordering, always specify Part Number, Description and Serial Number of Aircraft

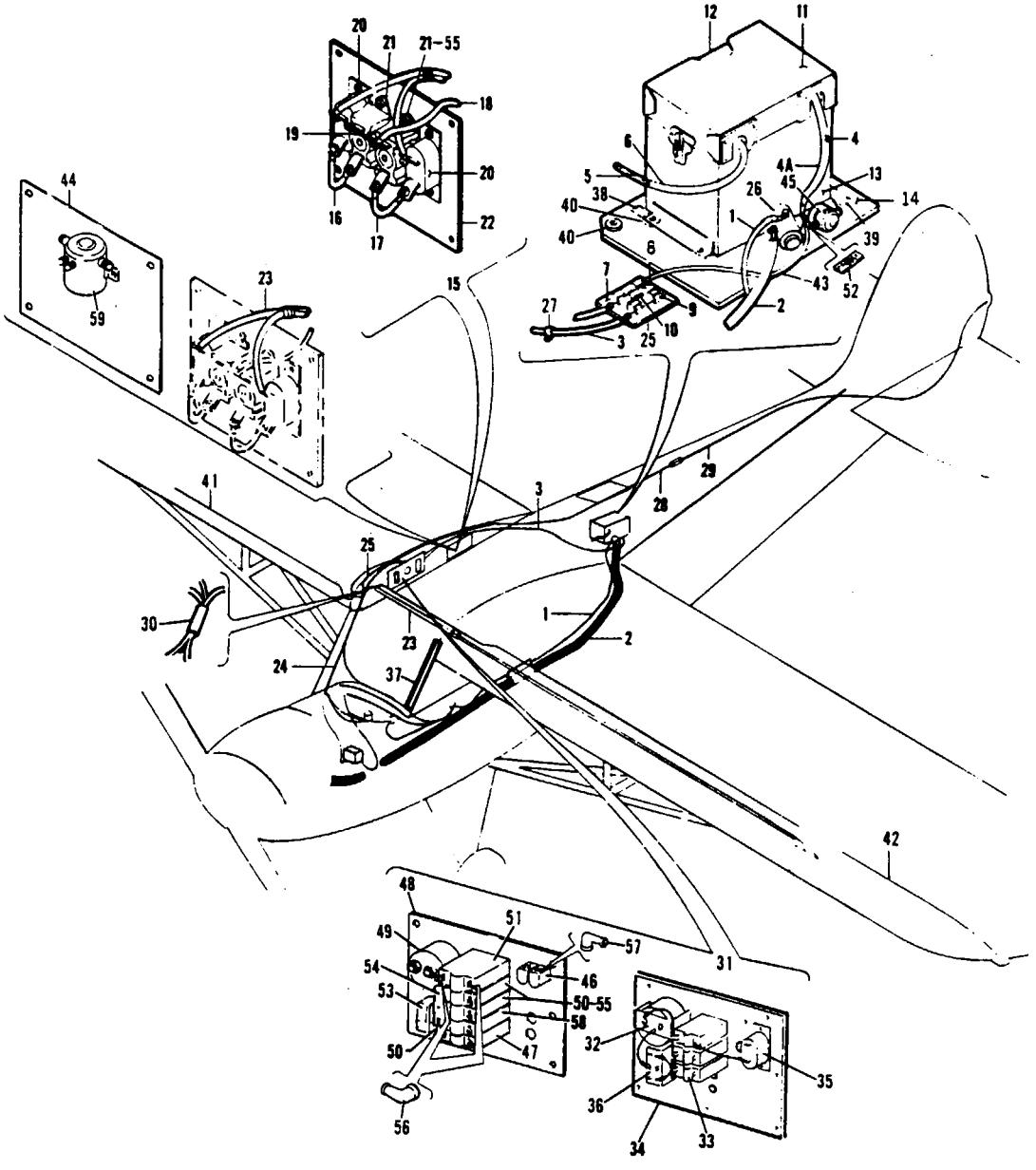

Figure 36. Electrical System Installation

PIPER PARTS CATALOG

Figure and Index Number	Part Number	Code	NOMENCLATURE	No. Req.	SERIAL NUMBERS AFFECTED
36-	12302		DRAWING - Electrical System Installation (Rev. "A" to "O" inclusive)		18-1 to 18-664 inclusive
	12302		DRAWING - Electrical System Installation (Rev. "P" to "T" inclusive)		18-665 to 18-1214 inclusive
	12302		DRAWING - Electrical System Installation (Rev. "U" and up)		18-1215 to 18-3013 inclusive
	14241		DRAWING - Electrical System Installation		18-3014 to 18-7409139 inclusive
	15500		DRAWING - Electrical System Installation		18-7409140 and up
-1	12177-87	A	WIRE ASSEMBLY - "95"	1	
	12177-88	A	WIRE ASSEMBLY - "125" and "135"	1	
	12177-40		WIRE ASSEMBLY - "95"	1	(PA-18 only) 18-1 to 18-664
	12177-29		WIRE ASSEMBLY - Solenoid to starter switch on instrument panel, "105" and "125"	1	(PA-18 only) 18-1 to 18-664
-2	11134-07	A	CABLE ASSEMBLY	1	
	11134-05		CABLE ASSEMBLY	1	(PA-18 only) 18-1 to 18-664
	14226-02		CABLE ASSEMBLY - Solenoid to starter	1	(PA-18 only) 18-3014 and up
	14226-03		CABLE ASSEMBLY - Solenoid to starter	1	(PA-18A only) 18-3014 and up
-3	12298-00	C	HARNESS ASSEMBLY - Wire	1	
	12298-08	A	HARNESS ASSEMBLY - Wire	1	
	12298-16		HARNESS ASSEMBLY - Wire, battery to master switch panel assembly, "95"	1	(PA-18 only) 18-3014 and up
	14223-02		HARNESS ASSEMBLY - Wire, battery to master switch panel assembly, "135" and "150"	1	(PA-18 only) 18-3014 to 18-7409055 inclusive
	15332-02		HARNESS ASSEMBLY - Wire, battery to master switch panel assembly, "150"	1	18-7409056 to 18-7409139 incl.
	15503-02		HARNESS ASSEMBLY - Battery to master switch panel, assembly, "150"	1	18-7409140 and up
	14223-03		HARNESS ASSEMBLY - Wire, battery to master switch panel, assembly, "135" to "150"	1	(PA-18A only) 18-3014 and up
-4	11134-04		CABLE ASSEMBLY	1	(PA-18 only) 18-1 to 18-664 incl.
	11134-00	A	CABLE ASSEMBLY	1	
	14224-12		CABLE ASSEMBLY - Battery to solenoid	1	(PA-18 only) 18-3014 and up
-4a	189 080		* DUCT - Type S.P. 1/2" I.D.	6"	(PA-18 only) 18-3014 and up
-5	14160-02		CABLE ASSEMBLY	1	(PA-18 only) 18-1 to 18-3013
	17604-30		CABLE ASSEMBLY - Battery ground	1	(PA-18 only) 18-3014 and up
-6	189 080		* DUCT - Type S.P. 1/2" I.D.	6-½"	(PA-18 only) 18-1 to 18-3013
-7	11718-00		BLOCK ASSEMBLY - Fuse	1	(PA-18 only) 18-1 to 18-1214
	13051-00		BLOCK ASSEMBLY - Fuse	1	18-1215 to 18-7409139 incl.
-8	90797-10		SLEEVE - Insulating	1	18-1 to 18-7409139 inclusive
-9	10438-00		JUMPER	1	18-1 to 18-7409139 inclusive
-10	461 624		FUSE - (No. 3AG30 AMP)	3	18-1 to 18-7409139 inclusive
-11	12280-00		COVER ASSEMBLY - Battery box	1	(PA-18 only) 18-1 to 18-664
	12045-00	B	COVER ASSEMBLY - Battery box	1	
	13575-00	D	COVER ASSEMBLY - Battery box	1	
	14065-00	E	COVER ASSEMBLY - Battery box	1	

A - Used on PA-18 airplanes with serial numbers 18-665 to 18-3013 inclusive.
B - Used on PA-18 airplanes with serial numbers 18-665 to 18-1214 inclusive.
C - Used on PA-18 airplanes with serial numbers 18-1 to 18-664 inclusive and PA-18A airplanes with serial numbers 18-1262 to 18-3013 inclusive.
D - Used on PA-18 airplanes with serial numbers 18-1215 to 18-2849 inclusive and 18-2851 to 18-2856 inclusive.
E - Used on PA-18 airplanes with serial numbers 18-2850, 18-2857 and up.

When ordering, always specify Part Number, Description and Serial Number of Aircraft

PIPER PARTS CATALOG

Figure and Index Number	Part Number	Code	NOMENCLATURE	No. Req.	SERIAL NUMBERS AFFECTED
36-12	460 026		BATTERY - Reading (No S-2412V)	1	(PA-18 only) 18-1 to 18-1214
	460 036		BATTERY - Reading (No R-36-12V)	1	18-1216 and up
-13	12044-08		BOX ASSEMBLY - Battery	1	(PA-18 only) 18-1 to 18-664
	13182-00	B	BOX ASSEMBLY - Battery	1	
	13574-00	C	BOX ASSEMBLY - Battery	1	
	14064-00	A	BOX ASSEMBLY - Battery	1	
-14	16312-00		BOARD - Mounting	1	
-16	12812-00		PANEL ASSEMBLY - Landing light switch	1	18-1 to 18-7409139 inclusive
-16	12177-32		WIRE ASSEMBLY - Jumper (No 41)	1	18 1 to 18-7409139 inclusive
-17	10128-78		WIRE ASSEMBLY - Jumper (No 42)	1	18-1 to 18-7409139 inclusive
-18	12177-71		WIRE ASSEMBLY - To ammeter	1	18-1 to 18-7409139 inclusive
-19	10438-00		JUMPER	1	18-1 to 18-7409139 inclusive
-20	487 778		SWITCH - (AN3022-2)	2	18-1 to 18-7409139 inclusive
-21	464 667		CIRCUIT BREAKER - (PS50120-3-12) 10 amp	2	18-1 to 18-7409139 inclusive
-22	12807-00		PANEL	1	18-1 to 18-7409139 inclusive
-23	12298-11	D	HARNESS ASSEMBLY - Wire landing light switch to wing root	1	
	12298-06	E	HARNESS ASSEMBLY - Wire landing light switch to wing root	1	
-24	14798-00		HARNESS ASSEMBLY - Wire (voltage regulator starter switch and generator) “150” “125”, “135”” and “150” (when radio is not installed)	1	18-1 to 18-7409066 inclusive
	12299-02		HARNESS ASSEMBLY - Wire (voltage regulator starter switch and generator) “95”	1	18-1 to 18-3013 inclusive
	16047-00		HARNESS ASSEMBLY-Wire switch panel to voltage regulator and generator “95” (when radio is not installed)	1	18-3014 and up
	14338-02		HARNESS ASSEMBLY - Wire (voltage regulator starter switch and generator) (when radio is installed) “135” and 150”	1	18-3014 to 18-7409066 inclusive
	16324-02		HARNESS ASSEMBLY - Wire (voltage regulator starter switch and generator) “150”	1	18-7409066 to 18-7409139 inch
	16604-02		HARNESS ASSEMBLY - Wire (voltage regulator starter switch and alternator) “150”	1	18-7409140 and up
	16060-00		HARNESS ASSEMBLY - Wire (voltage regulator tarter switch and generator) (when radio is installed “95”	1	18-3014 and up
-26	10443-00		INSULATOR - Fibre under fuse block	1	(PA-18 only) 18-1 to 18-664
-26	487 149	G	SOLENOID - Starter	1	
-27	80032-26		CLAMP -Wire attachment at battery	1	(PA-18 only) 18-1 to 18-664
-28	12177-26	F	WIRE ASSEMBLY - Tail light connector to disconnect	1	
-29	12177-28		WIRE ASSEMBLY - Tail light disconnect to rudder	1	
-30	14610-00		HARNESS ASSEMBLY - Navigation light in top deck	1	18-3771, 18-3781 and up

A - Used on PA-18 airplanes with Trial numbers 18-2860 18-2867 and up
B - Used on PA-18 airplanes with serial numbers 18-666 to 18-1214 inclusive
C - Used on PA-18 airplanes with serial numbers 18-1216 to 18-2849 inclusive 18-2861 to 18-2866 inclusive
D - Used on airplanes where wire assemblies have knife disconnects only
E - Used on airplanes where wire assemblies have end terminals only
F - Used on airplanes with serial numbers 18-1 to 18-3770 inclusive 18-3772 to 18-3780 inclusive.
G - See 88371 Electrical Contactor Replacement Kit.

When ordering, always specify Part Number, Description, and Serial Number of Aircraft

PIPER PARTS CATALOG

Figure and Index Number	Part Number	Code	NOMENCLATURE	No. Req.	SERIAL NUMBERS AFFECTED
36-31	15067-00	B	PANEL ASSEMBLY - Switch (with 20 amp generator)	1	18-1 to 18-7409055 inclusive
	15323-02		PANEL ASSEMBLY - Switch (with 50 amp generator)	1	18-7409056 to 18-7409139 incl.
-32	450 652		*AMMETER	1	18-1 to 18-7409055 inclusive
	15325-02		*AMMETER	1	18-7409056 to 18-7409139 incl.
-33	454 656		*CIRCUIT BREAKER - (PS50120-3-7) 5 amp	2	18-1 to 18-7409139 inclusive
	454 658	A	*CIRCUIT BREAKER - (PS50120-3-14) 15 amp	1	18-1 to 18-7409139 inclusive
	454 660		*CIRCUIT BREAKER - (PS50120-3-17) 25 amp	1	18-1 to 18-7409055 inclusive
	454 662		*CIRCUIT BREAKER - (PS50120-3-26) 50 amp	1	18-7409056 to 18-7409139 incl.
-34	15066-00		*PANEL- Switch	1	18-1 to 18-7409139 inclusive
-35	487 778		*SWITCH - Light (AN3022-2)	1	18-1 to 18-7409139 inclusive
-36	487 776		*SWITCH - Master (AN3023-1)	1	18-1 to 18-7409139 inclusive
-37	18576-06		STRIP - Insulator, inside right front windshield channel	1	18-3014 and up
-38	12273-00		CHANNEL ASSEMBLY - Box	2	PA-18 only) 18-1 to 18-664
-39	82161-02		WASHER - Countersunk	1	18-1215 and up
	82161-02		WASHER - Countersunk	4	PA-18 only) 18-1 to 18-664
-40	80122-10		WASHER	8	PA-18 only) 18-664 and up
-41	10128-27		WIRE ASSEMBLY - Navigation light, RH	1	
-42	10128-28		WIRE ASSEMBLY - Navigation light, LH	1	
-43	12177-17		WIRE ASSEMBLY - Solenoid to fuse block	1	18-1 to 18-7409139 inclusive
-44	15491-02	D	PLATE - Solenoid mounting	1	18-7409140 and up
-45	484 373	C,E	RELAY - Power (24059)	1	18-7409140 to 18-7809053 incl.
	455 151		RELAY - Power (6041 H 105A)	1	18-7809054 and up
-46	487 790		SWITCH - (110-S-73)	2	18-7409140 and up
-47	454 659		CIRCUIT BREAKER - (PS50120-3-16)	1	18-7409140 and up
-48	60728-02		PANEL - Switch	1	18-7409140 and up
-49	66696-00		AMMETER	1	18-7409140 and up
-50	454 656		CIRCUIT BREAKER - (PS50120-3-7) 5 amp	3	18-7409140 and up
-51	454 711		CIRCUIT BREAKER - (PS50120-1-13) 60 amp	1	18-7409140 and up
-52	60766-02		CABLE ASSEMBLY	1	18-7409140 and up
-53	487 907		SWITCH - (2GK54-73)	1	18-7409140 and up
-54	31506-06		BUS BAR	1	18-7409140 and up
-55	454 657		CIRCUIT BREAKER - (PS50120-3-12) 10 amp	AR	18-7409140 and up
-56	23969-03		NIPPLE - (MS25171-2-S)	3	
-57	23969-02		NIPPLE - (MS25171-1-S)	2	
-58	454 677		CIRCUIT BREAKER - (PS50120-3-10) 7.5 amp	1	18-7709134 and up
-59	484 373	D,E	RELAY - Landing light	1	

A - This part not included with switch panel assembly. If required, must be ordered separately.
B - See Figure 40B if 35 amp generator is installed.
C - Order part for serial numbers 18-7809054 and up if Power Relay Replacement Kit 763 826 has been installed per Service Letter 828.
D - Used on aircraft with alternator powered electrical system only.
E - See 88371 Electrical Contactor Replacement Kit.

When ordering, always specify Part Number, Description, and Serial Number of Aircraft

1 G21

INTENTIONALLY LEFT BLANK

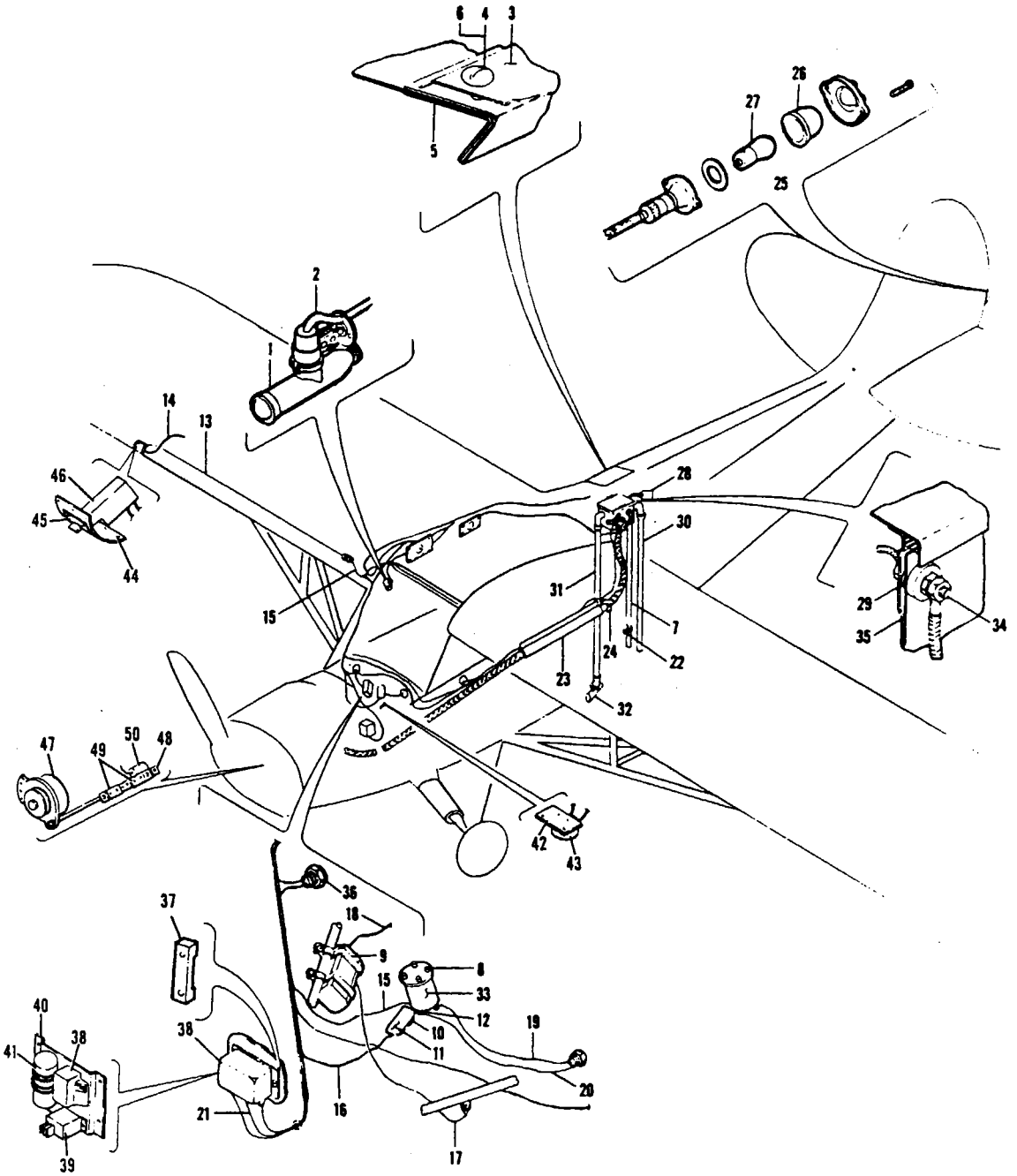

Figure 37. Electrical Components Installation

Figure and Index Number	Part Number	Code	NOMENCLATURE	No. Req.	SERIAL NUMBERS AFFECTED
37-	14074	A	DRAWING - Battery Box Installation		
	12302		DRAWING - Electrical System Installation		18-1 to 18-3013 inclusive
	14241		DRAWING - Electrical System Installation		18-3014 to 18-7409139 incl.
	15500		DRAWING - Electrical System Installation		18-7409140 and up
-1	472 660		LIGHT ASSEMBLY - Cockpit	1	
-2	90797-13		SLEEVE - Insulator	1	
-3	13180-00		DOOR ASSEMBLY - Battery access	1	(PA-18 only) 18-665 and up
	12913-00		DOOR ASSEMBLY - Battery access (also used when Whitaker Duster and Sprayer is installed)	1	(PA-18A only) 18-1215 and up
-4	487 563		STUD - Fastener (No. 5-0-140A)	4	18-665 and up
	463 368		GROMMET - (No. GOS-5-93)	4	18-665 and up
-5	13179-00		FRAME ASSEMBLY - Battery door	1	(PA-18 only) 18-665 and up
	12910-00		FRAME ASSEMBLY - Battery door (also used when Whitaker Duster and Sprayer is installed)	1	(PA-18A only) 18-1215 and up
-6	487 288		SPRING - Fastener (No. 5-295)	4	18-665 and up
-7	13586-02	B	TUBE - Battery drain	1	
	22369-04	A	TUBE - Battery drain	1	
-8	80012-04		BUSHING - Spacer	4	18-1 to 18-7409139 inclusive
-9	12858-00	C	CLAMP - Battery attachment	2	18-1 to 18-7409139 inclusive
-10	461 623	D	FUSE - (3AG5)	1	18-1 to 18-7409139 inclusive
-11	12156-00	D	BLOCK - Fuse	1	18-1 to 18-7409139 inclusive
-12	80122-05	D	WASHER - Fuse block attachment	2	18-1 to 18-7409139 inclusive
-13	12177-68		WIRE ASSEMBLY - Wing unit	1	
-14	12177-69		WIRE ASSEMBLY - Ground	1	
-15	12177-67		WIRE ASSEMBLY - Disconnect to panel unit	1	18-1 to 18-7409139 inclusive
-16	12177-66	D	WIRE ASSEMBLY - Ammeter to fuse block	1	18-1 to 18-7409139 inclusive
-17	12177-74	C	WIRE ASSEMBLY - Ground	1	18-1 to 18-7409139 inclusive
-18	12177-73	C	WIRE ASSEMBLY - Panel unit to battery	1	18-1 to 18-7409139 inclusive
-19	12177-61	E	WIRE ASSEMBLY - Indicator light to panel unit	1	18-1 to 18-7409139 inclusive
-20	10128-83	E	WIRE ASSEMBLY - Indicator light to panel unit	1	18-1 to 18-7409139 inclusive
-21	12177-22		WIRE ASSEMBLY - Voltage regulator to generator, "105", "125", "135" and "150"	1	
	14230-05		WIRE ASSEMBLY - Voltage regulator to generator, "95"	1	
-22	454 925	A	CLAMP - Battery drain tube (No. 18-882)	1	
-23	12021-00		COVER - Starter cable	1	(PA-18 only) 18-665 to 18-3013
-24	434 142	F	GROMMET - Rubber (AN931-14-20)	1	

A - Used on PA-18 airplanes with serial numbers 18-2850, 18-2857 and up.
B - Used on PA-18 airplanes with serial numbers 18-1215 to 18-2849 inclusive, 18-2851 to 18-2856 inclusive.
C - Used when electrical equipment is not installed.
D - Used when electrical equipment is installed.
E - Used on PA-18 airplanes with serial numbers 18-2850 and 18-2857 to 18-3013 inclusive.
F - Used on PA-18 airplanes with serial numbers 18-665 to 18-3013 inclusive.

PIPER PARTS CATALOG

Figure and Index Number	Part Number	Code	NOMENCLATURE	No. Req.	SERIAL NUMBERS AFFECTED
37-25	472 736		LIGHT - Navigation, tail (A2064-1073)	1	
-26	751 203		* LENS - White (No. A2103-1)	1	
-27	753 341		* BULB - (10-73)	1	
-28	14072-00	B	TAG - Battery service instructions	1	
-29	81342-56	B	WASHER - Terminal bolt attachment	2	
-30	22369-23	B	TUBE - Battery vent, outlet	1	
-31	22369-23	B	TUBE - Battery vent, inlet	1	
-32	14066-00	B	TUBE ASSEMBLY - Battery air intake	1	
-33	450 675	C	KIT - Safe flight indicator	1	18-1 to 18-7409139 inclusive
	751 220		KIT - Safe flight indicator (with dry cell battery)	1	18-1 to 18-7409139 inclusive
-34	14069-00	A	BOLT ASSEMBLY - Terminal	2	
	14225-00		BOLT ASSEMBLY - Terminal	2	(PA-18 only) 18-3014 and up
-35	14070-00	B	STRIP - Insulation, positive terminal	1	
-36	487 527		SWITCH - Starter (1875-0) R.B.M. Co.	1	
-37	470 648		MOUNT ASSEMBLY - Voltage regulator shock	1	18-5939 and up
-38	450 383		VOLTAGE REGULATOR - (20 amp generator)	1	18-1 to 18-7409055 inclusive
	450 384		VOLTAGE REGULATOR - (50 amp generator)	1	18-7409056 to 18-7409139 incl.
	756 547		VOLTAGE REGULATOR - (60 amp alternator)	1	18-7409140 to 18-8109043 incl.
	756 586		VOLTAGE REGULATOR - (60 amp alternator)	1	18-8109044 and up
-39	484 183	D	RELAY - Overvoltage (B-00289-2)	1	18-7409140 to 18-7709198 incl.
	60727-02		RELAY ASSEMBLY - Overvoltage	1	18-7809001 to 18-7809153 incl., 18-7909021 to 18-7909140 incl.
	60727-03		RELAY ASSEMBLY - Overvoltage	1	18-7809154 to 18-7909020 incl., 18-7909141 and up
-40	15489-02	D	BRACKET ASSEMBLY - Voltage regulator mounting	1	18-7409140 to 18-7709198 incl.
	15489-04		BRACKET ASSEMBLY - Voltage regulator mounting	1	18-7809001 to 18-7809153 incl. 18-7909021 to 18-7909149 incl.
	60754-02		BRACKET ASSEMBLY - Voltage regulator mounting	1	18-7809154 to 18-7909020 incl. 18-7909141 to 18-8109043 incl.
	60754-04		BRACKET ASSEMBLY - Voltage regulator mounting	1	18-8109044 and up
-41	762 256		SPIKE GAURD - Voltage (A-178)	1	18-7409140 and up
-42	44235-00		PLATE - Stall warning horn mounting	1	18-7409140 and up
-43	565 288		HORN - Stall warning (02054-3)	1	18-7409140 and up
-44	16860-00		PLATE ASSEMBLY - Lift detector reinforcement	1	18-7409140 and up
-45	19807-00		PLATE - Lift detector mounting	1	18-7409140 and up
-46	450 742		LIFT DETECTOR - (C-52207-4)	1	18-7409140 and up
-47	751 349		ALTERNATOR - (A-152A)	1	18-7409140 and up
-48	761 620		MOUNTING BAR - (A-167-9)	1	18-7409140 and up
-49	761 618		MOUNTING BRACKET - (A-167-10)	2	18-7409140 and up
-50	758 080		CAPACITOR - (A-177)	1	18-7409140 and up

A - Used on PA-18 airplanes with serial numbers 18-2850, 18-2857 to 18-3013 inclusive.
B - Used on PA-18 airplanes with serial numbers 18-2850, 18-2857 and up.
C - Used when electrical equipment is installed.
D - Order part for serial numbers 18-7809001 to 18-7809153 inclusive, and 18-7909021 to 18-7909141 inclusive if Overvoltage Relay Replacement Kit 763 827 has been installed per Service Letter No. 828.

When ordering, always specify Part Number, Description and Serial Number of Aircraft

PIPER PARTS CATALOG

Figure and Index Number	Part Number	Code	NOMENCLATURE	No. Req.	SERIAL NUMBERS AFFECTED
38-	13296	A,D	DRAWING - Battery Box Installation		
	14229		DRAWING - Battery Box Installation		(PA-18A only) 18-3014 and up
-1	11134-07		CABLE ASSEMBLY - Solenoid to starter	1	18-665 to 18-3013 inclusive
	14226-03		CABLE ASSEMBLY - Solenoid to starter	1	(PA-18A only) 18-3014 and up
-2	12177-88		WIRE ASSEMBLY -125" and "135", solenoid to starter switch	1	18-665 to 18-3013 inclusive
-3	12177-17		WIRE ASSEMBLY - Solenoid to fuse box	1	
-4	12298-00	B	HARNESS ASSEMBLY - Wire	1	
	14223-03		HARNESS ASSEMBLY - Wire, battery to master switch panel assembly	1	(PA-18A only) 18-3014 and up
-5	11134-08	A	CABLE ASSEMBLY - Battery to solenoid	1	
	14224-03		CABLE ASSEMBLY - Battery to solenoid	1	(PA-18A only) 18-3014 and up
-5a	189 080		*DUCT - Type SP 1 /2"	14"	(PA-18A only) 18-3014 and up
-6	11122-02	A	CABLE ASSEMBLY - Battery ground	1	
	17604-06		CABLE ASSEMBLY - Battery ground	1	(PA-18A only) 18-3014 and up
-7	487 149	C	SOLENOID - Starter, "105", "125", "135" and "150"	1	
-8	461 624		FUSE - (No. 3AG30 AMP)	3	
-9	10438-02		JUMPER	1	
-10	13051-00		BLOCK ASSEMBLY - Fuse	1	18-1215 and up
-11	10443-00		PLATE - Mounting, fuse block	1	(PA-18A only) 18-1215 and up
-12	13292-00		PANEL ASSEMBLY - Mounting, fuse block	1	(PA-18A only) 18-1215 and up
-13	13588-00		COVER ASSEMBLY - Battery box	1	(PA-18A only) 18-1215 and up
-14	450 035		BATTERY - Reading, No. R-33-12V	1	18-1215 and up
-15	13589-00		BOX ASSEMBLY - Battery	1	(PA-18A only) 18-1215 and up
-16	13295-00		ANGLE - Battery box mounting	2	(PA-18A only) 18-1215 and up

A - Used on PA-18A airplanes with serial numbers 18-1215 to 18-3013 inclusive.
B - Used on PA-18 airplanes with serial numbers 18-1 to 18-664 inclusive, and PA-18A airplanes with serial numbers 18-1262 to 18-3013 inclusive.
C - See 88371 Contactor Replacement Kit.
D - See latest revision of Piper Service Letter 195 for PA-18A models only with serial numbers 18-1262 to 18-1885 inclusive, 18-1888, and 18-1889.

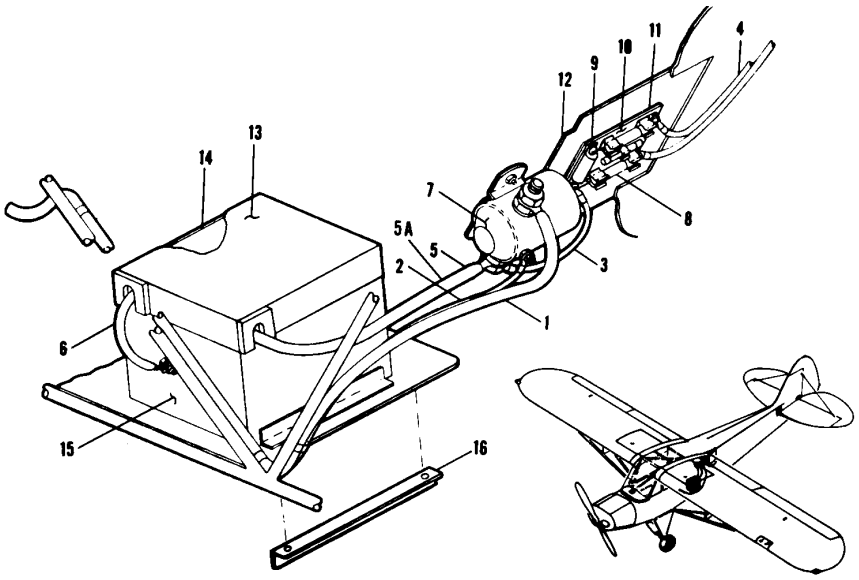

Figure 38. Battery Box Installation

1 H2

INTENTIONALLY LEFT BLANK

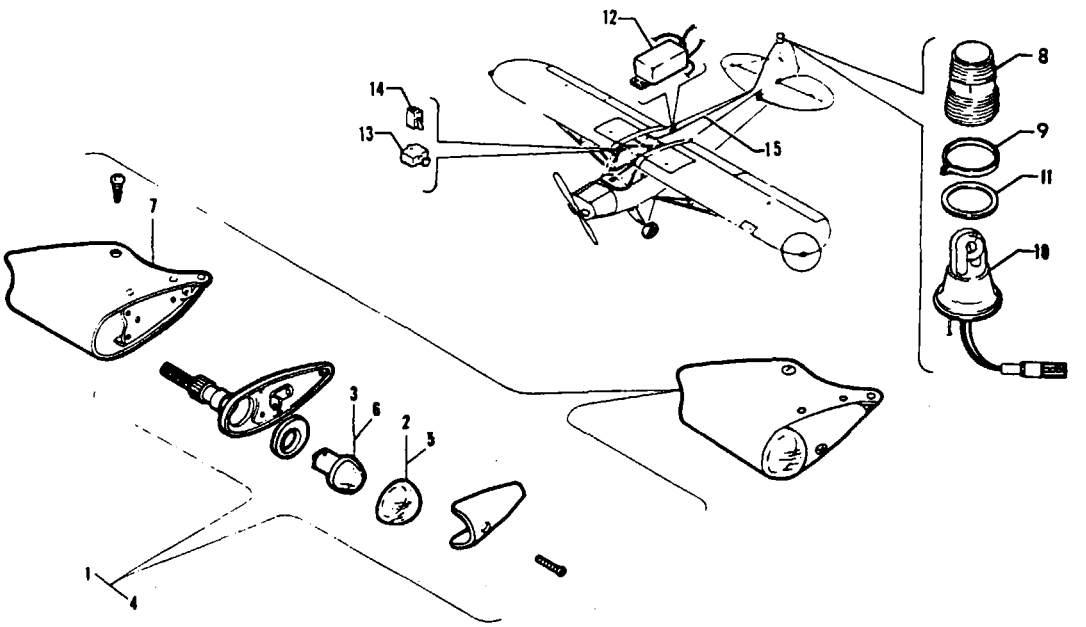

Figure 39. Wing Light and Strobe Light Installation

PIPER PARTS CATALOG

Figure and Index Number	Part Number	Code	NOMENCLATURE	No. Req.	SERIAL NUMBERS AFFECTED
39-1	472 665		LIGHT - Navigation, wing, red, LH (Grimes No. A1285)	1	
-2	751 202		*LENS - Red (No. A1280-2)	1	
-3	751 381		*BULB - (No.1512)	1	
-4	472 666		LIGHT - Navigation, wing, green, RH (Grimes No. A1285)	1	
-5	751 201		*LENS - Green (No. A1280-3)	1	
-6	751 381		*BULB- No. 1512	1	
-7	12560-00		BRACKET ASSEMBLY - Navigation light, wing	2	
-8	44291-02		LENS - Strobe light	1	18-7509123 and up
-9	755 200		CLAMP - Ring assembly (A409)	1	18-7509123 and up
-10	761 189		FLASH TUBE - (A469D)	1	18-7509123 and up
-11	755 042		GASKET - (A467)	1	18-7509123 and up
-12	757 359		POWER SUPPLY - (A412A-14) Single flash	1	18-7509123 and up
	472 963		POWER SUPPLY - (A412A-14DF) Double flash	1	18-7509123 and up
-13	454 656		CIRCUIT BREAKER (PS50120-3-7)	1	18-7509123 and up
-14	580 903		SWITCH - (MS35058-22)	1	18-7509123 and up
-15	15857-02		CABLE ASSEMBLY - Tail strobe light	1	

When ordering, always specify Part Number, Description, and Serial Number of Aircraft

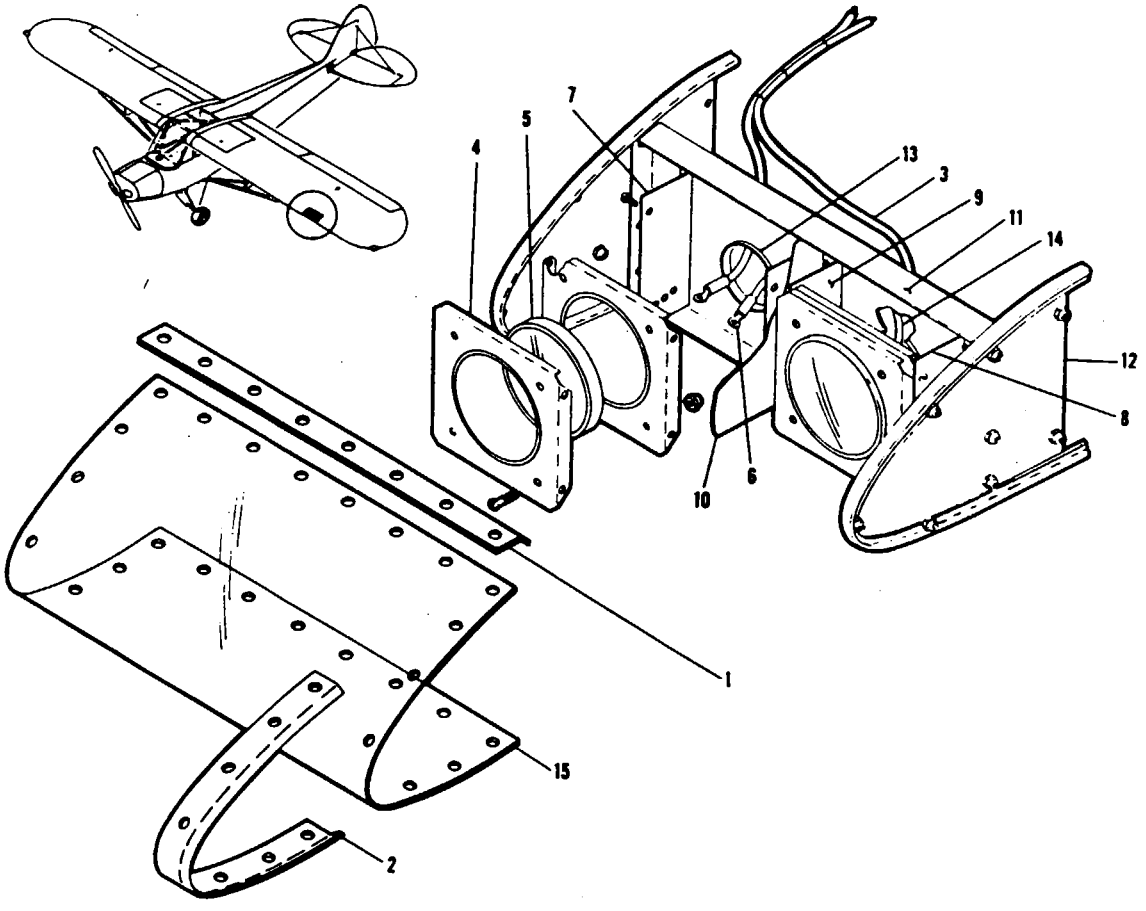

Figure 40. Landing Light Installation

PIPER PARTS CATALOG

Figure and Index Number	Part Number	Code	NOMENCLATURE	No. Req.	SERIAL NUMBERS AFFECTED
40-	12534	C	DRAWING - Landing Light Installation, “95”, “105”, “125” and “135”		
	14442		DRAWING - Landing Light Installation, “150”		18-3771, 18-3781 and up
	14502		DRAWING - Landing Light Assembly, “135” and “150”		18-3771, 18-3781 and up
-1	12533-02	C	STRIP - Attachment. “95,” “105,” “125” and “135”	1	
	12533-05		STRIP - Landing light window attachment, top and bottom, “135” and “150”	2	18-3771, 18-3781 to 18-5058
	14787-03		STRIP - Landing light window attachment, top and bottom, “150”	2	18-5059 and up
-2	12533-03		STRIP - Side attachment	2	18-1 to 18-5058 inclusive
	14786-00		STRIP - Side attachment, left	1	18-5059 and up
	14786-01		STRIP - Side attachment, right	1	18-5059 and up
-3	12298-12	A	HARNESS ASSEMBLY - Wire	1	18-1 to 18-7409139 inclusive
	12298-07	B	HARNESS ASSEMBLY - Wire	1	18-1 to 18-7409139 inclusive
	49977-86		HARNESS ASSEMBLY - Wire	1	18-7409140 and up
-4	12525-00		PLATE	4	
-5	472 661		LIGHT - Landing, 100W -12V (No. 4509)	2	
-6	12177-33		WIRE ASSEMBLY - Light, ground, outboard	1	
-7	12524-03		BRACKET	1	
-8	12524-04		BRACKET	1	
-9	12524-02		BRACKET	1	
-10	12529-03		PLATE - Reinforcement	1	
-11	12527-00	C	PLATE - Mounting, “95”, “105”, “125” and “135”	1	
	12527-04		PLATE - Landing light mounting, “135” and “150”	1	18-3771, 18-3781 and up
-12	12529-02		PLATE - Reinforcement	2	
-13	189 625		GROMMET - (MS21266-1N)(12.75” Long)	AR	
-14	10128-93		WIRE ASSEMBLY - Light, ground, inboard	1	
-15	12532-00	C	WINDOW - Landing light	1	
	12532-03		WINDOW - Landing light	1	18-3771, 18-3781 to 18-5058
	14785-03		WINDOW - Landing light	1	18-5059 and up

A - Used on airplanes where wire assemblies have knife disconnects only.

B - Used on airplanes where wire assemblies have end terminals only.

C - Used on PA-18 “95” airplanes with serial numbers 18-1 and up. Used on PA-18 and PA-18A “105” and “125” airplanes with serial numbers 18-1 to 18-3770, 18-3772 to 18-3780 inclusive, and PA-18 “135” air planes with serial numbers 18-1 and up.

When ordering, always specify Part Number, Description, and Serial Number of Aircraft

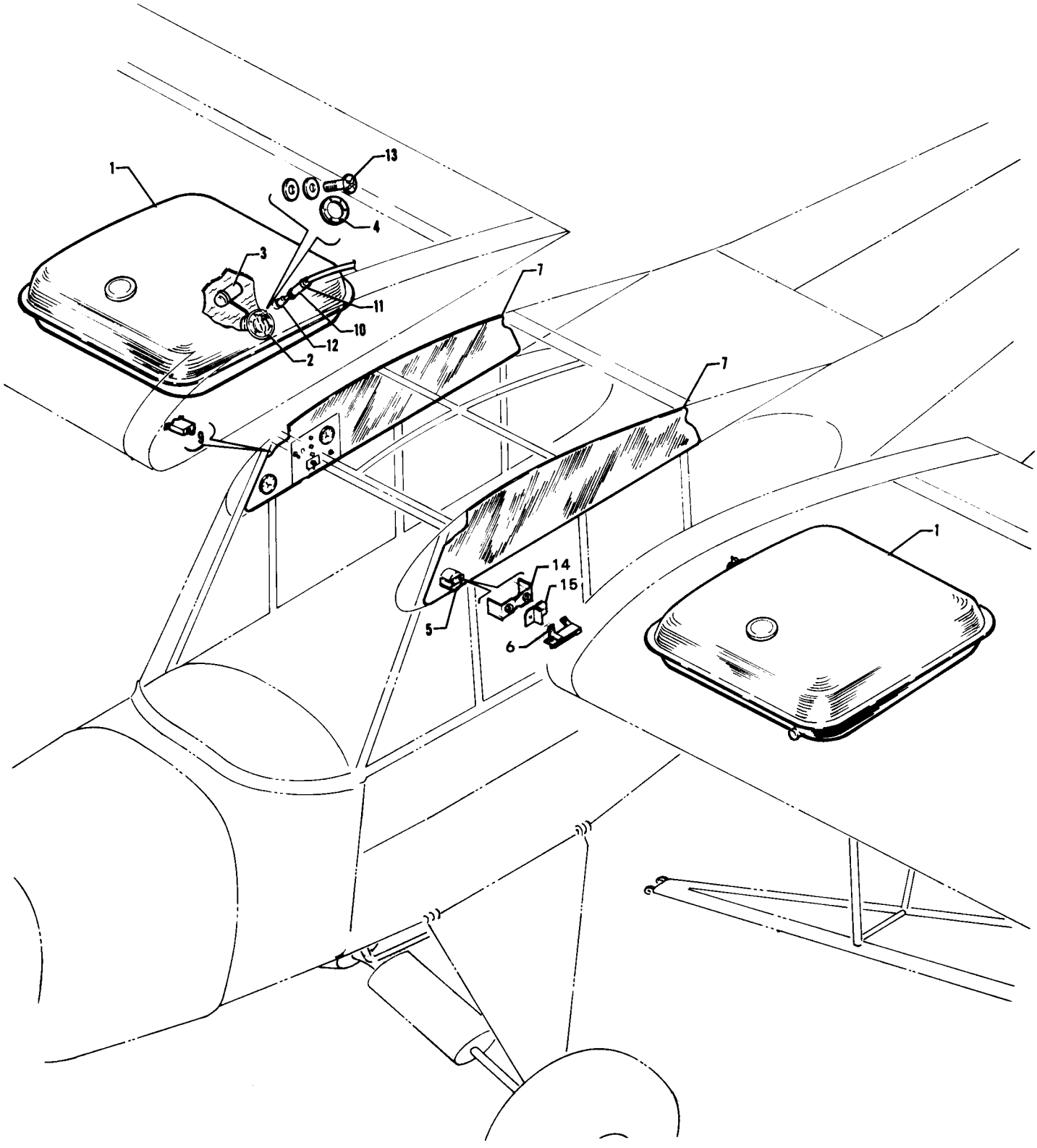

Figure 40A. Electric Fuel Gauge Installation

PIPER PARTS CATALOG

Figure and Index Number	Part Number	Code	NOMENCLATURE	No. Req.	SERIAL NUMBERS AFFECTED
40A-	15277		DRAWING - Electric Fuel Gauge Installation “150”		
-1	10849-34		TANK ASSEMBLY - Fuel, left	1	
	10849-43		TANK ASSEMBLY - Fuel, right	1	
-2	13009-02		GAUGE ASSEMBLY - Fuel, tank unit (550 649)	2	18-3771,18-3781 to 18-8109016 incl.
	60762-02		GAUGE ASSEMBLY - Fuel, tank unit (548 532)	2	18-8109017 and up
-3	751 767	B	FLOAT ASSEMBLY - Fuel gauge	1	
-4	462 021	B	GASKET - Fuel tank unit (1516395)	2	18-3771,18-3781 to 18-8109016 incl.
	755 049	C,V	GASKET - Fuel tank unit (15-423)	2	18-8109017 and up
-5	15166-02		GAUGE ASSEMBLY - Fuel, panel unit	2	
-6	451 850	A	ADAPTER - Fuel gauge (1517287)	2	
-7	15271-02		PANEL - Cockpit, upper left trim	1	
	14337-04		PANEL - Cockpit, upper right trim	1	
-8			DELETED		
-9	454 656		CIRCUIT BREAKER - (PS50120-3-7)	1	
-10	82371-06		HOSE - Vent line	1	
-11	454 983		CLAMP - Hose (8)	2	
-12	458 940		ELBOW - Fuel tank vent (AN844-4D)	1	
-13	48659-08		SCREW ASSEMBLY - Seal	10	18-3771,18-3781 to 18-8109016 incl.
	48659-11		SCREW ASSEMBLY - Seal	10	18-8109017 and up
-14	487 726		STRAP - Mounting (A.C. 6460429)	2	
-15	487 350		SEPARATOR - Terminal (A.C.1515642)	2	

A - Used on fuel gauge stamped with A.C. Spark Plug No. 5644510 or No. 5644005 only.
B - Used with Fuel Gauge Assembly Part Number 13009-02 (550 649) only.
C - Used with Fuel Gauge Assembly Part Number 60762-02 (548 532) only.
V - These parts must be ordered from Service Spares Department, Piper Aircraft Corporation, Vero Beach, Honda

When ordering, always specify Part Number, Description, and Serial Number of Aircraft

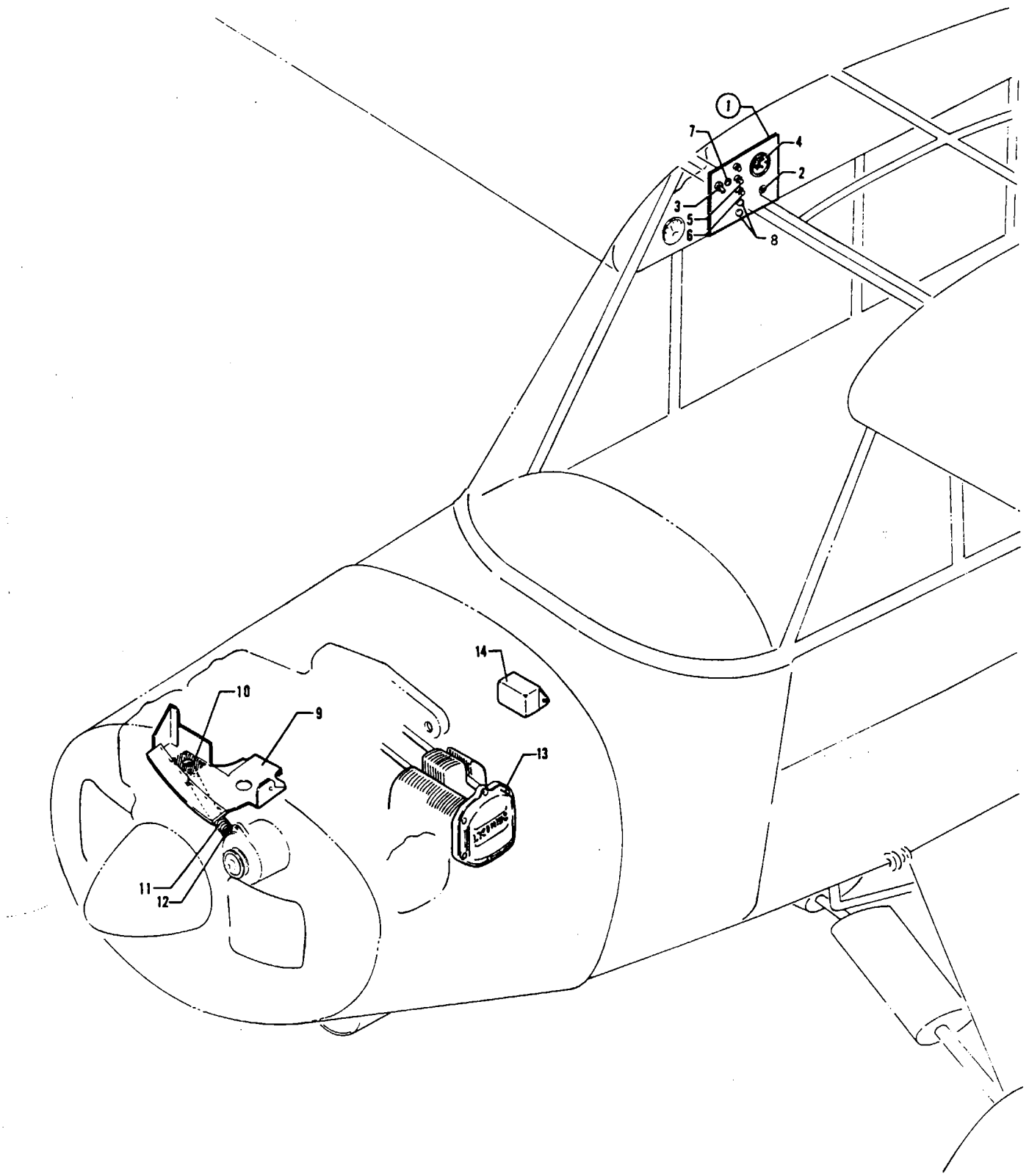

Figure 408. 35 AMP Generator Installation

PIPER PARTS CATALOG

Figure and Index Number	Part Number	Code	NOMENCLATURE	No. Req.	SERIAL NUMBERS AFFECTED
408-	15288		DRAWING - 35 AMP Generator Installation "150"		
-1	15273-00		PANEL ASSEMBLY - Switch	1	
-2	487 776		* SWITCH - Master (AN3023-1B)	1	
-3	487 778		* SWITCH - Navigation lights (AN3022-2)	1	
-4	763 027		* INSTRUMENT - Ammeter	1	
-5	454 663		* CIRCUIT BREAKER - (PS50120-3-19)	1	
-6	454 656		* CIRCUIT BREAKER - (PS50120-3-7)	2	
-7	453 602		* BUTTON - Plug (SS48152)	1	
-8	453 668		* BUTTON - Plug (HS51077)	2	
-9	14439-07		BAFFLE ASSEMBLY - Engine, right front	1	
-10	11280-00		TAKE-OFF ASSEMBLY - Engine baffle	1	
-11	10525-51		HOSE - Flexible	1	
-12	554 892		CLAMP - (SAE TY A-15/16)	2	
-13			ENGINE - Lycoming (O-320-A2B)	1	
-14	450 390		VOLTAGE REGULATOR - (35 amp)	1	

When ordering, always specify Part Number, Description and Serial Number of Aircraft

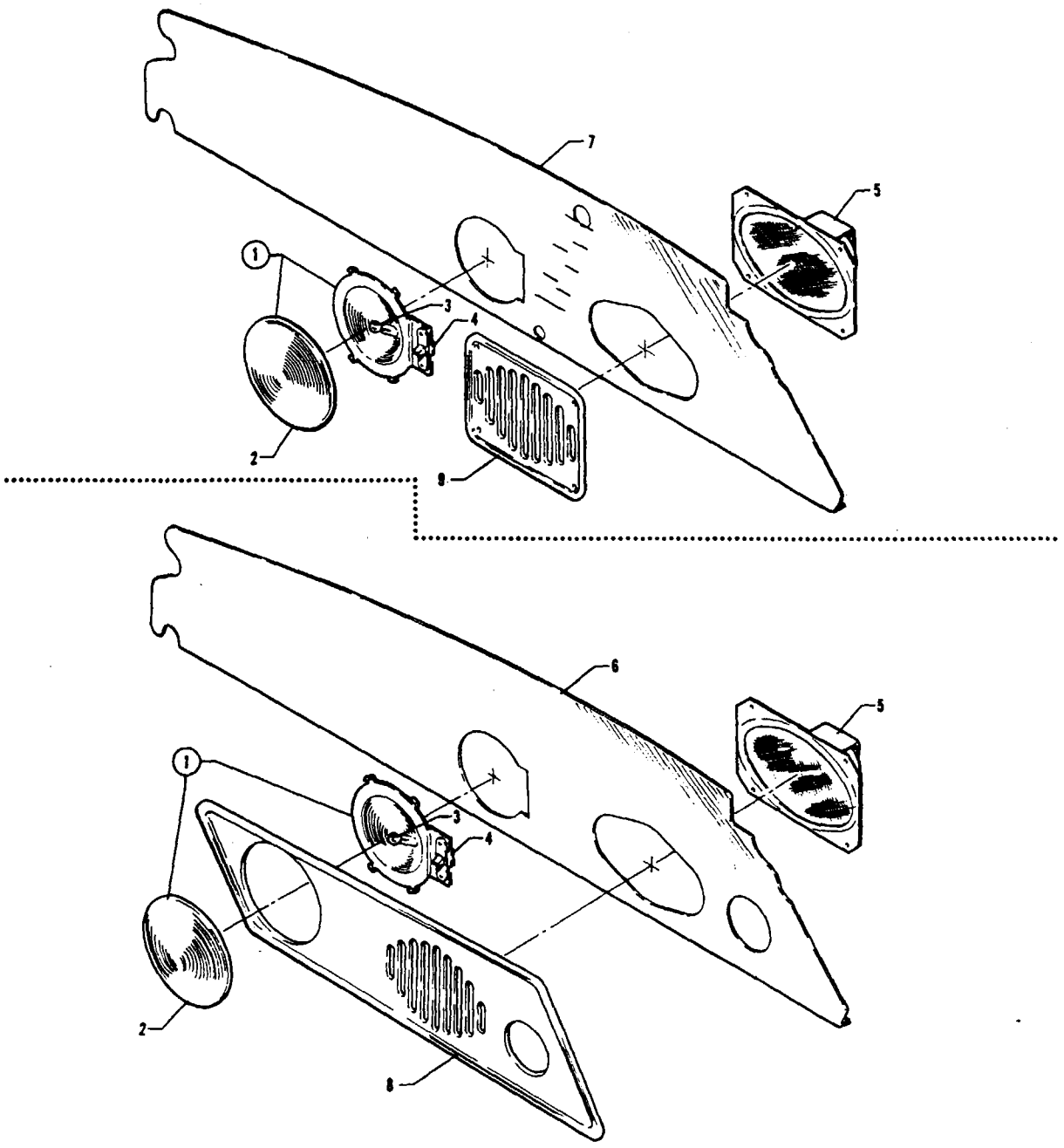

Figure 40C. Speaker and Dome Light Installation

PIPER PARTS CATALOG

Figure and Index Number	Part Number	Code	NOMENCLATURE	No. Req.	SERIAL NUMBERS AFFECTED
40C-	15285		DRAWING - Speaker and Dome Light Installation "150"		
-1	15281-00		LIGHT ASSEMBLY - Dome	1	
-2	472 330		* LENS - Dome light (12715-00)	1	
-3	472 036		* BULB - Dome light (89)	1	
-4	487 777		* SWITCH - Dome light (5518)	1	
-5	21879-02		SPEAKER ASSEMBLY	1	18-3771, 18-3781 to 18-8109024 inclusive
-6	15271-00	A	PANEL - Cockpit, upper left trim	1	18-3771, 18-3781 to 18-8109024 inclusive
	15271-06	A	PANEL - Cockpit, upper left trim (without speaker hole)	1	18-8109025 and up
-7	15271-03	B	PANEL - Cockpit, upper left trim	1	18-3771, 18-3781 to 18-8109024 inclusive
	15271-07	B	PANEL - Cockpit, upper left trim (without speaker hole)	1	18-8109025 and up
-8	15318-00		PANEL - Speaker	1	18-3771, 18-3781 to 18-8109024 inclusive
-9	15317-00		PANEL - Speaker	1	18-3771, 18-3781 to 18-8109024 inclusive
			A - Used when electric fuel gauge is installed.		
			B - Used when standard fuel gauge is installed.		

When ordering, always specify Part Number, Description and Serial Number of Aircraft

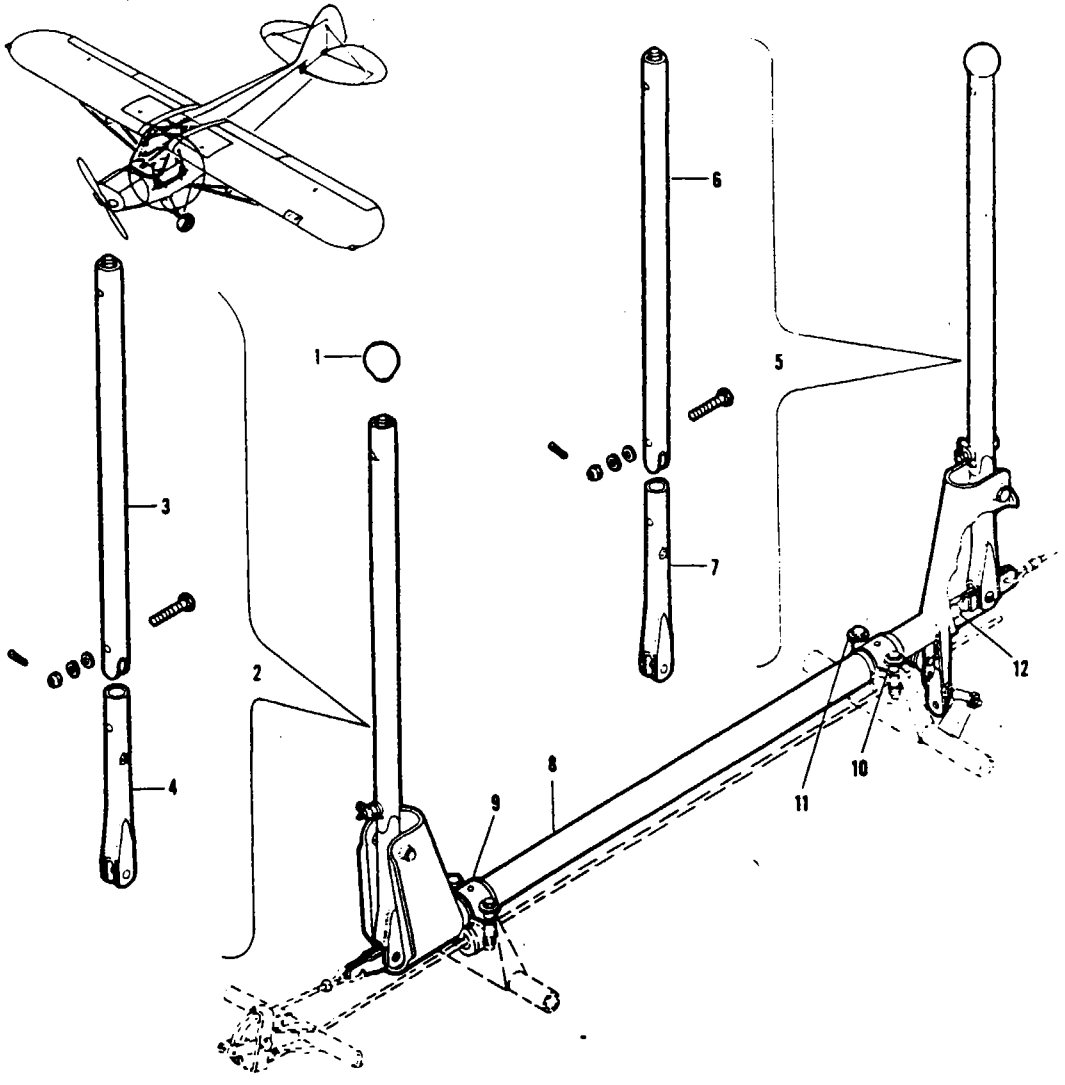

Figure 41. Elevator and Aileron Control Installation

PIPER PARTS CATALOG

Figure and Index Number	Part Number	Code	NOMENCLATURE	No. Req.	SERIAL NUMBERS AFFECTED
41-	12237	B	DRAWING - Control Installaion, Elevator and Aileron (dual control) "95", "105" and "125"		
	13739	C	DRAWING - Control Installation, Elevator and Aileron (dual control) "95", "135" and "150"		
	13276		DRAWING - Control Installation, Elevator and Aileron (single control) "125"		(PA-18A only)
	13740		DRAWING - Control Installation, Elevator and Aileron (single control) "135" and "150"		(PA-18A only)
-1	18875-07		KNOB	2	
-2	42812-00	A,B	STICK ASSEMBLY - Front, "105" and "125"	1	
	13733-02	C	STICK ASSEMBLY - Front, "135" and "150"	1	18-1215 to 18-7709038 inclusive
	13733-04		STICK ASSEMBLY - Front, "150"	1	18-7709039 and up
-3	12403-02	A,B	* STICK - Top, "105" and "125"	1	
	13731-02	C	* STICK - Top, "135" and "150"	1	18-1215 to 18-7709038 inclusive
	13731-04		* STICK - Top, "150"	1	18-7709039 and up
-4	42792-00	A,B	* STUB ASSEMBLY - "105" and "125"	1	
	13729-00	C	* STUB ASSEMBLY - "135" and "150"	1	
-5	42812-02	A,B	STICK ASSEMBLY - Rear, "105" and "125"	1	
	13733-04	C	STICK ASSEMBLY - Rear, "135" and "150"	1	
-6	12403-03	A,B	* STICK - Top, "105" and "125"	1	
	13731-04	C	* STICK - Top, "135" and "150"	1	
-7	42792-00	A,B	* STUB ASSEMBLY - "95", "105" and "125"	1	
	13729-00	C	* STUB ASSEMBLY - "95", "135" and "150"	1	
-8	40223-04	A,B	TORQUE TUBE ASSEMBLY - Dual control, "105", "125" and "95"	1	
	13735-00	C	TORQUE TUBE ASSEMBLY - Dual control, "95", "135" and "150"	1	
	13280-00		TORQUE TUBE ASSEMBLY - Single control, "125"	1	(PA-18A only)
	13742-00		TORQUE TUBE ASSEMBLY - Single control, "135" and "150"	1	(PA-18A only)
-9	21811-03		CAP - Bearing	2	
-10	41371-02		SHIMS - Torque tube bearing attachment	AR	
	41371-03		SHIMS - Torque tube bearing attachment	AR	
	41371-04		SHIMS - Torque tube bearing attachment	AR	
-11	80122-17		WASHER - Torque tube bearing attachment	4	
-12	40261-00		TUBE ASSEMBLY - Control stick connector (with dual control)	1	

A - Used on PA-18 airplanes with serial numbers 18-1 to 18-1969 inclusive and PA-18A airplanes with serial numbers 18-1215 to 18-1969 inclusive.
B - Used on "95" airplanes with serial numbers 18-1 to 18-2891 inclusive.
C - Used on "95" airplanes with serial numbers 18-2892 and up.

When ordering, always specify Part Number, Description and Serial Number of Aircraft

1H15

INTENTIONALLY LEFT BLANK

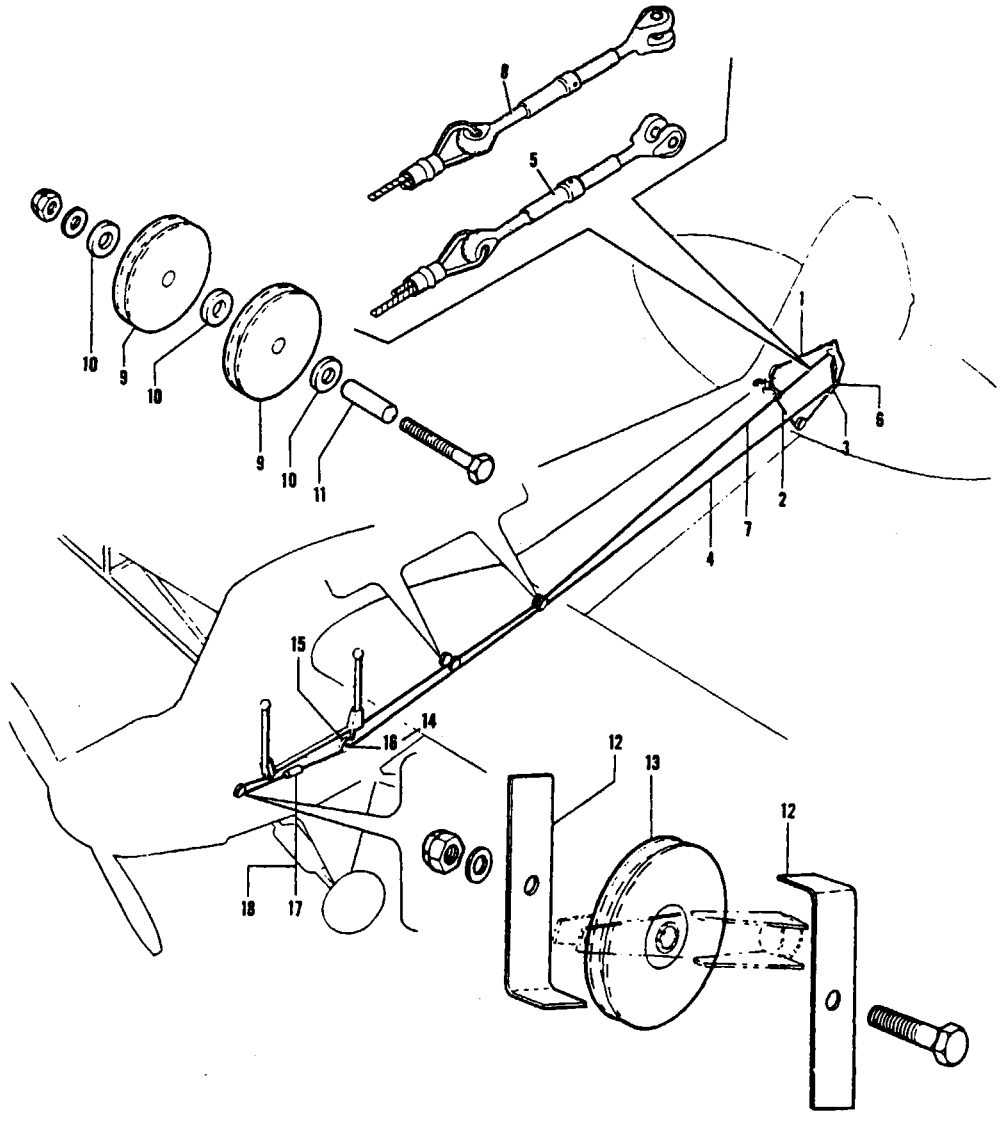

Figure 42. Elevator Control System

PIPER PARTS CATALOG

Figure and Index Number	Part Number	Code	NOMENCLATURE	No. Req.	SERIAL NUMBERS AFFECTED
42-1	40123-78		CABLE ASSEMBLY - Bungee, "105", "125", "135" and "150"	1	
	40123-66		CABLE ASSEMBLY - Bungee, "95"	1	
	40123-89	A,G	CABLE - Bungee, "125", "135" and "150"	1	
	40123-81	A,B	CABLE - Bungee, "105"	1	
-2	40123-92	A,B	CABLE - Bungee, front, "105"	1	
-3	40123-88	A,B	CABLE - Bungee, rear, "105"	1	
-4	10870-08	C,D	CABLE ASSEMBLY - Elevator, lower "95", "105" and "125"	1	
	13745-00	E	CABLE ASSEMBLY - Elevator, lower "95", "135" and "150"	1	
	13745-03	A,G	CABLE ASSEMBLY - Elevator, lower "135" and "150"	1	
	10870-17	A	CABLE ASSEMBLY - Elevator, lower "105" and "125"	1	
-5	42722-00		* TURNBUCKLE ASSEMBLY - Control cable	1	
	42722-02	A	* TURNBUCKLE ASSEMBLY - Control cable	1	
-6	41271-02		LINK - Cable attachment	1	
-7	10870-07	F	CABLE ASSEMBLY - Elevator, upper	1	
	13271-00		CABLE ASSEMBLY - Elevator, upper (single control) "125","135" and "150"	1	(PA-18A only)
	10870-16	A,F,G	CABLE ASSEMBLY - Elevator, upper "125", "135" and "150"	1	
-8	42722-00		* TURNBUCKLE ASSEMBLY - Control cable	1	
	42722-02	A	* TURNBUCKLE ASSEMBLY - Control cable	1	
-9	80421-00		PULLEY - Fibre 1-3/4"	4	
-10	81342-42		WASHER	6	
-11	86102-92		BUSHING	2	
-12	12241-00		BRACKET - Pulley guard	2	
-13	41001-00		PULLEY - 2-3/4"	1	
-14	80122-18		WASHER	2	
-15	11200-00		PULLEY	1	
-16	80012-04		BUSHING - Insert	1	
-17	40071-00		FAIRLEAD - Cable	2	
-18	40081-00		RING - Snap	1	

A - Used if stainless steel cables are installed.
B - Used on PA-18 airplanes with serial numbers 18-1 to 18-548 inclusive.
C - Used on PA-18 airplanes with serial numbers 18-1 to 18-3013 inclusive and PA-18A airplanes with serial numbers 18-1215 to 18-1969 inclusive.
D - Used on PA-18 "95" airplanes with serial numbers 18-1 to 18-2891 inclusive.
E - Used on PA-18 "95" airplanes with serial numbers 18-2892 and up.
F - Also used on PA-18A airplanes with dual control.
G - Also used on PA-18-150 seaplanes.

When ordering, always specify Part Number, Description and Serial Number of Aircraft

PIPER PARTS CATALOG

Figure and Index Number	Part Number	Code	NOMENCLATURE	No. Req.	SERIAL NUMBERS AFFECTED
43-1	40123-03		CABLE ASSEMBLY - Aileron control, balance	2	
	14300-19	A	CABLE ASSEMBLY - Aileron control, balance	2	
-2	42722-00		TURNBUCKLE ASSEMBLY - Control cable	1	
	42722-02	A	TURNBUCKLE ASSEMBLY - Control cable	1	
-3	81262-36		LINK	2	
-4	40123-76	B	CABLE ASSEMBLY - Aileron control, torque tube to aileron	2	
	14300-28	A	CABLE ASSEMBLY - Aileron control, torque tube to aileron	2	
-5			DELETED		
	42722-02	A	TURNBUCKLE ASSEMBLY - Control cable	1	
-6	81352-11		LINK - Connecting, aileron cable (2.125 L.)	1	
	81352-32		LINK - Connecting, aileron cable (2.312 L.)	1	
-7	80421-00		PULLEY - Fibre, 1-3/4 “	6	
-8	80012-03		BUSHING	4	
-9	40991-00		PULLEY	4	
-10	80012-04		BUSHING	2	
-11	81342-42		WASHER - Spacer	4	
-12	40731-00		PLATE - Rub, cable	3	
-13	40701-00		FAIRLEAD - Cable	8	
-14	40081-00		RING - Snap, fairlead	4	

A - Used on PA-18-150 seaplanes.
B - See latest revision of Piper Service Bulletin 181.

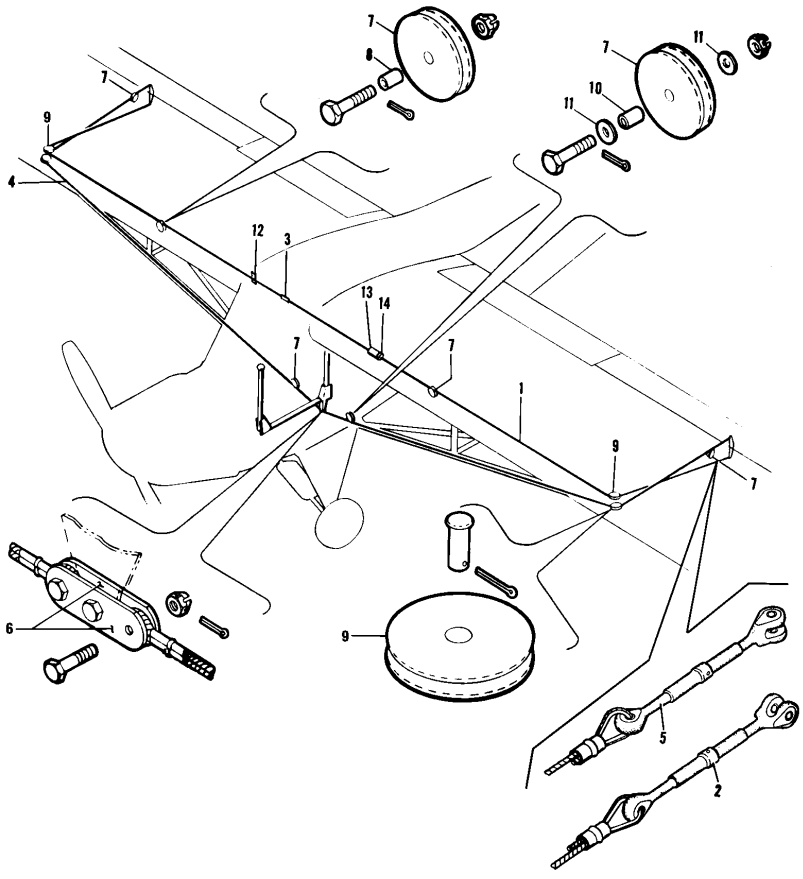

Figure 43. Aileron Control System

PIPER PARTS CATALOG

Figure and Index Number	Part Number	Code	NOMENCLATURE	No. Req.	SERIAL NUMBERS AFFECTED
44-1	10865-00	B	CABLE ASSEMBLY - Rudder	2	
	10865-05	A,B	CABLE ASSEMBLY - Rudder	2	
-2	80421-00		PULLEY	2	
-3	80122-18		WASHER	4	
-4	80012-04		BUSHING - Insert	2	
-5	40071-00		FAIRLEAD - Cable, segment	8	
-6	40081-00		RING - Snap	4	
			A - Stainless steel cables. Also used on PA-18-150 Seaplanes.		
			B - See latest revision of Piper Service Bulletin 485 for serial numbers 18-7309016 to 18-7609001 inclusive.		

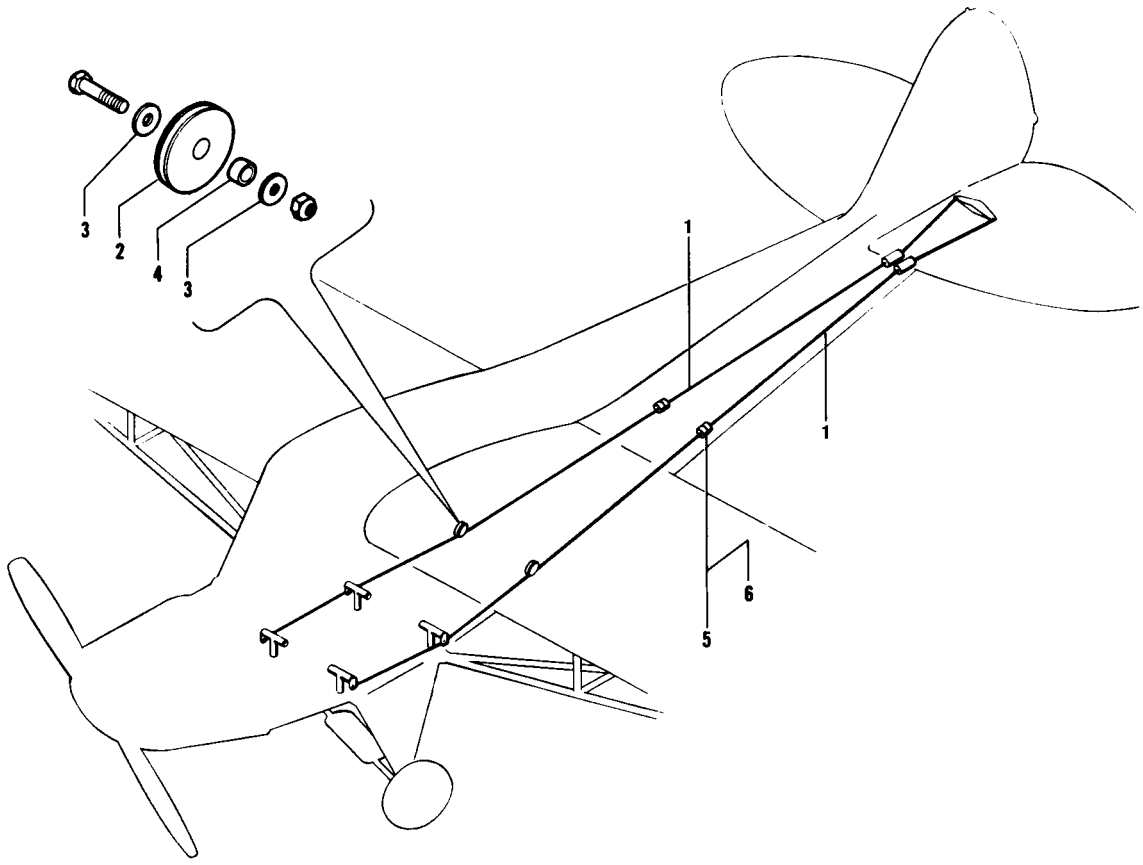

Figure 44. Rudder Control System

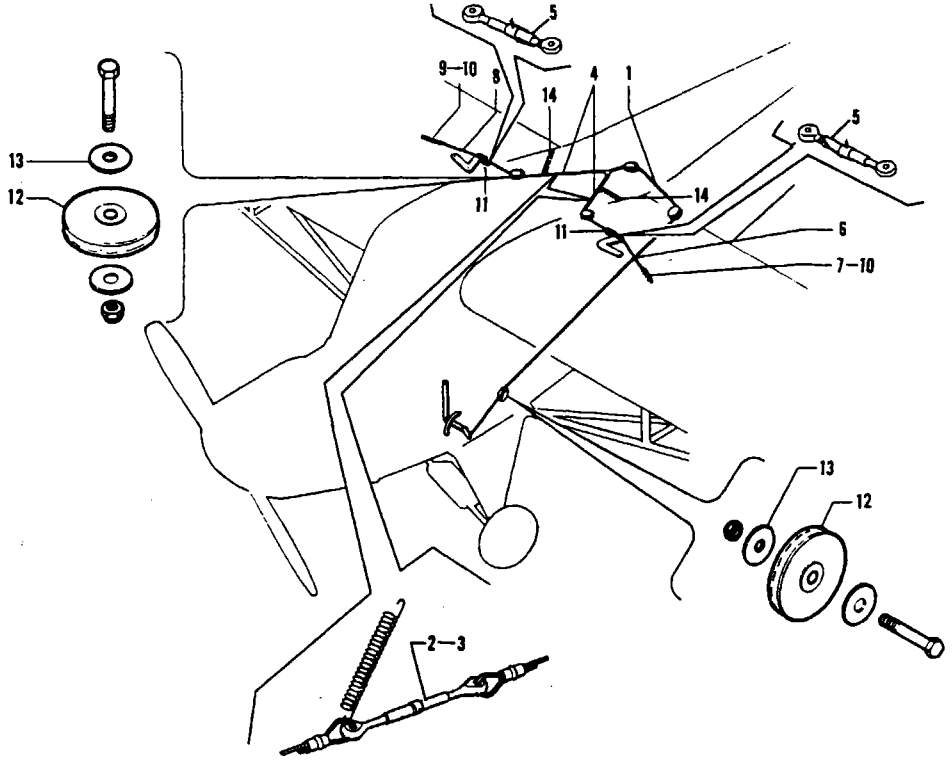

Figure 45. Flap Control System

PIPER PARTS CATALOG

Figure and Index Number	Part Number	Code	NOMENCLATURE	No. Req.	SERIAL NUMBERS AFFECTED
45-1	12794-00	C,D	CABLE ASSEMBLY - Flap control, “105”, “125”, “135” and “150 “, in fuselage	1	(PA-18 only)
	12794-04	A,B	CABLE ASSEMBLY - Flap control, “105”, “125”, “135” and “150 “in fuselage	1	(PA-18 only)
	13271-00		CABLE ASSEMBLY - Flap control in fuselage	1	(PA-18A only)
	13271-03	A	CABLE ASSEMBLY - Flap control in fuselage	1	(PA-18A only)
-2	459 934		EYE - (NAS647-16LS)	2	(PA-18A only)
	452 009		TURNBUCKLE BARREL - (NAS649-B16S)	2	(PA-18A only)
	459 932		EYE - (NAS647-16RS)	2	(PA-18A only)
-3	459 940	A	EYE - (NAS647-16LS)	2	(PA-18A only)
	452 009	A	TURNBUCKLE BARREL - (NAS649-B16S)	2	(PA-18A only)
	459 939	A	EYE - (NAS647-16RS)	2	(PA-18A only)
-4	40123-77	C	CABLE ASSEMBLY - Flap control, upper “105”, “125”, “135” and “150 “	2	(PA-18 only)
	14300-27	A,B	CABLE ASSEMBLY - Flap control, upper, “105”, “125”, “135” and “150 “	2	(PA-18 only)
-5	42722-00		TURNBUCKLE ASSEMBLY - Control cable	1	
	42722-02	A	TURNBUCKLE ASSEMBLY - Control cable	1	
-6	11694-02		CABLE ASSEMBLY - Flap return “105”, “125” and “135”, LH	1	18-1 to 18-3770 inclusive 18-3772 to 18-3780 inclusive
	11694-04	A	CABLE ASSEMBLY - Flap return, LH, “105”, “125” and “135”	1	18-1 to 18-3770 inclusive 18-3772 to 18-3780 inclusive
-7	10940-00		SPRING	1	18-1 to 18-3770 inclusive 18-3772 to 18-3780 inclusive
-8	11694-03		CABLE ASSEMBLY - Flap return (used when fuel tank is not installed) RH, “105” and “125”	1	18-1 to 18-1969 Inclusive
	11694-02		CABLE ASSEMBLY - Flap return (used when fuel tank is installed) RH, “105”, “125” and “135”)	1	18-1 to 18-3770 inclusive 18-3772 to 18-3780 inclusive
	11694-05	A	CABLE ASSEMBLY - Flap return (used when fuel tank is not installed) RH, “105” and “125”	1	18-1 to 18-1969 inclusive
	11694-04	A	CABLE ASSEMBLY - Flap return (used when fuel tank is installed) RH, “105”, “125” and “135”	1	18-1 to 18-3770 inclusive 18-3772 to 18-3780 inclusive
-9	10940-00		SPRING	1	18-1 to 18-3770 inclusive 18-3772 to 18-3780 inclusive
-10	487 328		SPRING - Flap return (14384-00) “135” and “150 “	2	18-3771, 18-3781 and up
-11	81262-14		LINK - Cable to bellcrank	4	
-12	41001-00		PULLEY - “105”, “125”, “135” and “150 “	5	(PA-18 only)
	41001-00		PULLEY - “125”, “135” and “150 “	6	(PA-18A only)
-13	81342-11		WASHER - “105”, “125”, “135” and “150 “	5	(PA-18 only)
	80122-25		WASHER - “125, “135” and “150 “	4	(PA-18A only)
-14	487 291		SPRING - Flap cable installation	2	(PA-18A only)

A - Used if stainless steel cables are installed.
B - Also used on PA18-150 seaplanes.
C - See latest revision of Piper Service Bulletin 181.
D - See latest revision of Piper Service Letter 188 and reference Kit number 752-236.

When ordering, always specify Part Number, Description, and Serial Number of Aircraft

Figure and Index Number	Part Number	Code	NOMENCLATURE	No. Req.	SERIAL NUMBERS AFFECTED
46-	13255		DRAWING - Stabilizer Adjustment Cable Installation		(PA-18A only)
	12545	B	DRAWING - Stabilizer Adjustment Cable Installation		
	14486		DRAWING - Stabilizer Adjustment Cable Installation		(PA-18 only) 18-3771, 18-3781 and up
-1	41671-13		CABLE ASSEMBLY - Stabilizer adjustment	1	18-1 to 18-548 inclusive
	41671-17		CABLE ASSEMBLY - Stabilizer adjustment	1	18-549 and up
	41671-15	A	CABLE - Stabilizer adjustment, "105"	1	
	41671-19	A	CABLE - Stabilizer adjustment, "125", "135" and "150"	1	
-2	42664-03		WIRE - Stabilizer indicator	1	
-3	43001-00		PULLEY - Stabilizer adjustment control cable, 1 inch	2	18-549 and up
-4	80122-18		WASHER - Stabilizer adjustment pulley	4	18-549 and up
-5	12695-00		BLOCK - Rubbing, stabilizer control cable, rear	1	18-1 to 18-548 inclusive
-6	40721-00		BLOCK - Rubbing, stabilizer control cable, front	1	
-7	40731-00		PLATE - Rub (2 per ship 1950 model)	1	
-8	42911-00		FAIRLEAD - Stabilizer indicator wire	1	18-549 and up
-9	80012-04		BUSHING - Insert	2	18-549 and up

A - Stainless steel cables used when floats installed on airplanes Models PA-18 and PA-18A "105", "125", "135" and "150".

B - Used on PA-18 airplanes with serial numbers 18-1 to 18-3770 inclusive, 18-3772 to 18-3780 inclusive.

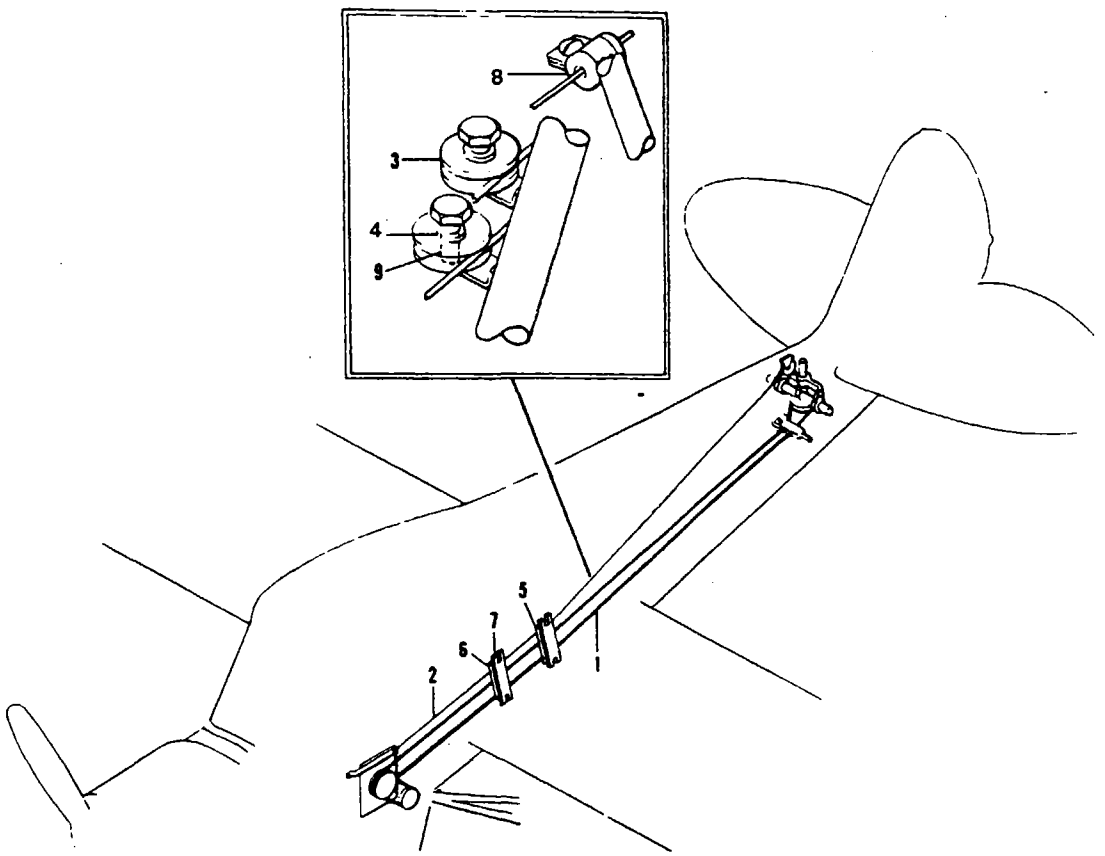

Figure 46. Adjustment Stabilizer Control System

1H23 THRU 1H24

INTENTIONALLY LEFT BLANK

PIPER PARTS CATALOG

Figure and Index Number	Part Number	Code	NOMENCLATURE	No. Req.	SERIAL NUMBERS AFFECTED
47-	12545		DRAWING - Stabilizer Adjustment Crank Installation (Revision letter AF, date 8/4/49)		18-1 to 18-548 inclusive
	12999		DRAWING - Stabilizer Adjustment Crank Mechanism Installation		18-549 and up
-1	60291-02		CRANK ASSEMBLY - Stabilizer adjustment	1	
-2	41101-00	A	PLATE - Escutcheon	1	
-3	42891-00		SPRING - Indicator wire	1	
-4	41121-00		INDICATOR ASSEMBLY	1	
-5	10936-00		PLATE - Indicator cover	1	
-6	41151-00		SPRING - Stabilizer crank escutcheon plate	1	
-7	12983-00		PULLEY	1	18-549 and up
	10080-00		PULLEY	1	18-1 to 18-548 inclusive
-8	12105-00		PIN - Crankshaft	1	
-9	81761-11	A	PIN - Crank locking	1	
	480 731	B	PIN - (59-028-125-0750)	1	
-10	81761-04		PIN - Crank pulley locking	1	
-11	80122-18		WASHER - Spacer	2	18-549 and up
-12	80421-00		PULLEY	1	18-549 and up
-13	80012-04		BUSHING - Insert	1	18-549 and up

A - Used on serial numbers 18-1 to 18-7809131 inclusive and on 18-7809134.
B - Used on serial numbers 18-7809132, 18-7809133 and 18-7809135 and up.

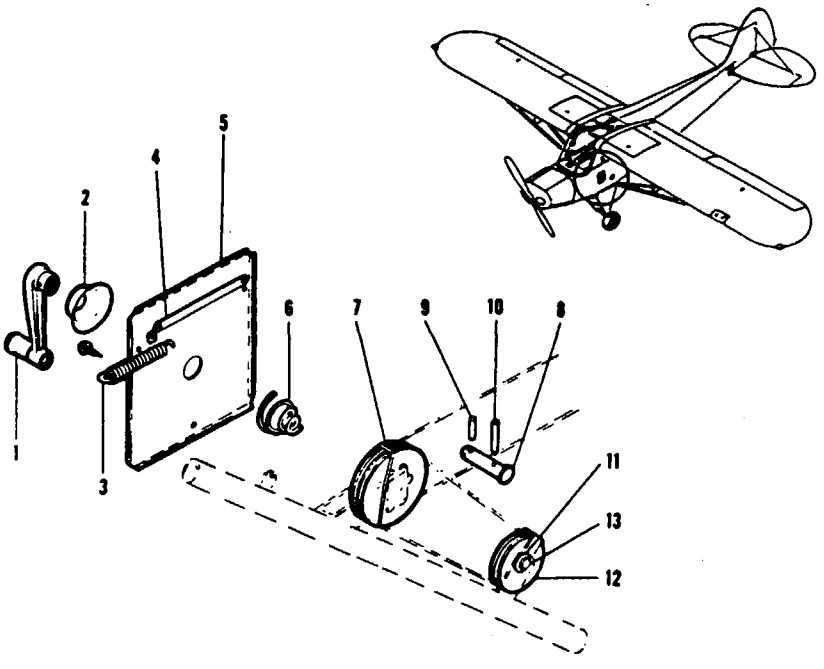

Figure 47. Stabilizer Adjustment Crank Installation

INTENTIONALLY LEFT BLANK

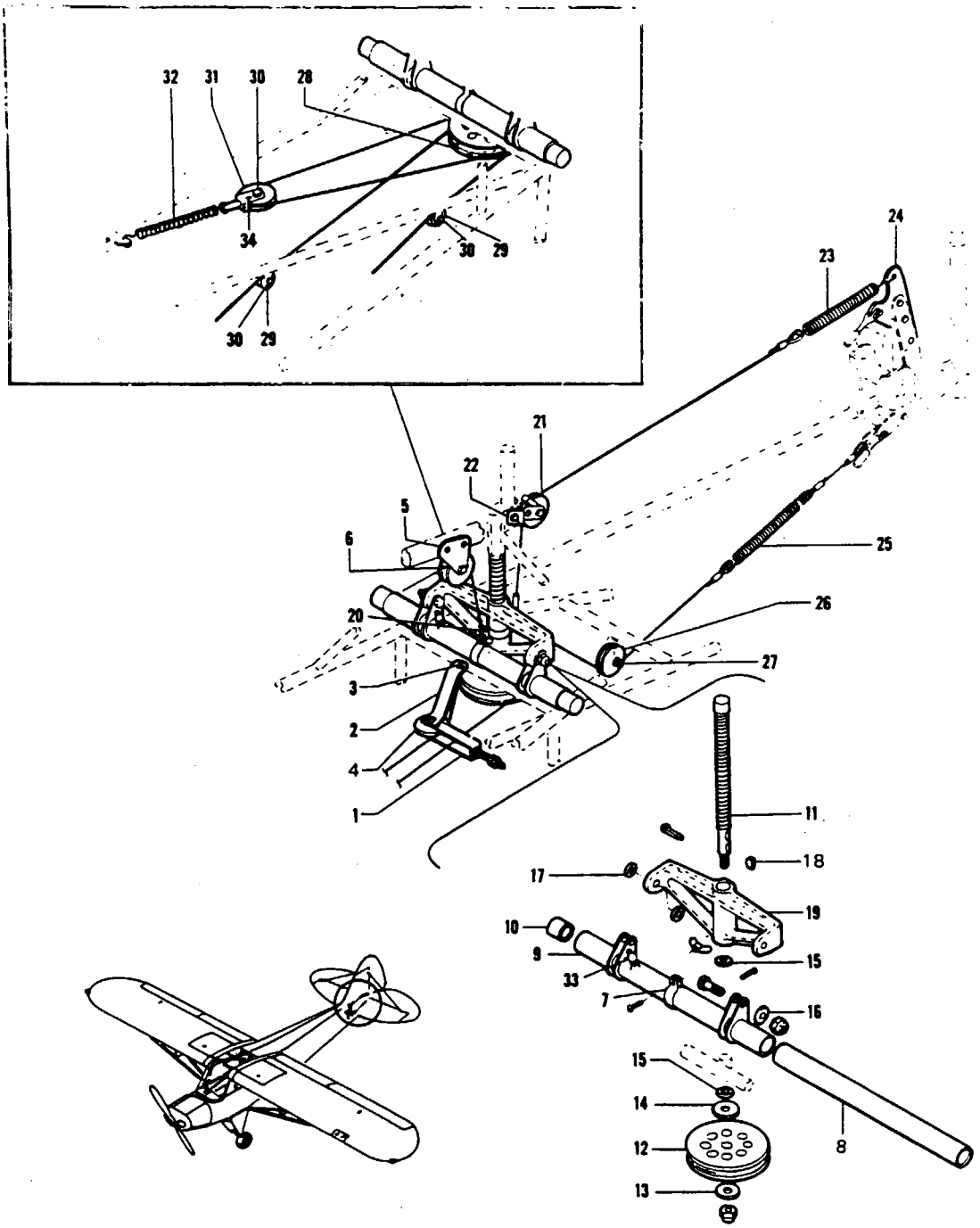

Figure 48. Stabilizer Adjustment Yoke and Bungee Installation

PIPER PARTS CATALOG

Figure and Index Number	Part Number	Code	NOMENCLATURE	No. Req.	SERIAL NUMBERS AFFECTED
			NOTE See Figure 42 for Bungee cables.		
48-	13000		DRAWING - Stabilizer Adjustment Mechanism Installation		18-549 and up
	42664		DRAWING - Stabilizer Adjustment Mechanism Installation		18-1 to 18-548 inclusive
	12263		DRAWING - Bungee Installation, "105", "125", "135" and "150"		
	10982		DRAWING - Bungee Installation, "95"		
-1	40651-00		YOKE ASSEMBLY - Idler	1	18-1 to 18-548 inclusive
-2	81322-03		LINK - Idler yoke attachment	1	18-1 to 18-548 inclusive
-3	80122-07		WASHER - Link	1	18-1 to 18-548 inclusive
-4	80421-00		PULLEY	1	18-1 to 18-548 inclusive
-5	40821-03		FITTING - Pulley	2	(PA-18 only)
-6	80421-00		PULLEY	1	
-7	80002-15		CLAMP	1	18-1 to 18-2944 incl. and 18-2980
	10466-28	A	CLAMP	1	
-8	86062-80		TUBE - Liner	1	
-9	14180-02		LINK ASSEMBLY	1	
-10	14177-00	A	BUSHING - Insert, brass	2	
-11	42961-02		SCREW - Stabilizer adjustment	1	
-12	11008-00		PULLEY	1	18-1 to 18-548 inclusive
-13	80122-41		WASHER	1	
-14	81342-05		WASHER	1	
-15	85012-12		WASHER	2	
-16	80122-24		WASHER	2	
-17	81342-08		WASHER	4	
-18	41631-00		KEY	1	
-19	42692-00		YOKE ASSEMBLY - Stabilizer adjustment	1	
-20	85211-00		CLAMP	1	
-21	80421-00		PULLEY	1	
-22	81381-00		HOUSING ASSEMBLY - Bungee pulley	1	
-23	10940-02		SPRING - Cable attachments	1	
-24	10449-00		LINK - Upper horn	1	
-25	10940-02	B	SPRING - Cable attachment	1	
-26	80421-00	B	PULLEY - Lower	1	
-27	80012-04	B	BUSHING - Insert	1	
-28	12982-00		PULLEY	1	18-549 and up
-29	43001-00		PULLEY	1	18-549 and up
-30	80122-18		WASHER	6	18-549 and up
	80012-04		BUSHING - Insert	3	18-549 and up
-31	80421-00		PULLEY	1	18-549 and up
-32	81411-02		SPRING - Tension	1	18-549 and up
-33	460 693	A	FITTING - Grease (No. 1688)	1	
-34	11692-05		BRACKET - Pulley	1	18-549 and up
			A - Used on airplanes with serial numbers 18-2945 to 18-2979 inclusive and 18-2981 and up. B - Used when floats are installed on PA-18-105 airplanes.		

115

INTENTIONALLY LEFT BLANK

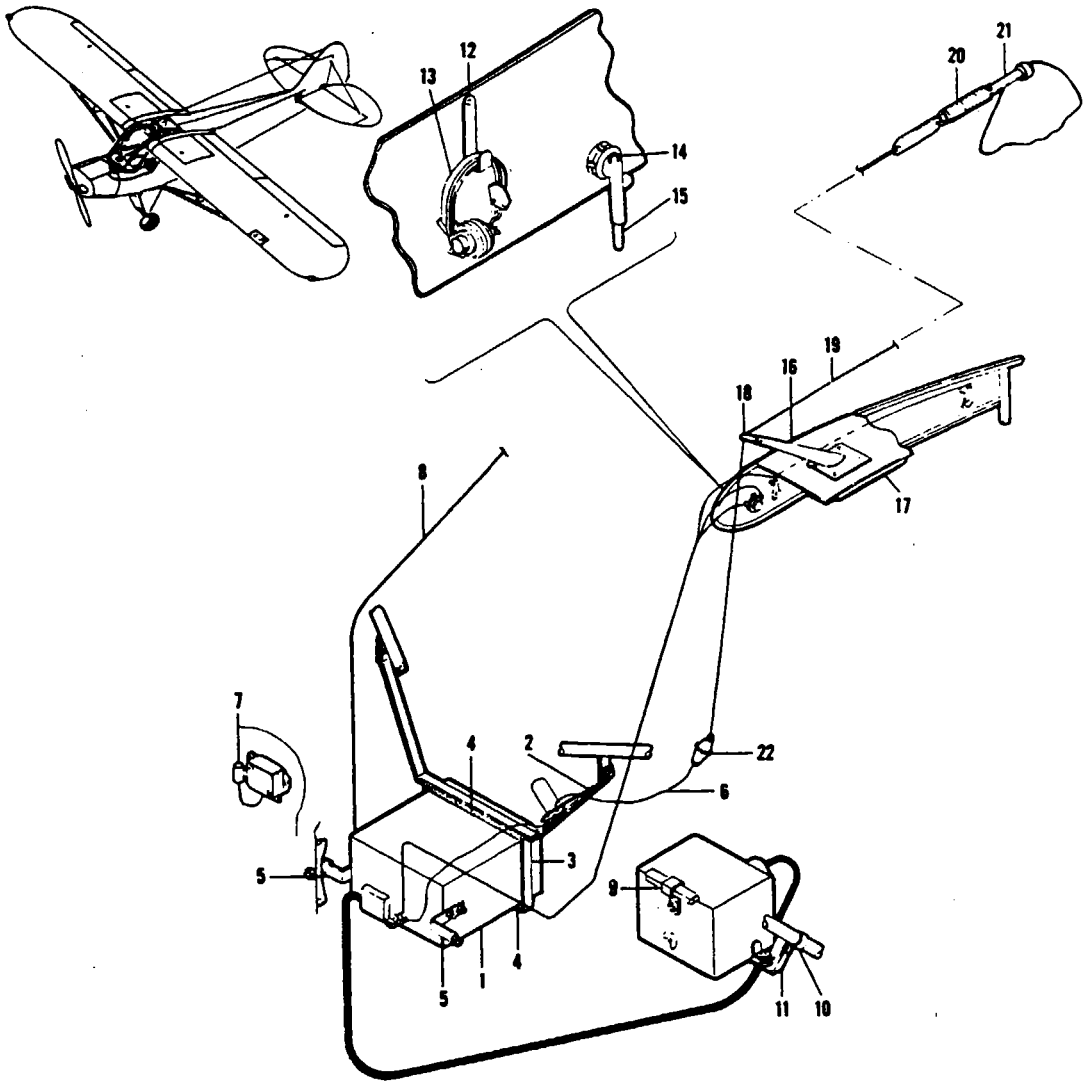

Figure 49. Radio Installation, G. E.

Figure and Index Number	Part Number	Code	NOMENCLATURE	No. Req.	SERIAL NUMBERS AFFECTED
49-	12886		DRAWING - Radio Installation		
-1			RADIO - G.E. AK32, (not available thru Piper Aircraft Corporation, secure from General Electric)	1	
-2	12880-00		BRACKET - Radio hanger mounting	1	
-3	12882-00		BRACKET - Radio mounting support	1	
-4	85512-03		STRIP - Rubber radio installation (at mounting bracket)	2	
-5	12878-00		ANGLE - Radio front attachment (at firewall)	2	
-6	10128-72		WIRE ASSEMBLY - Antenna, (insulator to loading coil)	1	
-7	487 640		SUPPRESSOR - 5MFD, 120 working volts	1	
-8	12177-75		WIRE ASSEMBLY - Circuit breaker to radio	1	
-9	12885-00		CLAMP - Square, top (power unit attachment)	1	
-10	80032-46		CLAMP - Bottom (power unit attachment)	2	
-11	12879-00		BRACKET - Power supply mounting	1	
-12	12883-00		HOOK ASSEMBLY - Headphone	1	
-13	464 326		HEADPHONE - Radio	1	
-14	474 647		MICROPHONE - (Telephonics #RS-38A)	1	
	474 649		MICROPHONE - (TEL-66C)	1	
-15	459 864		PHONE EXTENSION	1	
-16	12176-00		MAST ASSEMBLY - Antenna	1	
-17	11473-35		PLATE - Antenna mast attachment	1	
-18	467 050		INSULATOR - Short, at antenna mast	1	
-19	153 026		WIRE - Antenna, copper, 18 gauge	17'	
-20	751 124		SPRING AND INSULATOR ASSEMBLY - Antenna	1	
-21	10824-00		ANGLE - Antenna attachment	1	
-22	467 062		INSULATOR - Windshield	1	

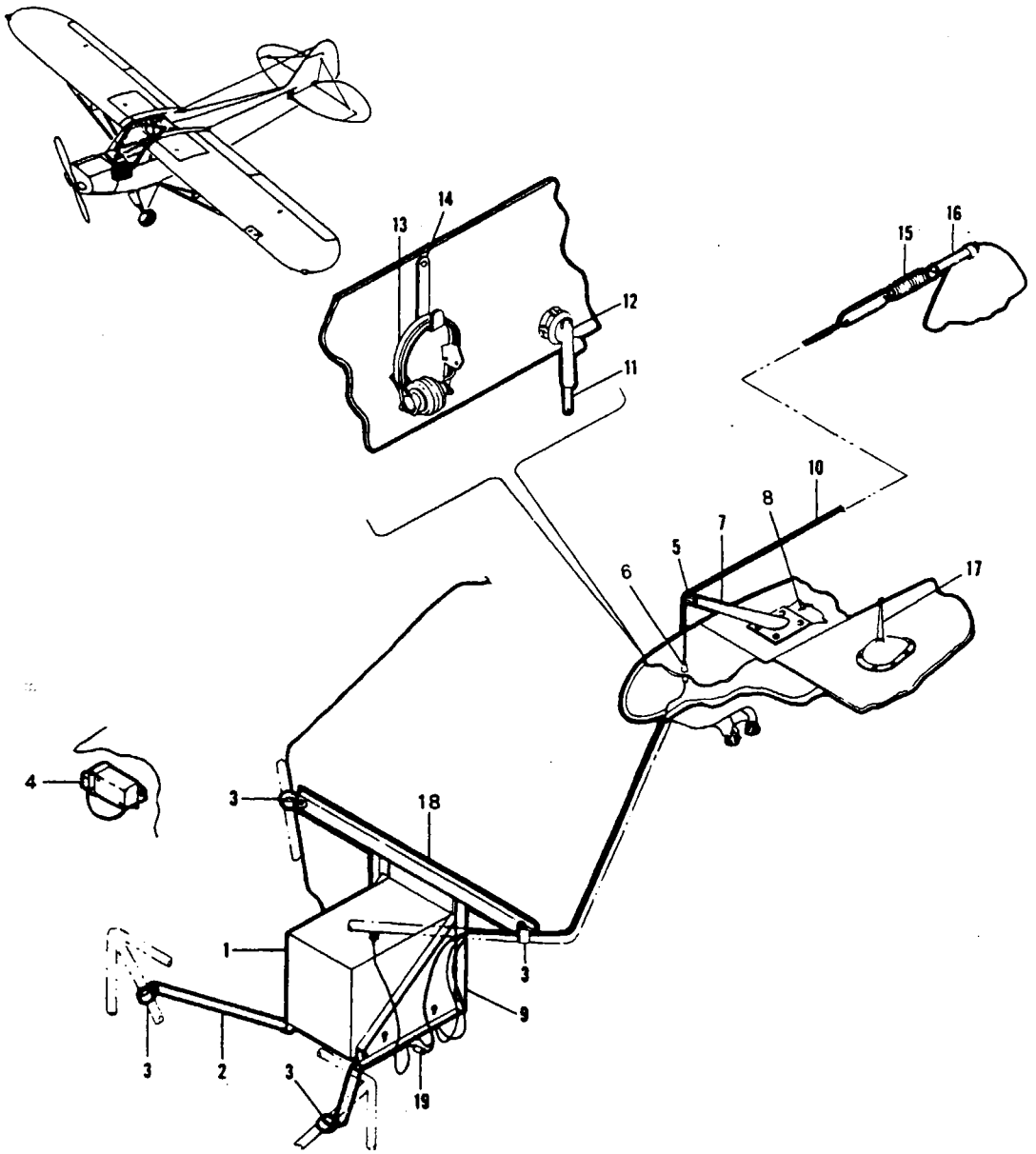

Figure 50. Radio Installation, Bendix PATR-10A

Figure and Index Number	Part Number	Code	NOMENCLATURE	No. Req.	SERIAL NUMBERS AFFECTED
50-	13021		DRAWING - Radio Installation		
	12957		DRAWING - Radio Wire Harness		
	13011		DRAWING - Headphone and Microphone Jack Assembly NOTE: Headphone and microphone jacks not available thru Piper Aircraft Corporation, secure from Bendix Aviation Corporation.		
	12952		DRAWING - Antenna lead in wire assembly		
	752 205		KIT - Radio Installation, Less Radio	1	
-1	451 280		RADIO - Bendix PATR-10A (not available thru Piper Aircraft Corporation, secure from Bendix Aviation Corporation)	1	
-2	12948-00		BRACKET ASSEMBLY - Radio mounting support	1	
-3	80032-52		CLAMP - Radio mounting bracket and angle attachment	4	
-4	487 640		SUPPRESSOR - 5MFD, 120 working volts	1	
-5	467 050		INSULATOR - Short, at antenna mast	1	
-6	467 062		INSULATOR - (Windshield)	1	
-7	12176-00		MAST ASSEMBLY - Antenna	1	
-8	11473-35		PLATE - Antenna, mast attachment	1	
-9	12947-00		PANEL - Radio mounting	1	
-10	153 026		WIRE - Antenna, copper weld, No. 18 gauge	17'	
-11	459 864		PHONE EXTENSION	1	
-12	474 647		MICROPHONE - (Telephonics #RS-38A)	1	
	474 649		MICROPHONE - (TEL-66C)	1	
-13	464 326		HEADPHONE - Radio	1	
-14	12883-00		HOOK ASSEMBLY - Headphone	1	
-15	751 124		SPRING AND INSULATOR ASSEMBLY - Antenna	1	
-16	10824-00		ANGLE - Antenna attachment, at rudder	1	
-17			VHF Antenna (not available thru P.A.C.) (Secure from Bendix Aviation Corporation)	1	
-18	12949-00		ANGLE - Radio panel mounting	1	
-19	455 160		CONNECTOR - VHF Antenna, No. 221	1	

When ordering, always specify Part Number, Description and Serial Number of Aircraft

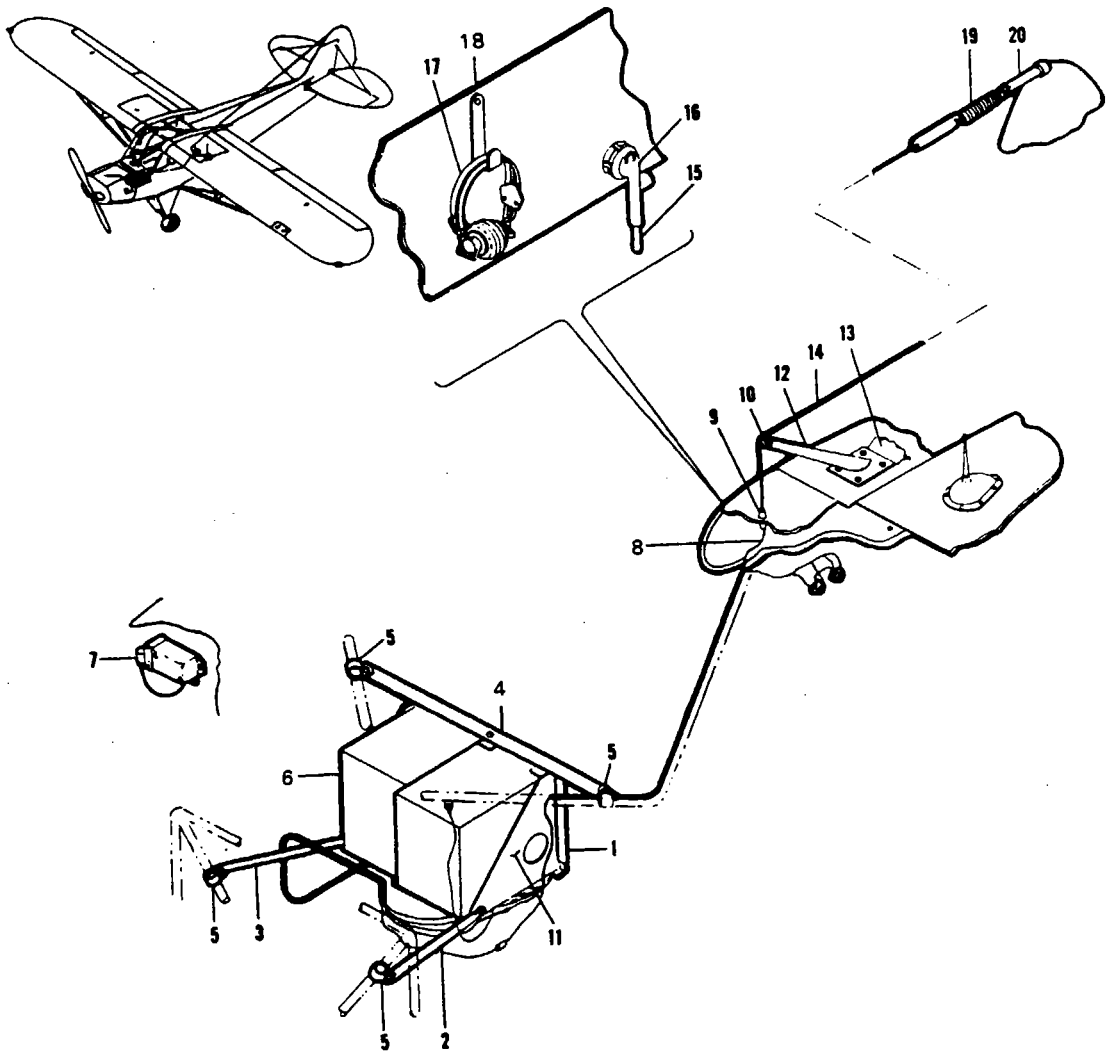

Figure 51. Radio Installation, Bendix PAT-50A

PIPER PARTS CATALOG

Figure and Index Number	Part Number	Code	NOMENCLATURE	No. Req.	SERIAL NUMBERS AFFECTED
51-	13338		DRAWING - Radio Installation		
	13011		DRAWING - Headphone and Microphone Jack Assembly (Not available thru Piper Aircraft Corporation, secure from Bendix Aviation Corporation)		
	13329		DRAWING - Harness Assembly, Receiver and Transmitter		
-1	13211-00		PANEL - Radio face	1	
-2	13210-02		TUBE - Radio support, LH	1	
-3	13210-03		TUBE - Radio support, RH	1	
-4	12949-00		ANGLE - Radio panel, mounting	1	
-5	80032-52		CLAMP - Mounting bracket, attachment	4	
-6			RADIO - (Transmitter and receiver) (Not available thru Piper Aircraft Corporation, secure from Bendix Aviation Corporation)	1	
-7	487 640		SUPPRESSOR - 5MFD, 120 working volts	1	
-8	12952-02		WIRE ASSEMBLY - Antenna, lead in	1	
-9	467 062		INSULATOR - (Windshield)	1	
-10	467 050		INSULATOR - (Short) antenna mast	1	
-11	13209-00		BRACKET ASSEMBLY - Radio mounting	1	
-12	12176-00		MAST ASSEMBLY - Antenna	1	
-13	11473-35		PLATE - Antenna mast attachment	1	
-14	153 026		WIRE - Antenna, copper, No. 18 gauge	17'	
-15	459 864		PHONE EXTENSION - (CD-307)	1	
-16	474 647		MICROPHONE - (Telephonics #RS-38A)	1	
	474 649		MICROPHONE - (TEL-66C)	1	
-17	464 326		HEADPHONE - (HS33)	1	
-18	12883-00		HOOK ASSEMBLY - Headphone	1	
-19	751 124		SPRING AND INSULATOR ASSEMBLY - Antenna	1	
-20	10824-00		ANGLE - Antenna attachment	1	

When ordering, always specify Part Number, Description and Serial Number of Aircraft

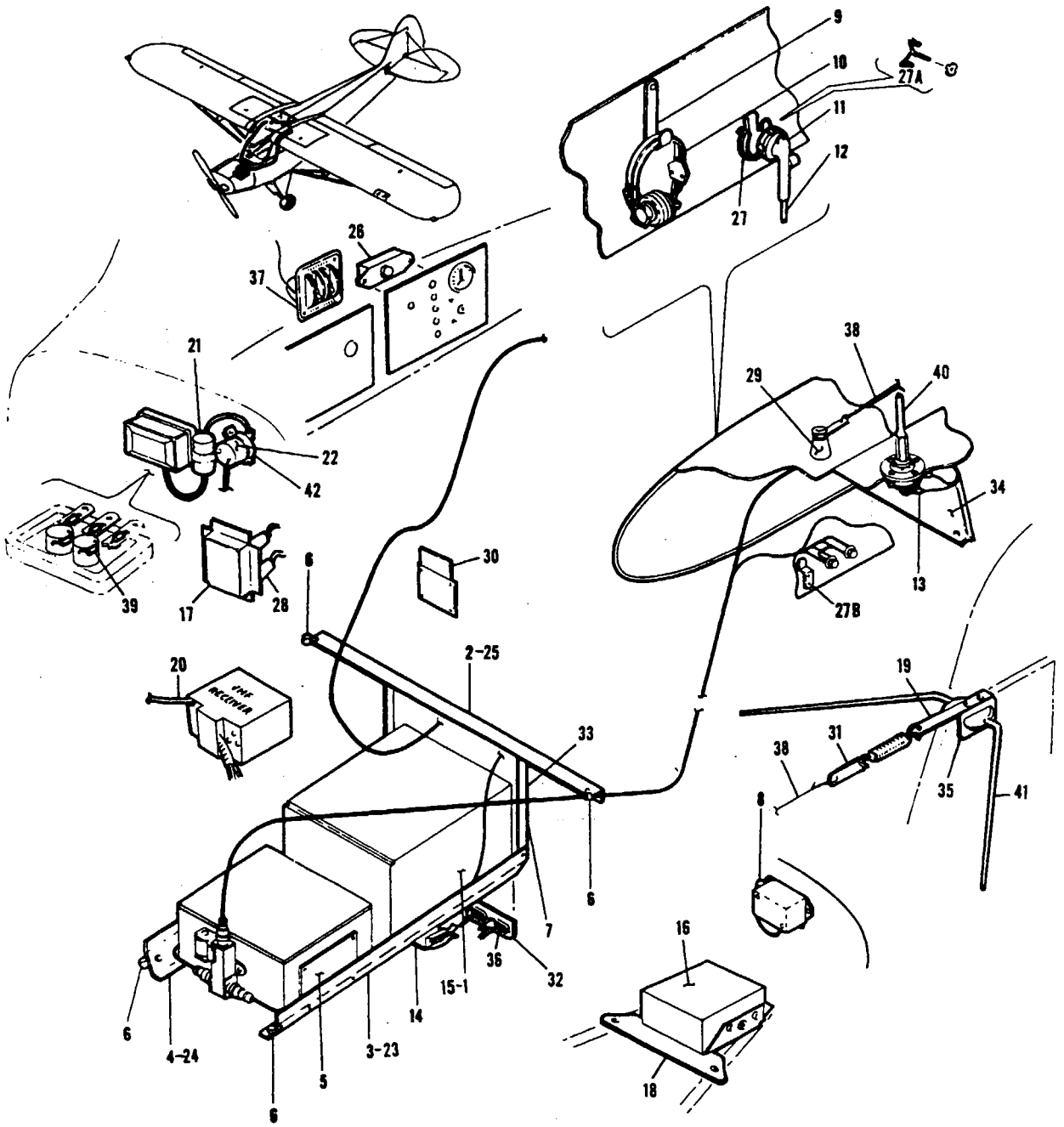

Figure 52. Radio Installation, Lear

Figure and Index Number	Part Number	Code	NOMENCLATURE	No. Req.	SERIAL NUMBERS AFFECTED
52-	13353	AB	DRAWING - Rad io Installation		
	14519	C	DRAWING - Radio Installation		18-3771, 18-3781 and up
-1			RADIC - Laar LTRA-5 (Not available through Piper Aircraft Corporation, secure from Lear, Incorporated)	1	
-2	12949-02	B	ANGLE - Radio mounting	1	
-3	13330-00	B	CHANNEL - Radio mounting, LH	1	
-4	13330-01	B	CHANNEL - Radio mounting, RH	1	
-5	13326-00	B	BRACKET ASSEMBLY - Radio support, LH	1	
	13326-01	B	BRACKET ASSEMBLY - Radio support, RH	1	
-6	80032-52	B	CLAMP - Radio mounting bracket	4	
-7	13325-00	B	PANEL - Radio mounting	1	
-8	487 640	B	SUPPRESSOR - (5MFD 120 working volt)	1	
-9	12883-00	B	HOOK ASSEMBLY - Headphone	1	
-10	464 326	B	HEADPHONE - Radio	1	
-11	474 647	B	MICROPHONE - (Telephonics (RS-38A)	1	
	474 649	B	MICROPHONE - (TEL-66C)	1	
-12	459 864	B	PHONE EXTENSION - (No. CD-307)	1	
-13	488 357	B	TERMINAL - (No. 30992)	1	
-14	13437-00	B	BRACKET - Control lock attachment	1	
-15		C	RADIO - Lear LTRA-6 VHF transmitting; VHF receiving and L.F. receiving (Not available through Piper Aircraft Corporation, secure from Lear, Incorporated)		
-16		C	DYNAMOTOR - LD-5 (Used with installation of LTRA-6) (Not abailable through Piper Aircraft Corporation, secure from Lear, Incorporated)		
-17	14311-18	C	BOX ASSEMBLY - Magneto filter	1	
-18	14598-00	C	BRACKET ASSEMBLY - Mounting, dynamotor	1	
-19	14572-00	C	BRACKET ASSEMBLY - L.F. antenna attachment on fin	1	
-20	16933-06	C	CABLE - Co-ax, VHF receiver (14564-03)	1	
-21	454 046	C	CAPACITOR - (AG-452) at regulator generator side	1	
-22	454 064	C	CAPACITOR - (HLV525) at regulator battery side	1	
-23	14574-00	C	CHANNEL - Radio mounting, LH	1	
-24	14574-01	C	CHANNEL - Radio mounting, RH	1	
-25	14576-00	C	CHANNEL - Radio panel mounting, front	1	
-26	454 657		CIRCUIT BREAKER (PS50120-3-12) 10 amp	1	
-27	454 889		CLIP - Microphone (Used with Telephonics Mike RS-38A)	1	
-27a	23303-00		HOLDER - Microphone (Used with Telephonics Mike RS-38A)	1	
	23302-00		WASHER - Microphone (Used with Telephonics Mike RS-38A)	1	
-27b	453 415		BRACKET - Microphone (Used with Telex Mike 66C)	1	
-28	460 634	C	FILTER - Magneto (NF1F-247)	2	
-29	467 062	C	INSULATOR - L.F. antenna at fairing (135-42)	1	
-30	470 645	C	KIT - Compass deviation card and holder (14364)	1	

A - Used on airplanes with serial numbers 18-1970 to 18-3770 inclusive, 18-3772 to 18-3780 inclusive.
B - Used when LTRA-5 is installed.
C - Used when LTRA-6 is installed.

When ordering, always specify Part Number, Description and Serial Number of Aircraft

PIPER PARTS CATALOG

Figure and Index Number	Part Number	Code	NOMENCLATURE	No. Req.	SERIAL NUMBERS AFFECTED
52-31	17955-00	A	LINK - Antenna wire attachment at fin	1	
-32	14602-00	A	PANEL - Switch mounting	1	
-33	14590-00	A	PANEL ASSEMBLY - Radio mounting	1	
-34	14673-00	A	PLATE - Mounting VHF transmitting antenna	1	
-35	14296-00	A	PLATE - Trim, antenna installation on fin	2	
-36	487 790	A	SWITCH - #110-S-73, radio, at instrument panel	2	
-37	15302-02	A	SWITCH ASSEMBLY - Ignition (shielded) used with radio installation	1	
-38	153 026	A	WIRE - Antenna #18 gauge	15'	
-39	454 051	A	CAPACITOR - DD-102 x 3/8" dia.	5	
-40	451 272	A	ANTENNA - Whip, transmitting, (VTP-10)	1	
-41	14580-00	A	ANTENNA - VHF receiving on fin (VRP-37)	1	
-42	454 874	A	CLAMP - #CMC22, capacitor attachment	1	

A - Used when LTRA-6 is installed.

When ordering, always specify Part Number, Description and Serial Number of Aircraft

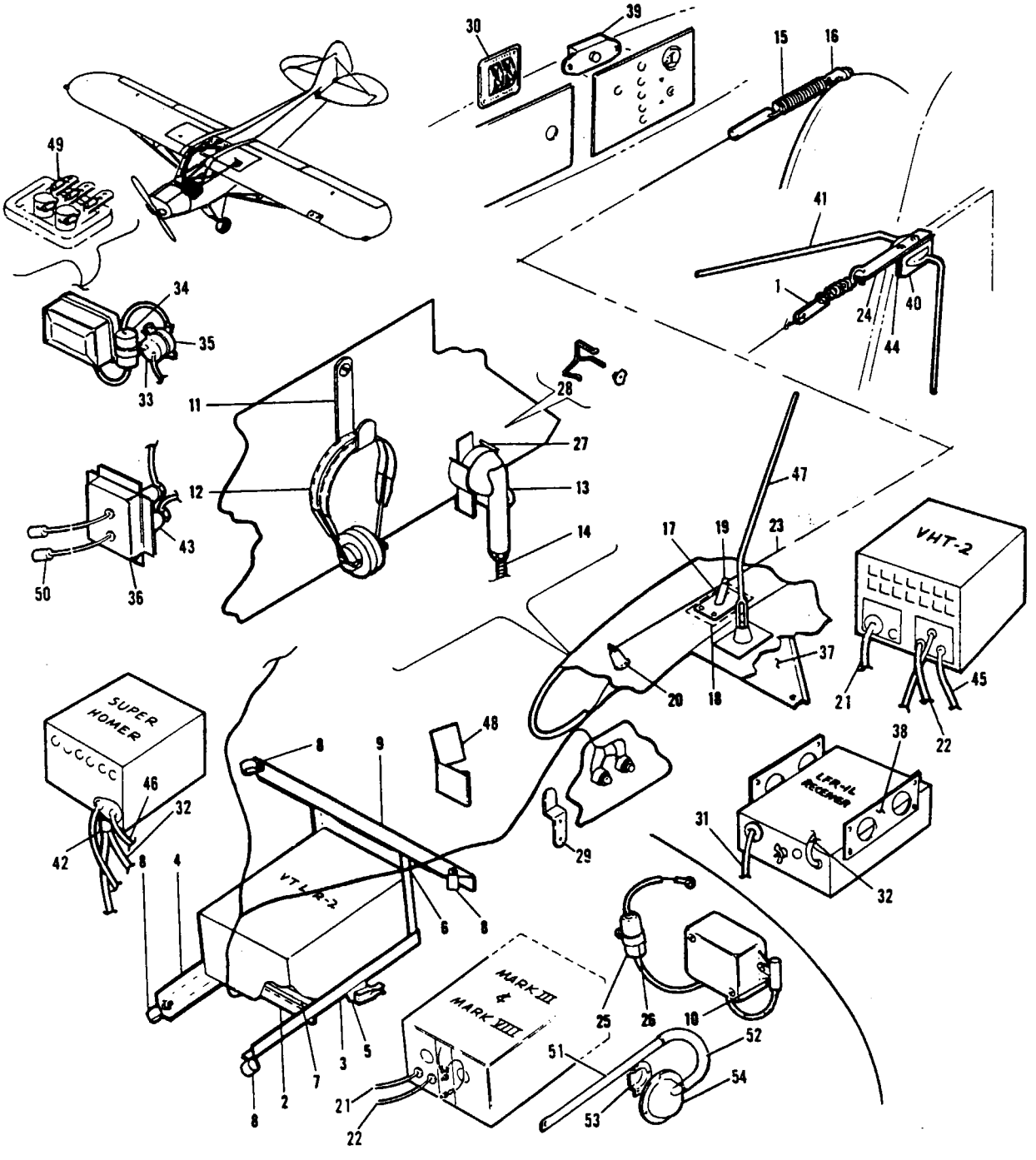

Figure 53. Radio Installation, Narco
(Serial Nos. 18-1970 to 18-8951 inclusive)

Figure and Index Number	Part Number	Code	NOMENCLATURE	No. Req.	SERIAL NUMBERS AFFECTED
53-	13954	A	DRAWING - Radio Installation		
	14589	C	DRAWING - Radio Installation (Narco) for VTLR-2, L.F. Receiver and Super Homer Radios		
	15295		DRAWING - Radio Installation (Narco Mark III)		18-8355 to 18-8780 inclusive
	15295		DRAWING - Radio Installation (Narco Mark VIII)		18-8781 to 18-8951 inclusive
-1	17955-00	C	LINK - Antenna wire attachment at fin	1	
-2	13949-00	A	ANGLE - Radio mounting	1	
-3	13330-00	A	CHANNEL - Radio mounting, left	1	
	14574-00	C	CHANNEL - Radio mounting, left	1	
	15264-00		CHANNEL - Radio mounting, left	1	18-8355 and up
-4	13330-01	A	CHANNEL - Radio mounting, right	1	
	14574-01	C	CHANNEL - Radio mounting, right	1	
	15264-01		CHANNEL - Radio mounting, right	1	18-8355 and up
-5	13437-00	A	BRACKET - Control lock, attachment	1	
-6	13948-00	A	PANEL - Radio mounting	1	
	14590-00	C	PANEL ASSEMBLY - Radio mounting	1	
	15251-03		PANEL ASSEMBLY - Radio mounting	1	18-8355 and up
-7	85512-09	A	STRIP - Sponge rubber, radio mounting	1	
	85512-06	B	STRIP - Sponge rubber, radio mounting	2	
-8	80032-52		CLAMP - Radio mounting, bracket	4	
-9	12949-02	A	ANGLE - Radio mounting	1	
	14576-00		CHANNEL - Radio mounting	1	18-3771, 18-3781 and up
-10	487 640	A	SUPPRESSOR - 5MFD, 120 working volts	1	
-11	12883-00		HOOK ASSEMBLY - Headphone	1	
-12	464 327		HEADPHONE - (#P-23)	1	
-13	474 647		MICROPHONE - (Telephonics #RS-38A)	1	
	474 649		MICROPHONE - (TEL-66C)	1	
-14	459 864		PHONE EXTENSION - (No. CD-307)	1	
-15	751 124		SPRING AND INSULATOR ASSEMBLY - Antenna	1	
-16	10824-00	A	ANGLE - Antenna attachment, at rudder	1	
-17	13094-00	A	MAST ASSEMBLY - Antenna, front	1	
-18	11473-35	A	PLATE - Antenna mast attachment	1	
-19	467 050	A	INSULATOR - Short (No. AA5)	1	
-20	467 062		INSULATOR - Windshield (No. 135-42)	1	
-21	16933-06	B	CABLE - VHF Receiver (used with Super Homer, Mark III or Mark VIII Radio Installation)	1	
-22	15065-00	B	CABLE - VHF Transmitting (used with VTLR-2 or Super Homer and Mark III or Mark VIII Radio Installation)	1	
-23	153 026		WIRE - Antenna, No. 18 gauge copper	21'	
-24	14572-00	C	BRACKET ASSEMBLY - L.F. Antenna attachment on fin	1	
-25	454 052	A	CAPACITOR - (TVA-1162-500 MFD)	1	
-26	13669-00	A	CLAMP	1	

A - Used on airplanes with serial numbers 18-1970 to 18-3770 inclusive, 18-3772 to 18-3780 inclusive.
B - Used on airplanes with serial numbers 18-3771, 18-3781 and up.
C - Used on airplanes with serial numbers 18-3771, 18-3781 to 18-8354 inclusive.

Figure and Index Number	Part Number	Code	NOMENCLATURE	No. Req.	SERIAL NUMBERS AFFECTED
53-27	454 889		CLIP - Microphone (used with Telephonics Mike RS-38A)	1	
-28	23303-00		HOLDER - Microphone (used with Telephonics Mike RS-38A)	1	
	23302-00		WASHER - Microphone (used with Telephonics Mike RS-38A)	1	
-29	453 415		BRACKET - Microphone (Used with Telex Mike 66C)	1	
-30	15302-02	A	SWITCH ASSEMBLY - Ignition, shielded	1	
-31	451 286	B	CABLE - Power,L.F. receiver (used with L.F. receiver installation) (14566-04)	1	
-32	21784-04	B	CABLE - L.F. Receiver (used with VTLR-2 and L.F. receiver installation) (14563-03)	1	
-33	454 064	B	CAPACITOR - HLV525 at regulator, battery side	1	
-34	19286-00	A	CAPACITOR ASSEMBLY - At regulator, generator side	1	
-35	454 874	B	CLAMP - CMC22, capacitor attachment	1	
-36	14311-23	A	BOX ASSEMBLY - Magneto filter	1	
-37	14573-00	A	PLATE - Mounting, VHF transmitting antenna	1	
-38	14575-00	B	PLATE - Reinforcement radio mounting (used to install L.F. Receiver)	2	
-39	454 657		CIRCUIT BREAKER - (PS50120-3-12)	2	
-40	14296-00	A	PLATE - Trim, antenna installation on fin (used with Super Homer, Mark III or Mark VIII Radio Installation)	2	
-41	14580-00	A	ANTENNA - V.H.F. Receiving on fin, VRP-37 (used with Super Homer, Mark III or Mark VIII Radio Installation)	1	
-42	451 261	B	DUMMY LOOP - (VRP-33 (used with VTLR-2 and L.F. Receiver Installation)	1	
-43	460 634		FILTER - Magneto (NF1F247)	2	
-44	14313-00	A	GROMMET - Trim plate, antenna installation on fin (used with Super Homer, Mark III or Mark VIII Radio Installation)	2	
-45	14585-00	B	HARNESS ASSEMBLY - Audio, VHF-4 to phone jacks (used with Super Homer Installation)	1	
-46	14586-00	B	HARNESS ASSEMBLY - Audio, VTLR-2 to phone jacks (used with VTLR-2 Installation)	1	
-47	451 272	A	ANTENNA - Whip, transmitting (VTP-17)	1	
-48	470 645		KIT - Compass deviation card and holder (14364)	1	
-49	454 051	A	CAPACITOR - (DD-102 x 3/8" dia.)	5	
-50	596 058		FILTER ASSEMBLY - Magneto (AK006)	1	
-51	15305-00	C	TUBE - Radio cooling	1	
-52	82371-89	C	HOSE - Radio cooling	1	
-53	22482-00	C	SCOOP - Radio cooling	1	
-54	22478-00	C	BOX ASSEMBLY - Radio cooling	1	

A - Used on airplanes with serial numbers 18-3771, 18-3781 and up.
B - Used on airplanes with serial numbers 18-3771, 18-3781 to 18-8354 inclusive.
C - Used with Narco Mark VIII Radio Installation only.

When ordering, always specify Part Number, Description and Serial Number of Aircraft

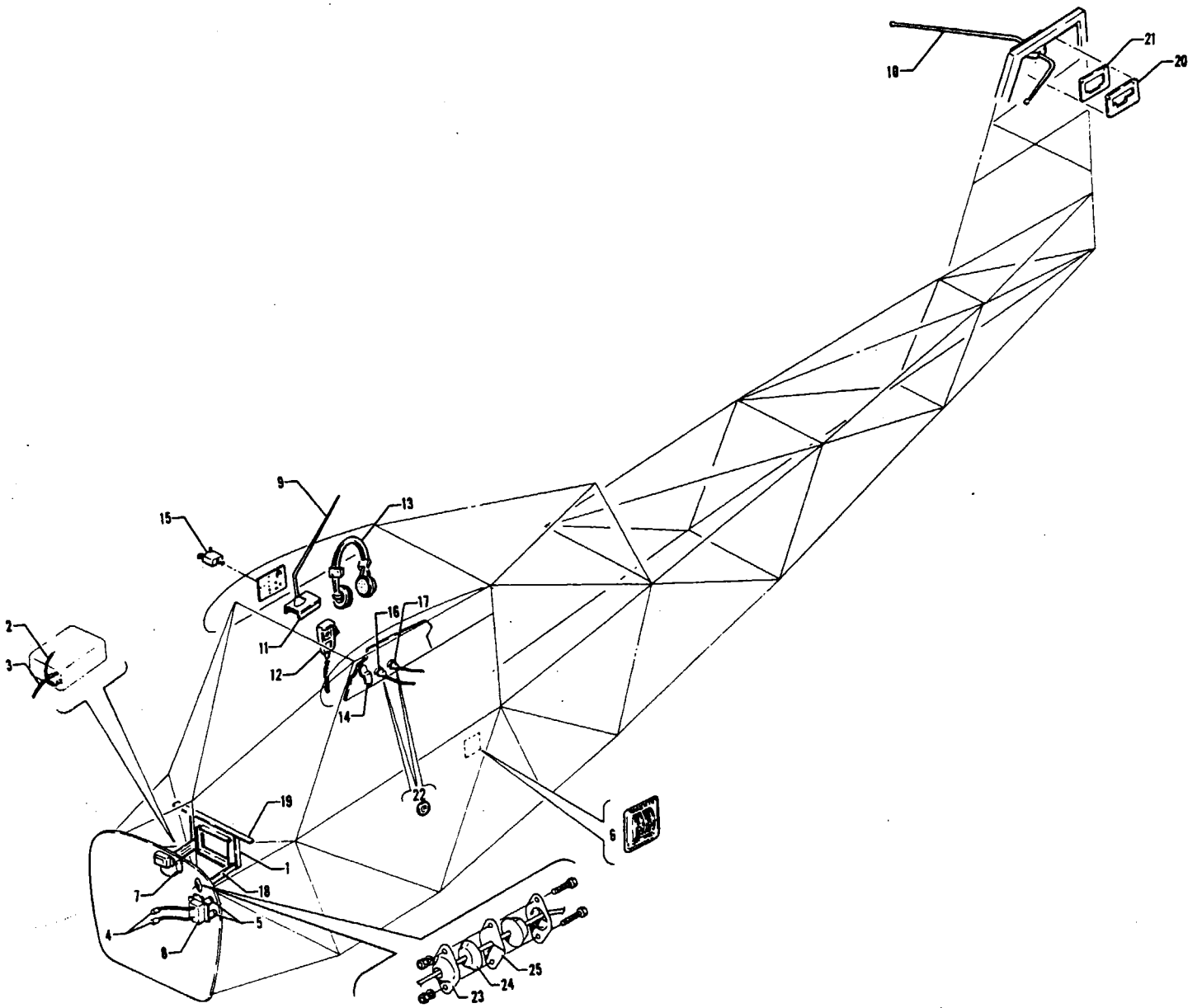

Figure 53A. Radio Installation, Genave
(Serial Nos. 18-8952 and up)

PIPER PARTS CATALOG

Figure and Index Number	Part Number	Code	NOMENCLATURE	No. Req.	SERIAL NUMBERS AFFECTED
53A-	15308		DRAWING - Genave NAV/COMM Installation		
-1	15307-00		PANEL ASSEMBLY - Radio mounting	1	
-2	16933-21		CABLE ASSEMBLY - VHF Receiver	1	
-3	24182-11		CABLE ASSEMBLY - VHF Transmitting	1	
-4	596 058		FITLER ASSEMBLY - Magneto (AK006)	2	
-5	460 634		FILTER - Magneto (NF1F247, 1MFD) 600V	2	18-8952 to 18-7909015 incl.
-6	15302-02		SWITCH ASSEMBLY - Ignition, shielded	1	18-8952 to 18-7909015 incl.
	15302-05		SWITCH ASSEMBLY - Ignition, shielded	1	18-7909016 and up
-7	19286-00		CAPACITOR ASSEMBLY - Generator	1	
-8	14311-48		BOX ASSEMBLY - Magneto filter	1	18-8952 to 18-7909015 incl.
-9	596 225		ANTENNA - Transmitter, whip (Lambda/100)	1	
-10	14580-00		ANTENNA - VHF Receiver	1	
-11	15309-00		BRACKET - Antenna mounting	1	
-12	474 654		MICROPHONE - (N/C Carbon Tel-66C)	1	
-13	464 327		HEADPHONE - (P-23, 300 OHM)	1	
-14	453 415		BRACKET ASSEMBLY - Microphone (61506-00)	1	
-15	454 657		CIRCUIT BREAKER - (PS50120-3-12)	1	
-16	468 002		JACK - Mike (S-12B)	1	
-17	468 006		JACK - Phone (11)	1	
-18	15264-00		CHANNEL ASSEMBLY - Radio mounting, left	1	
	15264-01		CHANNEL ASSEMBLY - Radio mounting, right	1	
-19	15265-00		ANGLE - Radio panel mounting (13 1/2" long)	1	
	14576-00	A	ANGLE - Radio panel mounting (17 3/4" long)	1	
-20	14296-00		PLATE - Antenna trim	2	
-21	14313-00		GROMMET - Antenna trim plate	2	
-22	494 058		WASHER - Fiber (2158)	2	
-23	22103-02		PLATE - Firewall seal grommet	2	18-7909016 and up
-24	22014-04		GROMMET - Firewall seal	2	18-7909016 and up
-25	22105-06		GROMMET - Firewall seal	1	18-7909016 and up

A - Used with full gyro panel only.

When ordering, always specify Part Number, Description and Serial Number of Aircraft

1120

INTENTIONALLY LEFT BLANK

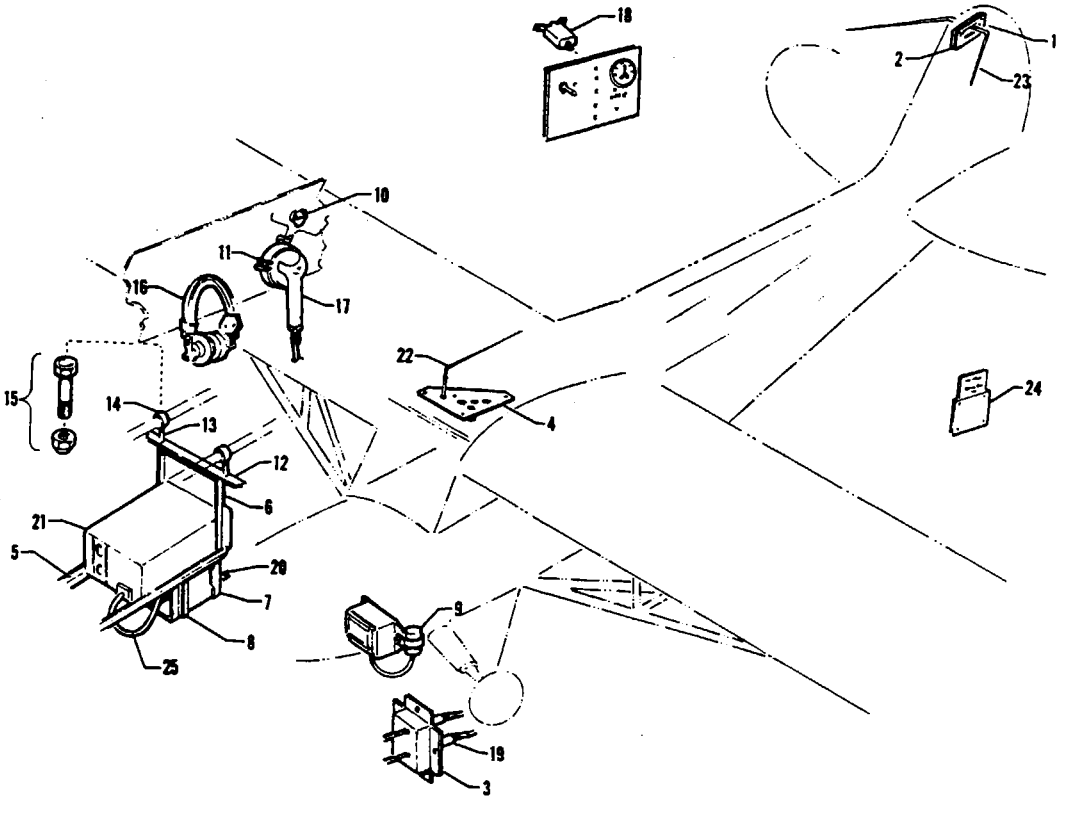

Figure 54. Radio Installation, PTR-1

Figure and Index Number	Part Number	Code	NOMENCLATURE	No. Req.	SERIAL NUMBERS AFFECTED
54-	15257		DRAWING - Radio Installation, PTR-1		
-1	14296-00		PLATE - Trim	2	
-2	14313-00		GROMMET - Trim plate	2	
-3	14311-18		BOX ASSEMBLY - Magneto filter	1	
-4	14573-00		PLATE - Antenna mounting	1	
-5	15264-00		CHANNEL ASSEMBLY - Radio mounting, left	1	
	15264-01		CHANNEL ASSEMBLY - Radio mounting, right	1	
-6	15251-00		PANEL ASSEMBLY - Radio mounting	1	
-7	15253-00		PANEL - Omni mounting	1	
-8	15256-00		STRAP ASSEMBLY - Omni support	1	
-9	19286-00		CAPACITOR ASSEMBLY	1	
-10	23302-00		WASHER - Retaining, microphone holder	1	
-11	23303-00		HOLDER - Microphone (used with Telephonics Mike RS-38A)	1	
	453 415		BRACKET - Microphone (used with Telex Mike 66C)	1	
-12	15265-00		ANGLE - Radio panel mounting	1	
-13	14843-02		BUSHING - Angle mounting	2	
-14	80032-52		CLAMP - Angle mounting	2	
-15	400 453		BOLT - (AN3-21A)	2	
	404 887		NUT - (MS20365-1032C)	2	
-16	464 362		HEADPHONE - (61650-03, 600 ohms)	1	
-17	474 647		MICROPHONE - (Telephonics RS-38A)	1	
	474 649		MICROPHONE - (TEL-66C)	1	
-18	454 657		CIRCUIT BREAKER - (PS50120-3-12)	1	
-19	460 634		FILTER - Magneto (NF1F-247)	2	
-20	551 176		CONVERTER - O-1 Omni (1-940004)	1	
	551 219		CONVERTER - OL-1 Omni (1-940010)	1	
-21	551 174		RADIO - PTR-1, low band	1	
-22	451 272		ANTENNA - Whip (VTP-17)	1	
-23	14580-00		ANTENNA - (VRP-37)	1	
-24	470 645		KIT - Compass deviation card and holder (14364-00)	1	
-25	551 177	A	CABLE ASSEMBLY - PTR-1 to O-1 (1-900002)	1	
	551 222	B	CABLE ASSEMBLY - PTR-1 to OL-1 (1-900009)	1	

A - Used when O-1 Omni Converter is installed.
B - Used when OL-1 Omni Converter is installed.

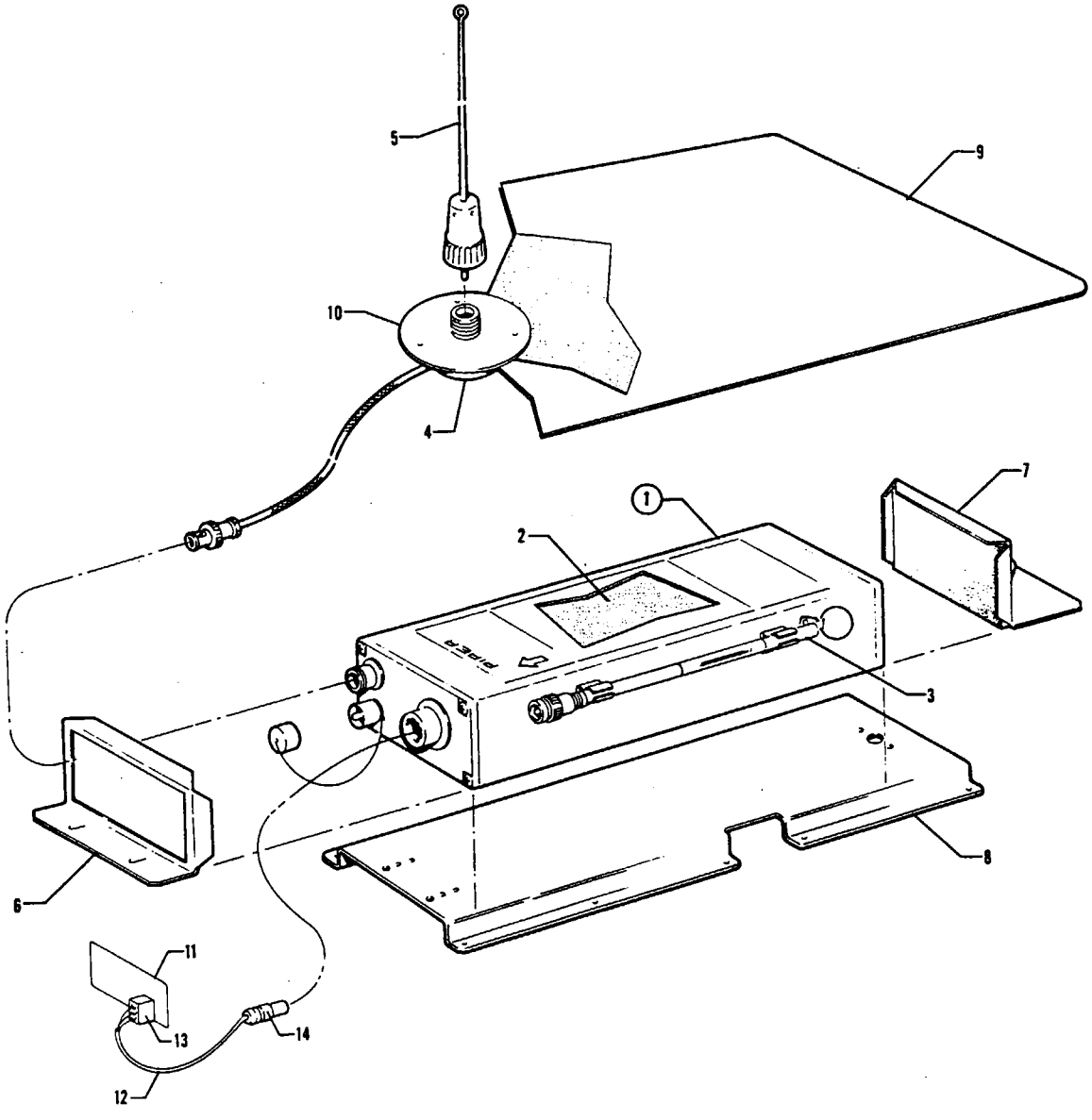

Figure 54A. Piper Automatic Locator (ELT) Installation
(Garrett Mfg. Ltd.)

PIPER PARTS CATALOG

Figure and Index Number	Part Number	Code	NOMENCLATURE	No. Req.	SERIAL NUMBERS AFFECTED
54A-	15315	A	DRAWING - Piper Automatic Locator (ELT) Installation		
	15319	B,C	DRAWING - Piper Automatic Locator (ELT) Installation		
-1	756 398	D	TRANSMITTER ASSEMBLY - Automatic locator (627484-1) (includes magnesium battery pack)	1	
	761 939	D	TRANSMITTER ASSEMBLY - Automatic locator (627674-1) (includes magnesium battery pack)	1	
	761 967	D	TRANSMITTER ASSEMBLY - Automatic locator (627810-1) (includes lithium battery pack)	1	
-2	758 281	A,B	* BATTERY PACK - Transmitter assembly (magnesium)	1	
	758 364	C,D	* BATTERY PACK - Transmitter assembly (lithium)	1	
-3	751 316		* ANTENNA ASSEMBLY - Telescopic	1	
-4	751 318		CABLE AND BASE ASSEMBLY - Whip antenna	1	
-5	751 319		ANTENNA ASSEMBLY - Whip (less cable and base)	1	
-6	758 266		BRACKET - Forward transmitter mounting	1	
-7	758 267		BRACKET ASSEMBLY - Aft transmitter mounting (includes lock knob)	1	
-8	53093-00		BRACKET ASSEMBLY - Emergency locator transmitter	1	
-9	15314-00		PLATE - Antenna ground field	1	
-10	15313-00		DISC - Antenna mounting	1	
-11	33543-00	B	PLACARD - Warning (ELT)	1	
	80418-02	C	PLACARD - Warning (ELT)	1	
-12	33506-07	B	HARNESS ASSEMBLY - (Includes ELT switch)	1	
	49101-04	C	HARNESS ASSEMBLY - (Includes ELT switch)	1	
-13	587 951	B	* SWITCH - ELT (7103K)	1	
	587 965	C	* SWITCH - ELT (7101K)	1	
-14	555 731	B,C	* CONNECTOR - (612129-3)	1	

A - Used with Transmitter Assembly part number 756 398 (Model 627484-1).
B - Used with Transmitter Assembly part number 761 939 (Model 627674-1).
C - Used on Transmitter Assembly part number 761 967 (Model 627810-1).
D - No longer available. Order ELT Replacement Kit 764 082 (Garrett ELT to Narco ELT 10) as a replacement.

When ordering, always specify Part Number, Description and Serial Number of Aircraft

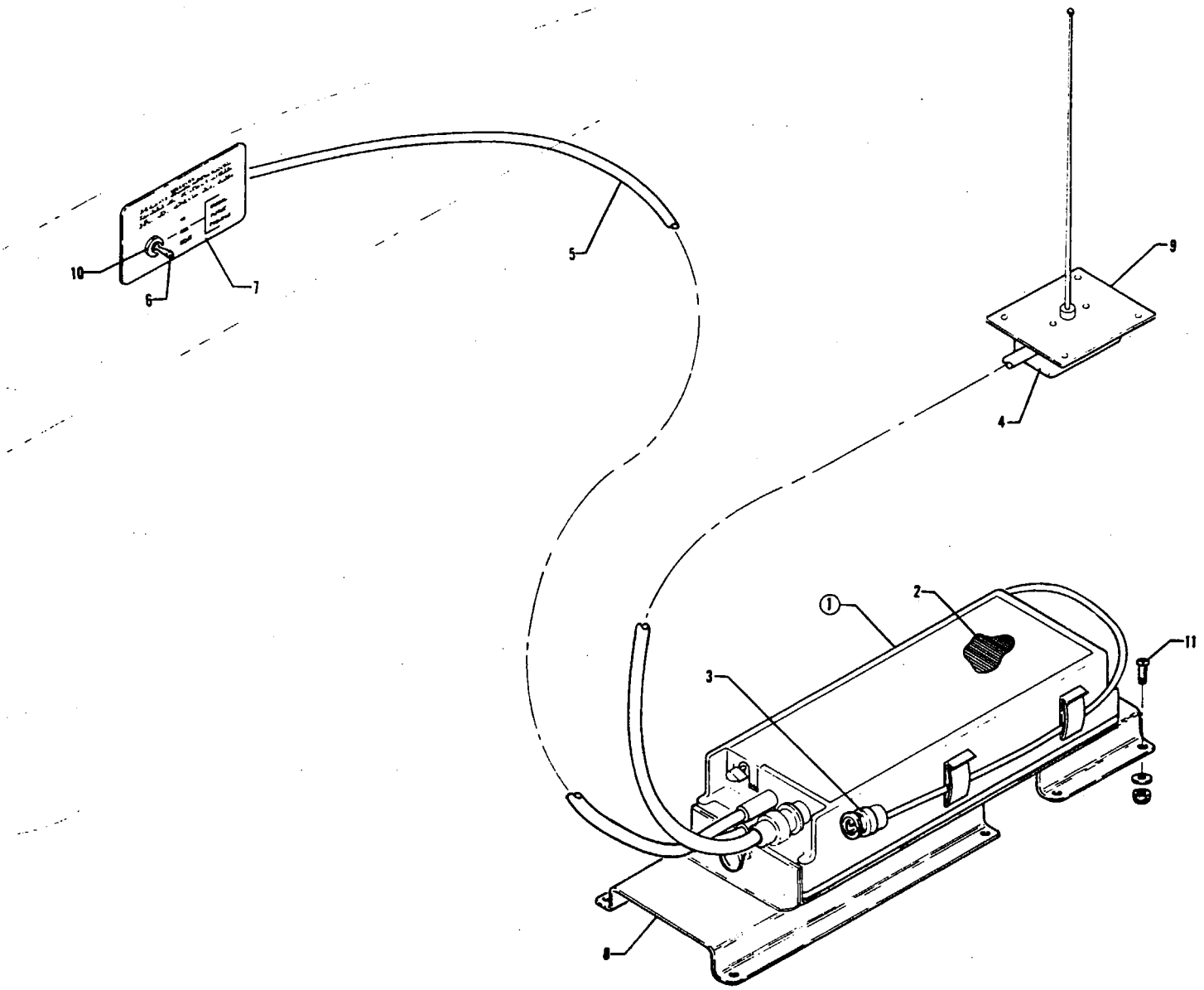

Figure 54B. Piper Automatic Locator (ELT) Installation
(Communications Components Corp.)

PIPER PARTS CATALOG

Figure and Index Number	Part Number	Code	NOMENCLATURE	No. Req.	SERIAL NUMBERS AFFECTED
54B-	15929		DRAWING - Piper Automatic Locator (ELT) Installation		
-1	762 030	V	TRANSMITTER ASSEMBLY - Automatic locator (CIR-11-2) (includes alkaline battery pack)	1	
-2	758 528	V	* BATTERY PACK - Transmitter assembly (alkaline)	1	
-3	758 092	V	* ANTENNA ASSEMBLY - Portable (10-249)	1	
-4	763 004	V	ANTENNA ASSEMBLY - Whip (10-234)	1	
-5	60705-02		SWITCH AND HARNESS ASSEMBLY - ELT	1	
-6	588 043		* SWITCH - (7207)	1	
-7	80529-02		PLACARD - Warning ELT	1	
-8	53093-04		BRACKET ASSEMBLY - ELT	1	
-9	60704-02		PLATE - Ground	1	
-10	477 829		NUT - ELT switch	1	
-11	415 521		SCREW - (MS35206-231)	8	
	407 562		WASHER - (AN960-6)	8	
	404 909		NUT - (MS20365-632C)	8	

V - These parts must be ordered from Service Spares Department, Piper Aircraft Corporation, Vero Beach, Florida.

When ordering, always specify Part Number, Description and Serial Number of Aircraft

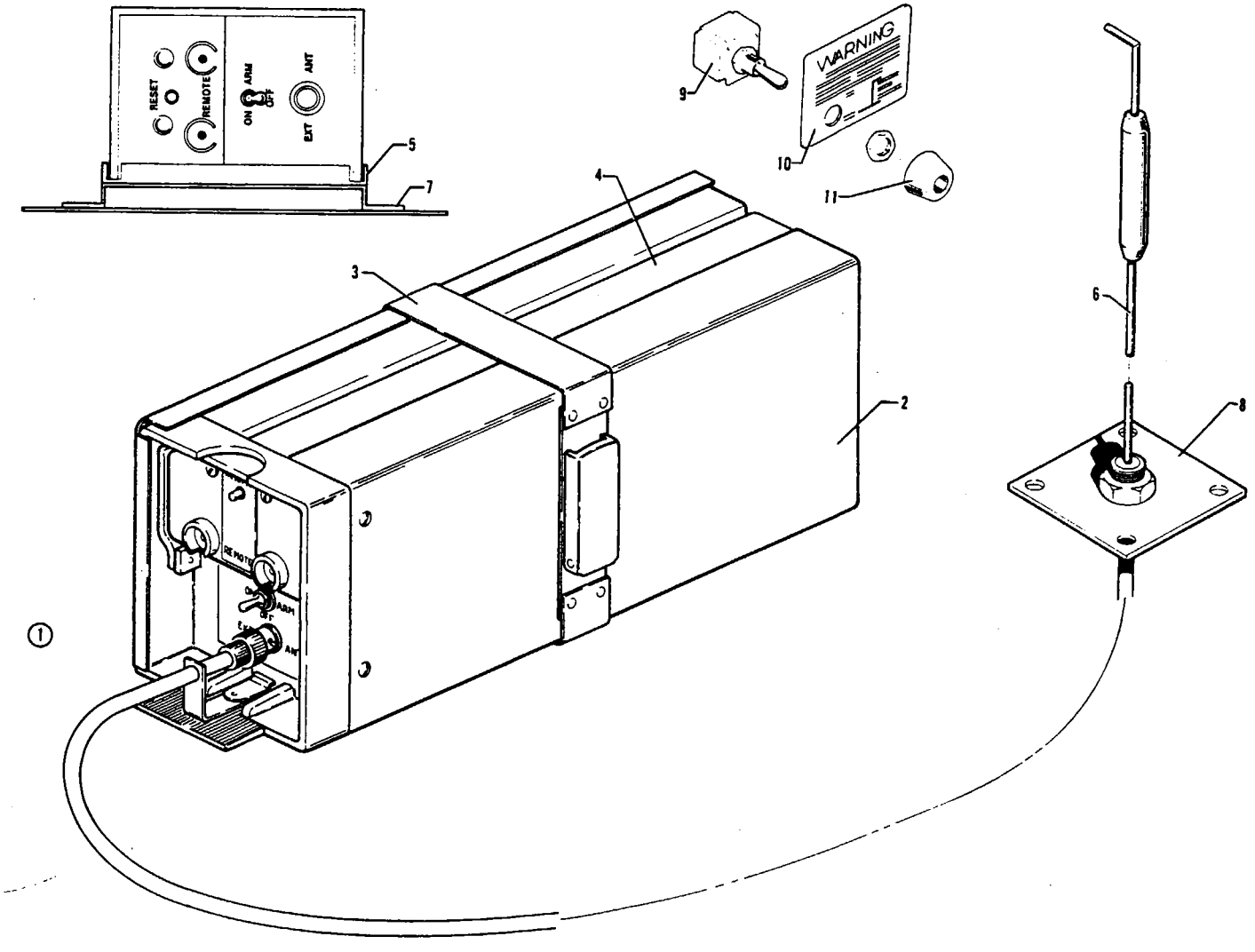

Figure 54C. Piper Automatic Locator (ELT) Installation
(Narco Avionics)

PIPER PARTS CATALOG

Figure and Index Number	Part Number	Code	NOMENCLATURE	No. Req.	SERIAL NUMBERS AFFECTED
54C-	66081		DRAWING - Piper Automatic Locator (ELT) Installation		
-1	54800-54		TRANSMITTER ASSEMBLY - Automatic locator (ELT 10) (includes alkaline battery pack)	1	
-2	758 452		* * BATTERY PACK - Transmitter assembly (57674-00)	1	
-3	762 357		* * STRAP - Transmitter assembly (57682-0101)	1	
-4	763 019		* * ANTENNA - Blade, portable (57667-0001)	1	
-5	758 453		* * BASE - Transmitter assembly (57666-0001)	1	
-6	597 257		ANTENNA ASSEMBLY - E.L.T. (01652-0101)	1	
-7	39273-03		BRACKET ASSEMBLY - E.L.T. mounting	1	
-8	60704-02		PLATE - Ground	1	
-9	587 965		SWITCH - (7101-K)	1	
-10	80687-02		PLACARD - Warning, E.L.T.	1	
-11	477 829		NUT - Dress (8025)	1	

When ordering, always specify Part Number, Description and Serial Number of Aircraft

PIPER PARTS CATALOG

Figure and Index Number	Part Number	Code	NOMENCLATURE	No. Req.	SERIAL NUMBERS AFFECTED
	752 263	A	AUXILIARY FUEL TANK INSTALLATION - “125”		
	752 179		AUXILIARY FUEL TANK INSTALLATION - “95”		(PA-18 only) 18-1 to 18-3013
	754 039		AUXILIARY FUEL TANK INSTALLATION - “95”		(PA-18 only) 18-3014 and up
	752 181		AUXILIARY FUEL TANK INSTALLATION - “105” & “125”		(PA-18 only) 18-1 to 18-1969
	754 223	E	CARBURETOR AIR FILTER - “150”		18-3771 to 18-6964 inclusive
	752 246		CARGO COMPARTMENT INSTALLATION - (Used on airplanes with single control)		(PA-18A only) 18-1215 and up
	754 014		COLD AIR VENT - (Top fuselage cowl) “105”, “125”. “135” and “150”		
	752 293		COMBINATION UNIT - Sprayer (gear pump) duster and tank		PA-18A only) 18-1215 to 18-3013
	754 005		COMBINATION UNIT - 1" Pump (high density) sprayer, duster and tank		(PA-18A only) 18-1215 to 18-3770, 18-3772 to 18-3785 inclusive
	754 006		COMBINATION UNIT - 3/4" Pump sprayer, duster and tank		(PA-18A only) 18-1215 to 18-3013
	754 022	B	COMBINATION UNIT - Sprayer (low density) duster and tank		
	754 067		COMBINATION UNIT - Sprayer (hi-density) duster and tank		(PA-18A only) 18-3771, 18-3786 to 18-5294 inclusive
	754 064		COMBINATION UNIT - Sprayer (low density) duster and tank		(PA-18A only) 18-3771,18-3786 to 18-5294 inclusive
	754 153		COMBINATION UNIT - Sprayer 1" pump(low density) duster and tank		(PA-18A only) 18-5295 and up
	754 154		COMBINATION UNIT - Sprayer 1" pump (hi-density) duster and tank		(PA-18A only) 18-5295 and up
	752 278		CONTROL STICK LOCK - (When radio installed)		
	752 279		CONTROL STICK LOCK - (When radio not installed)		
	754 032	C	DUMP VALVE INSTALLATION		(PA-18A only) 18-1215 and up
	752 282	D	DUSTER EQUIPMENT INSTALLATION - (With tank)		
	752 295		DUSTER CONVERSION INSTALLATION - (Gear pump sprayer to duster)		PA-18A only) 18-1215 to 18-3013
	754 010	D	DUSTER CONVERSION INSTALLATION - (1" pump sprayer (hi density to duster)		
	754 011		DUSTER CONVERSION INSTALLATION - (3/4" pump sprayer to duster)		PA-18A only) 18-1215 to 18-3013
	754 040		DUSTER VENTURI CONVERSION - (For airplanes presently equipped with old type venturi)		PA-18A only) 18-3014 and up
	754 147		DUSTER EQUIPMENT INSTALLATION - With tank		PA-18A only) 18-5295 and up
	754 148		DUSTER CONVERSION INSTALLATION - 1" pump sprayer to duster		PA-18A only) 18-5295 and up
	763 826	F	POWER RELAY REPLACEMENT KIT		18-7409140 to 18-7809053 inc.
	763 827	F	OVER VOLTAGE RELAY REPLACEMENT KIT		18-7409140 to 18-7809053 inc.

A - Used on PA-18A airplanes with serial numbers 18-1215 to 18-1969 inclusive.
B - Used on PA-18A airplanes with serial numbers 18-3014 to 18-3770 inclusive, 18-3772 to 18-3785 inclusive.
C - For use on airplanes where bottom hopper plates are attached with rods.
D - Used on PA-18A airplanes with serial numbers 18-1215 to 18-5294 inclusive.
E - See latest revision of Piper Service Letter 318.
F - See latest revision of Piper Service Letter 828. PA18-150’s with alternator installation only.

PIPER PARTS CATALOG

Figure and Index Number	Part Number	Code	NOMENCLATURE	No. Req.	SERIAL NUMBERS AFFECTED
	752 190		ELECTRICAL EQUIPMENT - Power supply “95”		18-1 to 18-664 inclusive
	752 219		ELECTRICAL EQUIPMENT - Power supply “95”		18-665 to 18-1214 inclusive
	752 189		ELECTRICAL EQUIPMENT - Power supply, “105” and “125”		18-1 to 18-664 inclusive
	752 217		ELECTRICAL EQUIPMENT - Power supply “125”		18-665 to 18-1214 inclusive
	752 239		ELECTRICAL EQUIPMENT - Power supply “125” and “135” (sealed battery box)		(PA-18 only) 18-1215 to 18-3013
	752 238	A	ELECTRICAL EQUIPMENT - Power supply		
	754 028		ELECTRICAL EQUIPMENT - Power supply, “135” and ‘&150”		(PA-18 only) 18-3014 and up
	754 029		ELECTRICAL EQUIPMENT - Power supply, “135” and “150”		(PA-18A only) 18-3014 and up
	754 030		ELECTRICAL EQUIPMENT - Power supply, “95”(sealed battery box) (PA-18 only)		18-1215 to 18-3013
	754 031		ELECTRICAL EQUIPMENT - Power supply, “95”		(PA-18 only) 18-3014 and up
	754 002	A	HANDLE AND CATCH INSTALLATION - Hopper door		
	752 294		HOPPER INSTALLATION - (Tank only)		(PA-18A only) 18-1215 and up
	754 033		HOPPER INDICATOR INSTALLATION - (Duster) (For airplanes when screw type stop lever is installed)		(PA-18A only) 18-3014 and up
	752 298		INSTRUMENT INSTALLATION - (Directional gyro only) (Venturi system)		(PA-18 only) 18-1 to 18-468
	752 299		INSTRUMENT INSTALLATION - (Primary group)(Venturi system)		(PA-18 only) 18-1 to 18-468
	752 196		LANDING GEAR AND TAIL WHEEL - Nut and bolt		
	752 176	B	LANDING LIGHT - ”105”, “125” and “135”		18-1 to 18-3770 inclusive, 18-3772 to 18-3780 inclusive
	754 053	C,G	LANDING LIGHT INSTALLATION - “135” and “150”		
	752 215		LITTER INSTALLATION		(PA-18 only) 18-1 and up
	752 193		NAVIGATION LIGHT AND COCKPIT SPOTLIGHT		
	752 206		NUTS AND BOLTS - Wing and lift strut installation		
	752 241	D	OIL RADIATOR INSTALLATION - ”135”		
	752 200		PARKING BRAKE INSTALLATION		
	754 000	E	PUMP INSTALLATION - 1” Centrifugal (high density)		
	754 001	E	PUMP INSTALLATION - 3/4” Centrifugal		
	752 283		RADIO INSTALLATION - (NARCO VTLR-2)		
	752 233	F	REAR SEAT AND DUAL CONTROL INSTALLATION - “125”		
	752 250		REAR SEAT AND DUAL CONTROL INSTALLATION - “125” and “150””		(PA-18A only)
	752 249		REAR SEAT INSTALLATION - (Less controls)		(PA-18A only)
	750 454		RIB REPAIR		
	754 092	H	REINFORCEMENT KIT - Tail		(PA-18A only) 18-4123 and up

A - Used on PA-18A airplanes with serial numbers 18-1215 to 18-3013 inclusive.
B - Used on PA-18, Model “95” airplanes with serial numbers 18-1 and up.
C - Used on airplanes with serial numbers 18-3771, 18-3781 and up.
D - This kit is used for installing large 12 plate oil radiator in PA-18 and PA-18A Model “125” airplanes.
E - These are conversion kits for use on aircraft equipped with gear pump.
F - Used on PA-18A airplanes with serial numbers 18-1215 to 18-1969 inclusive.
G - Used on aircraft with Generator Powered Electrical System only.
H - See latest revision of Piper Service Letter 247.

When ordering, always specify Part Number, Description, and Serial Number of Aircraft

PIPER PARTS CATALOG

Figure and Index Number	Part Number	Code	NOMENCLATURE	No. Req.	SERIAL NUMBERS AFFECTED
	752 192		SAFE FLIGHT INDICATOR - (When electrical equipment is installed)		
	752 191		SAFE FLIGHT INDICATOR - (When electrical equipment is not installed)		
	750 738		SPAR SPLICE - Front (wing)		
	750 737		SPAR SPLICE - Rear (wing)		
	754 072	C	SPECIAL CARBURETOR AIR BOX INSTALLATION - ”135”		(PA-18A only) 18-3014 to 18-3785
	754 073	C	SPECIAL CARBURETOR AIR BOX INSTALLATION - ”135”		(PA-18A only) 18-1 to 18-3013
	754 071	C	SPECIAL CARBURETOR AIR BOX INSTALLATION - ”150”		(PA-18A only) 18-3786 and up
	752 296		SPRAYER CONVERSION INSTALLATION - (Duster to gear pump sprayer)		(PA-18A only) 18-1215 to 18-3013
	754 012		SPRAYER CONVERSION INSTALLATION - (Duster to 1" pump (hi-density) (sprayer)		(PA-18A only) 18-1215 to 18-3770, 18-3772 to 18-3785 inclusive
	754 013		SPRAYER CONVERSION INSTALLATION - (Duster to 3/4" pump sprayer)		(PA-18A only) 18-1215 to 18-3013
	754 023	B	SPRAYER CONVERSION INSTALLATION - (Duster to 1" pump) (low density) sprayer		
	754 024		SPRAYER CONVERSION INSTALLATION - Low density to hi density		(PA-18A only) 18-3014 and up
	754 065		SPRAYER CONVERSION INSTALLATION - Duster to sprayer (Hi density)		(PA-18A only) 18-3771 and 18-3786 to 18-5294 inclusive
	754 066		SPRAYER CONVERSION INSTALLATION - Duster to sprayer (Low density)		(PA-18A only) 18-3771 and 18-3786 to 18-5294 inclusive
	754 151		SPRAYER CONVERSION INSTALLATION - Duster to 1" pump (hi-Density) sprayer		(PA-18A only) 18-5295 and up
	754 152		SPRAYER CONVERSION INSTALLATION - Duster to 1" pump (Low Density) sprayer		(PA-18A only) 18-5295 and up
	752 281		SPRAYER EQUIPMENT INSTALLATION - Gear pump with tank		(PA-18A only) 18-1215 to 18-3013
	754 008		SPRAYER EQUIPMENT INSTALLATION - 1 “ pump (high density) with tank		(PA-18A only) 18-1215 to 18-3770, 18-3772 to 18-3785 inclusive
	754 009		SPRAYER EQUIPMENT INSTALLATION - 3/4” pump with tank		(PA-18A only) 18-1215 to 18-3013
	754 021	B	SPRAYER EQUIPMENT INSTALLATION - 1" pump (low density) with tank		
	754 063	A	SPRAYER EQUIPMENT INSTALLATION - (Hi-density) with tank		
	754 084	A	SPRAYER EQUIPMENT INSTALLATION - (Low density)with tank		
	754 149		SPRAYER EQUIPMENT INSTALLATION - (Hi-density) (1" pumps with tank		(PA-18A only) 18-5295 and up
	754 150		SPRAYER EQUIPMENT INSTALLATION - (Low density) (1" pump) with tank		(PA-18A only) 18-5295 and up

A - Used on PA-18A airplanes with serial numbers 18-3771, 18-3786 to 18-5294 inclusive.
B - Used on PA-18A airplanes with serial numbers 18-3014 to 18-3770 inclusive, 18-3772 to 18-3785 inclusive.
C - See latest revision of Piper Service Letter 242A on PA-18A “135”.

PIPER PARTS CATALOG

Figure and Index Number	Part Number	Code	NOMENCLATURE	No. Req.	SERIAL NUMBERS AFFECTED
	752 277		TANDEM WHEEL INSTALLATION		
	752 274		TAIL WHEEL INSTALLATION - (8" Scott No. 3200 tail wheel)		
	754 018		VACUUM PUMP INSTALLATION - (Old accessory case) "135"		18-2684 to 18-3460 inclusive
	754 060		VACUUM PUMP INSTALLATION - (New accessory case) "135" and "150"		18-3461 to 18-8019 inclusive
	754 351		OIL FILTER INSTALLATION KIT - PA-18A-150, PA-18-150		
	754 350		OIL FILTER INSTALLATION KIT - PA-18A-125		
	754 349		OIL FILTER INSTALLATION KIT - PA-18-95		
	550 759		PIPER MIXTURE CONTROL INDICATOR KIT		
	474 656		MICROPHONE - (Shure CM-16TF)		
	761 081		CLEVELAND BRAKE AND WHEEL CONVERSION KIT - Wheel and brake assembly #20-119 (Less tires and tubes)		18-3771, 18-3781 to 18-7609136 inclusive
	470 989	A	KIT - Tow Hook Installation		
	764 082		ELT REPLACEMENT - (Garrett ELT to Narco ELT 10)		
	767 390		ELECTRICAL CONTACTOR REPLACEMENT KIT INSTRUCTIONS		
	767 393		ELECTRICAL CONTACTOR KIT		
	767 396		ELECTRICAL CONTACTOR KIT		
	753 910	B	VACUUM PUMP COUPLING KIT		
	752 226	C	AUXILIARY OIL RADIATOR KIT		
	752 236	D	FLAP CABLE CONTROL KIT		
	754 015	E	REINFORCEMENT KIT		

A - Used on PA-18-150 and PA-l8A-150 aircraft only.
B - See latest revision of Piper Service Bulletin 1026 for serial numbers 18-8020 to 18-9004, 18-7309016 to 18-8309025.
C - See latest revision of Piper Service Letter 178.
D - See latest revision of Piper Service Letter 188.
E - On all PA-18's up to serial number 18-2927. See latest revision of Piper Service Letter 210.

When ordering, always specify Part Number, Description, and Serial Number of Aircraft

NUMERICAL INDEX

Part Number	Figure and Index No.
00031-24	2-57
10016-17	2-26
10016-20	2-25
10016-21	2-25
10032-05	24-34
10032-06	24-34
10032-07	24-34
10032-08	24-34
10033-05	24-35
10033-06	24-35
10034-00	24-37
10049-02	9-10
10058-00	10-54
10061-00	10-46
10080-00	47-7
10096-03	7-16
10098-03	7-13
10112-07	5-34
10112-07	6-34
10128-27	36-41
10128-28	36-42
10128-72	49-6
10128-78	36-17
10128-83	37-20
10128-93	40-14
10134-00	10-7
10143-18	35-71
10143-20	35-28
10143-52	35-14
10143-61	35-27
10143-63	35-21
10143-91	35-73
10143-95	35-74
10143-97	35-21
10151-00	5-53
10151-00	6-53
10161-04	5-19
10161-04	5-25
10161-04	6-19
10161-04	6-25
10161-05	5-32
10161-05	6-32
10171-04	5-11
10171-04	5-14
10171-04	6-11
10171-04	6-14
10171-05	5-38
10171-05	6-38
10175-00	34-11
10201-00	5-16
10201-00	5-21
10201-00	5-27
10201-00	5-30
10201-00	5-40
10201-00	6-16
10201-00	6-21
10201-00	6-27
10201-00	6-30
10201-00	6-40
10221-00	5-15
10221-00	5-20
10221-00	5-26
10221-00	5-31
10221-00	5-39
10221-00	6-15
10221-00	6-20
10221-00	6-26
10221-00	6-31
10221-00	6-39
10246-00	31-1
10247-00	31-2
10280-00	4-45
10291-00	4-32
10292-00	8-29
10293-00	8-30
10300-02	10-65
10400-06	33-14
10401-00	4-13
10415-02	34-25
10415-03	34-26
10438-00	36-9
10438-00	36-19
10438-02	38-9
10443-00	36-25
10443-00	38-11
10449-00	48-24
10466-08	22A-5
10466-09	10-6
10466-13	35-8
10466-21	29-15
10466-27	17-21
10466-28	48-7
10466-33	29-16
10474-00	4-46
10487-00	34-20
10516-00	30-
2910525-03	29-22
10525-05	29-20
10525-06	30-17
10525-14	29-90
10525-14	34A-8
10525-15	29-20
10525-17	30-17
10525-18	29-20
10525-18	29-22
10525-19	29-91
10525-22	34A-9
10525-32	29-18
10525-51	34-32
10525-51	40B-11
10531-00	5-51
10531-01	5-51
10531-04	5-51
10531-04	6-51
10531-05	5-51
10531-05	6-51
10536-02	24-13
10537-02	24-16
10545-00	8-54
10552-00	7-10
10552-01	7-10
10554-00	13-20
10555-02	23-1
10556-02	23-16
10565-00	10-29
10566-00	24-38
10566-05	24-38
10567-00	24-41
10624-02	2-7
10624-03	2-7
10624-05	2-7
10624-06	2-7
10625-03	4-1
10625-04	4-1
10625-05	4-1
10625-06	4-1
10630-00	4-2
10630-05	4-2
10630-08	4-2
10630-09	4-2
10630-11	4-2
10631-00	4-3
10631-01	4-3
10633-00	5-86
10633-05	5-86
10634-04	5-76
10634-05	5-57
10634-05	6-56
10634-07	5-57
10634-07	6-56
10634-08	5-76
10635-00	5-77
10635-02	5-58
10635-02	6-57
10641-00	4-19
10641-02	4-19
10644-00	5-49
10644-00	6-49
10648-03	4-16
10649-03	4-18
10650-02	4-17
10653-00	5-78
10653-02	5-59
10653-02	6-58
10653-05	5-59
10653-05	6-58
10653-06	5-78
10654-02	7-5
10656-00	7-6
10657-05	2-23
10666-03	13-7
10666-06	13-7
10668-00	9-17
10703-00	4-38
10703-03	4-28
10703-04	4-27
10705-00	5-12
10705-00	6-12
10706-00	5-23
10706-00	6-23
10707-00	5-28
10707-00	6-28
10709-00	5-36
10709-00	6-36
10711-00	5-17
10711-00	6-17
10729-00	35-48
10729-03	35-47
10734-00	28-25
10734-01	28-25
10737-02	12-4
10742-02	5-65
10742-02	6-67
10742-03	5-65
10742-03	6-67
10748-00	24-37a
10763-10	11-21
10763-16	11-21
10763-22	11-21
10763-28	11-21

Part Number	Figure and Index No.
10763-40	11-21
10763-46	11-21
10764-00	30-15
10776-02	8-60
10780-00	13-5
10789-02	8-15
10789-03	8-15
10793-00	8-19
10794-00	8-18
10796-00	8-17
10797-00	8-16
10799-00	12-3
10799-02	12-3
10802-00	33-11
10802-05	33-11
10808-02	33-5
10808-03	33-5
10809-08	33-8
10809-10	33-8
10810-07	33-2
10810-08	33-1
10810-15	33-2
10810-16	33-1
10810-25	33-2
10810-26	33-1
10810-29	33-2
10810-30	33-1
10814-04	33-16
10814-05	33-18
10815-04	33-26
10815-05	33-20
10815-06	33-29
10815-07	33-23
10816-00	32-30
10816-00	33-22
10816-00	33-25
10816-00	33-28
10816-00	33-31
10817-02	30-54
10817-03	30-54
10818-00	10-22
10824-00	49-21
10824-00	50-16
10824-00	51-20
10824-00	53-16
10830-00	34-4
10830-05	34-1
10832-00	34-2
10834-00	2-46
10835-00	34-3
10836-02	29-8
10836-02	34A-12
10837-00	2-40
10843-00	30-15
10845-00	30-14
10846-00	30-14
10847-00	2-44
10849-00	2-32
10849-25	2-32
10849-32	2-32
10849-34	40A-1
10849-43	40A-1
10852-00	2-41
10853-00	2-42
10865-00	44-1
10865-05	44-1
10870-07	42-7
10870-08	42-4
10870-16	42-6
10870-17	42-4
10907-00	5-78
10907-02	5-59
10908-03	5-76
10908-04	5-57
10920-00	34-27
10921-00	4-29
10921-00	4-39
10921-02	4-29
10921-02	4-39
10922-00	34-19
10923-00	34-18
10930-00	9-21
10933-00	8-21
10933-01	8-21
10934-00	8-22
10936-00	47-5
10940-00	45-7
10940-00	45-9
10940-02	48-23
10940-02	48-25
10984-00	8-28
11008-00	48-12
11015-00	14-3
11015-00	15-24
11015-00	16-11
11015-00	16A-2
11034-00	2-24
11061-00	5-50
11061-00	6-50
11122-02	38-6
11134-00	36-4
11134-04	36-4
11134-05	36-2
11134-07	36-2
11134-07	38-1
11134-08	38-5
11151-02	5-73
11151-02	6-74
11199-00	14-5
11199-00	16A-31
11199-08	14-5
11199-08	16A-3
11200-00	42-15
11207-03	10-49
11253-00	2-58
11278-00	34-14
11279-00	34-12
11279-02	34-13
11279-03	34-12
11279-04	34-13
11280-00	34-31
11280-00	40B-10
11282-00	34-6
11283-00	34-5
11299-02	35-16
11299-04	9-53
11299-06	35-17
11300-00	35-5
11300-03	35-4
11301-00	35-6
11329-00	34-28
11339-03	15-28
11339-06	14-8
11383-03	35-55
11408-12	10-55
11408-13	10-57
11408-14	10-56
11420-03	11-39
11420-03	11-42
11420-03	11-48
11432-09	8-52
11432-10	8-50
11432-11	8-48
11473-02	8-41
11473-32	8-42
11473-35	49-17
11473-35	50-8
11473-35	51-13
11473-35	53-18
11473-41	21-6
11473-47	3-12
11491-00	34-9
11523-00	2-3
11546-02	10-67
11580-00	5-48
11580-00	6-48
11648-02	8-49a
11648-02	8-51a
11670-02	5-2
11670-03	5-2
11670-04	6-2
11670-05	6-2
11672-00	4-24
11675-02	4-25
11675-03	4-26
11677-00	4-21
11678-00	4-31
11682-00	2-14
11682-00	6A-7
11692-00	10-28
11692-02	10-15
11692-02	10-42
11692-05	48-34
11694-02	45-6
11694-02	45-8
11694-03	45-8
11694-04	45-6
11694-04	45-8
11694-05	45-8
11699-06	11-30
11700-00	11-31
11718-00	36-7
11719-00	2-6
11719-01	2-6
11723-00	11-33
11797-05	34-8
11797-06	34-8
11797-09	34-8
11821-00	10-25
11821-01	10-25
11829-03	10-27
11950-04	29-4
11950-04	30-5
11950-05	29-2
11950-07	29-5
11951-07	34-10
11957-00	29-41
11973-05	35-3
11973-07	35-3
11987-03	21-15
11987-05	35-15
11987-09	35-26
11987-13	35-2
11987-15	16-7
11987-15	35-13
11987-17	35-1
11987-23	35-15
11987-25	2-49
11987-25	15-5
11987-37	35-2
11987-39	35-1
11987-43	15-9
11987-45	19-34
11987-47	21-20
11987-49	21-2
11987-55	35-69
11987-57	19-34
11987-57	35-70
11987-61	35-72
11994-22	8-71
12021-00	37-23
12021-02	12-14
12028-00	4-30
12036-02	9-20
12036-03	9-19
12044-08	36-13
12045-00	36-11
12079-00	11-24
12105-00	47-8
12156-00	37-11
12176-00	49-16
12176-00	50-7
12176-00	51-12
12177-17	36-43
12177-17	38-3
12177-22	37-21

Part Number	Figure and Index No.
12177-26	36-28
12177-28	36-29
12177-29	36-1
12177-32	36-16
12177-33	40-6
12177-39	23-45
12177-40	36-1
12177-61	37-19
12177-66	37-16
12177-67	37-15
12177-68	37-13
12177-69	37-14
12177-71	36-18
12177-73	37-18
12177-74	37-17
12177-75	49-8
12177-87	36-1
12177-88	36-1
12177-88	38-2
12178-02	10-21
12178-03	10-20
12179-00	10-4
12180-00	10-48
12184-02	10-30
12184-03	10-30
12193-08	8-46
12193-09	8-47
12193-10	8-45
12200-00	10-62
12202-00	10-62
12203-00	10-66
12205-02	10-58
12205-03	10-61
12205-04	10-60
12205-05	10-59
12205-06	10-45
12206-00	10-47
12209-00	30-42
12213-00	29-81
12213-00	30-51
12226-00	30-20
12229-00	34-9
12230-00	30-36
12232-00	30-18
12233-00	30-19
12241-00	42-12
12244-00	11-40
12244-06	11-40
12248-00	8-74
12249-00	8-72
12249-02	8-72
12252-02	5-5
12252-02	5-81
12252-02	6-5
12252-03	5-82
12252-03	5-83
12252-03	5-6
12252-03	6-6
12252-04	5-56
12252-04	5-82
12252-05	5-55
12252-05	6-55
12252-06	5-7
12252-06	5-85
12252-06	6-7
12252-08	5-84
12253-00	8-73
12254-00	8-49
12254-03	8-49b
12255-00	8-51
12256-00	9-8
12256-10	9-8
12256-11	9-8
12257-00	9-2
12257-12	9-2
12259-00	8-53
12260-00	8-67
12261-00	8-67
12264-00	8-68
12264-01	8-68
12265-00	9-18
12266-03	9-16
12267-15	11-36
12268-00	11-23
12268-11	11-23
12268-18	11-23
12269-00	11-25
12273-00	36-38
12274-00	2-4
12274-02	2-4
12275-00	2-5
12275-01	2-5
12276-00	2-1
12276-01	2-1
12279-00	9-11
12280-00	36-11
12284-00	9-51
12284-02	9-51
12286-00	11-15
12286-00	11-45
12287-00	11-16
12289-00	11-22
12289-07	11-22
12289-09	11-22
12289-13	11-22
12289-15	11-22
12289-19	11-22
12289-21	11-22
12289-23	11-22
12289-33	11-22
12289-37	11-22
12289-39	11-22
12290-00	11-13
12293-12	11-19
12293-19	11 19
12293-22	11-19
12293-28	11-19
12293-42	11-19
12293-48	11-19
12294-00	11-18
12294-08	11-18
12294-12	11-18
12294-16	11-18
12294-24	11-18
12294-28	11-18
12298-00	36-3
12298-00	38-4
12298-06	36-23
12298-07	40-3
12298-08	36-3
12298-11	36-23
12298-12	40-3
12298-16	36-3
12299-02	36-24
12307-00	13-17
12308-03	8-61
12308-05	8-61
12309-00	8-65
12309-04	8-65
12311-00	9-22
12314-00	8-62
12314-04	8-62
12315-00	30-32
12319-00	34-7
12319-06	34-7
12320-00	30-33
12330-02	31-3
12330-04	31-3
12331-02	5-74
12331-02	6-75
12345-04	7-11
12350-00	29-87
12351-11	29-72
12351-15	29-72
12353-00	29-45
12355-00	32-25
12355-04	32-25
12356-00	32-1
12356-03	32-1
12356-05	34A-3
12357-00	32-12
12357-03	32-12
12358-00	32-7
12358-01	32-7
12360-00	32-9
12362-00	32-5
12362-03	32-5
12364-00	32-28
12364-01	32-28
12364-03	32-31
12364-05	32-31
12367-00	34-7
12367-06	34-7
12368-00	34-8
12368-05	34-8
12372-00	30-12
12374-00	32-22
12377-00	8-9
12378-00	8-10
12379-00	8-8
12379-02	8-7
12381-00	8-6
12381-02	8-6
12381-03	8-6
12400-00	13-28
12403-02	41-3
12403-03	41-6
12405-00	33-4a
12407-00	29-85
12408-00	29-84
12409-00	29-80
12409-00	30-50
12410-00	29-79
12410-00	30-49
12411-02	29-78
12411-02	30-48
12414-00	29-42
12416-00	31-1
12424-00	34-1
12425-00	34-2
12426-00	34-3
12427-00	34-4
12428-00	34-6
12428-04	34-6
12430-00	8-74
12433-14	29-29
12436-00	29-30
12436-10	29-30
12436-13	34A-4
12437-00	29-28
12440-00	29-46
12444-00	8-63
12445-00	9-23
12446-00	10-63
12446-03	10-63
12446-05	10-63
12446-06	10-63
12446-07	10-63
12448-00	8-44
12448-03	8-44
12448-07	8-44
12457-02	29-23
12457-03	29-24
12457-12	29-25
12457-13	29-26
12516-00	26-1
12516-01	26-1
12524-02	40-9
12524-03	40-7
12524-04	40-8
12525-00	40-4
12527-00	40-11
12527-04	40-11
12529-02	40-12
12529-03	40-10
12532-00	2-54

Part Number	Figure and Index No.
12532-00	40-15
12532-03	2-54
12532-03	40-15
12533-02	40-1
12533-03	40-2
12533-05	40-1
12539-00	29-27
12540-00	32-13
12540-02	32-13
12541-00	32-14
12543-02	32-15
12560-00	39-7
12567-02	27-39
12567-03	27-38
12567-04	27-37
12568-00	26-5
12568-01	26-5
12570-09	2-23
12571-02	7-1
12571-03	7-2
12572-00	26-3
12572-00	26-4
12573-00	23-42
12573-02	23-42
12573-03	23-42
12581-00	5-45
12581-00	6-45
12581-00	18-16
12591-02	7-4
12605-02	20-2
12617-03	8-66
12618-00	9-24
12618-02	9-24
12618-03	9-24
12618-04	9-24
12662-04	5-68
12692-05	2-57
12692-06	2-57
12692-07	2-57
12694-00	13-14
12694-02	13-14
12694-03	13-14
12695-00	46-5
12707-00	32-16
12713-04	4-57
12722-00	13-16
12723-00	32-8
12735-02	8-40
12735-03	8-39
12749-00	34-5
12749-05	34-5
12761-02	3-2
12761-02	8-2
12763-00	8-20
12764-00	35-39
12767-00	10-24
12767-01	10-24
12768-00	2-13
12768-01	2-13
12769-00	23-35
12770-00	23-23
12773-00	2-11
12773-01	2-11
12773-02	2-11
12773-03	2-11
12774-00	11-29
12774-02	11-29
12776-00	11-34
12777-00	10-8
12778-00	4-1
12778-01	4-1
12778-03	4-1
12778-04	4-1
12778-08	4-1
12779-00	2-7
12779-01	2-7
12779-03	2-7
12779-04	2-7
12779-08	2-7
12783-00	5-1
12784-00	5-1
12784-03	5-1
12784-05	5-1
12789-00	23-22
12789-01	23-22
12789-04	23-22
12789-05	23-22
12790-00	23-34
12790-01	23-34
12790-04	23-34
12790-05	23-34
12794-00	45-1
12794-04	45-1
12795-00	2-10
12795-01	2-10
12797-00	29-50
12807-00	36-22
12810-00	12-13
12812-00	36-15
12818-00	8-32
12818-01	8-32
12835-00	10-12
12836-02	35-7
12836-03	35-8
12836-04	35-7
12837-00	35-10
12838-02	35-54
12838-03	35-54
12839-03	11-14
12844-03	24-6
12844-03	24-26
12844-04	24-26
12845-00	24-9
12845-00	24-28
12847-00	4-46
12855-00	9-52
12857-00	35-53
12858-00	37-9
12870-00	35-25
12875-00	24-8
12875-00	24-29
12876-00	15-7
12878-00	49-5
12879-00	49-11
12880-00	49-2
12882-00	49-3
12883-00	49-12
12883-00	50-14
12883-00	51-18
12883-00	52-9
12883-00	53-11
12885-00	49-9
12902-00	5-64
12902-00	6-66
12902-01	5-64
12902-01	6-66
12904-00	26-2
12904-01	26-2
12910-00	37-5
12913-00	37-3
12914-00	11-27
12931-00	7-1
12944-00	28-28
12947-00	50-9
12948-00	50-2
12949-00	50-18
12949-00	51-4
12949-02	52-2
12949-02	53-9
12952-02	51-8
12955-00	13-1
12956-04	29-11
12982-00	48-28
12983-00	47-7
12998-00	24-15
12998-02	24-24
12998-03	24-24
13003-00	29-17
13009-02	40A-2
13010-00	34-15
13022-02	5-62
13022-02	5-63
13022-02	6-65
13022-09	5-62
13022-09	5-63
13022-09	6-64
13022-10	5-62
13022-10	6-62
13022-11	5-62
13022-11	6-63
13029-00	32-7
13029-01	32-7
13042-00	5-80
13042-01	5-80
13042-02	5-61
13042-02	5-62
13042-02	6-61
13042-03	5-61
13042-03	5-62
13042-03	6-61
13051-00	36-7
13051-00	38-10
13052-02	5-77
13052-02	5-79
13052-07	5-58
13052-07	5-60
13052-07	6-59
13052-09	5-61
13052-09	6-60
13052-10	5-61
13052-10	6-60
13072-05	4-5
13072-06	4-5
13091-00	8-55
13093-00	9-16
13094-00	53-17
13099-00	32-22
13129-02	11-7
13129-03	11-6
13129-04	11-7
13129-05	11-6
13160-02	15-7
13160-02	16-23
13160-03	15-7
13160-03	16-23
13160-03	16A-17
13163-00	31-1
13164-00	31-2
13171-00	5-72
13171-00	6-73
13179-00	37-5
13180-00	37-3
13182-00	36-13
13187-00	31-1
13188-00	31-2
13209-00	51-11
13210-02	51-2
13210-03	51-3
13211-00	51-1
13241-00	7-15
13241-00	7-19
13250-00	10-63
13250-02	10-63
13250-03	10-63
13252-00	8-63
13254-00	9-12
13256-00	9-42
13257-00	9-39
13258-00	9-21
13259-02	9-23
13260-00	9-37
13262-00	9-38
13263-00	9-38
13265-00	9-28
13266-00	9-29
13267-00	9-30

Part Number	Figure and Index No.
13268-00	9-31
13269-00	9-32
13270-00	42-6
13271-00	45-1
13271-03	45-1
13274-00	8-61
13280-00	41-8
13283-00	9-50
13283-03	9-50
13284-02	9-59
13284-02	21-44
13284-03	21-37
13284-04	21-36
13284-05	21-42
13292-00	38-12
13295-00	38-16
13297-00	12-2
13297-02	12-1
13297-02	12-2
13298-00	12-15
13300-00	11-8
13301-00	9-40
13301-00	21-54
13305-00	11-9
13307-00	9-44
13308-00	9-43
13308-10	9-43
13309-02	14-1
13325-00	52-7
13326-00	52-5
13326-01	52-5
13330-00	52-3
13330-00	53-3
13330-01	52-4
13330-01	53-4
13334-00	32-23
13364-00	9-52
13367-00	9-53
13368-00	16-1
13368-02	16-1
13373-02	8-69
13373-03	8-70
13373-04	8-70
13378-04	21-50
13416-03	15-29
13427-02	14-1
13428-02	14-1
13433-00	8-72
13433-02	8-72
13437-00	9-55
13437-00	52-14
13437-00	53-5
13453-00	11-46
13454-00	11-44
13455-00	11-43
13467-00	21-41
13471-00	9-50
13471-02	9-50
13471-03	9-50
13483-00	8-76
13495-00	18-10
13497-00	19-23
13497-02	19-23
13500-00	19-84
13500-00	20-19
13501-00	19-85
13501-00	20-20
13503-00	21-30
13504-00	21-31
13508-00	21-33
13509-00	21-34
13514-00	18-9
13515-00	19-42
13517-00	19-9
13517-02	19-10
13518-00	19-4
13518-00	19-6
13520-00	19-66
13520-04	17-14
13521-00	21-43
13524-00	19-47
13529-00	19-3
13530-00	19-70
13534-00	19-38
13539-00	18-8
13540-00	18-3
13541-02	13-22
13541-04	13-23
13541-04	14-12
13541-04	15-23
13541-04	16-24
13541-04	16A-34
13541-16	13-22
13542-02	18-20
13542-03	18-13
13543-00	18-12
13545-00	18-19
13548-00	19-72
13549-00	19-73
13550-00	19-45
13551-00	19-41
13552-00	19-39
13553-00	19-33
13554-02	19-27
13554-03	19-28
13554-04	19-27
13554-05	19-28
13556-00	19-29
13557-00	19-75
13558-00	19-1
13559-00	19-82
13560-00	19-78
13560-04	19-62
13561-02	19-80
13561-03	19-56
13564-02	19-79
13564-03	19-52
13566-02	19-51
13566-03	19-55
13567-00	19-25
13573-00	19-67
13574-00	36-13
13575-00	36-11
13576-00	21-1
13577-00	21-23
13579-00	21-11
13580-02	21-9
13580-03	21-8
13581-00	21-12
13582-00	21-13
13586-02	37-7
13587-00	34-16
13588-00	38-13
13589-00	38-15
13594-00	20-13
13595-00	20-14
13596-00	20-15
13598-00	20-12
13614-00	11-20
13614-02	9-56
13614-03	11-20
13614-06	11-20
13614-07	9-56
13619-00	20-6
13621-02	14-9
13621-02	15-27
13625-00	20-21
13628-00	20-7
13631-00	20-3
13632-00	20-5
13634-00	20-1
13634-02	20-1
13636-00	20-9
13636-02	20-9
13637-00	20-8
13638-00	20-10
13641-02	20-11
13644-00	9-45
13645-00	9-60
13659-00	8-59
13661-00	31-1
13663-00	31-2
13664-00	31-4
13666-00	31-2
13667-00	31-4
13668-00	31-1
13669-00	53-26
13674-00	24-61
13677-00	19-2
13679-00	18-14
13680-00	18-15
13680-02	18-21
13684-00	14-1
13685-02	14-1
13686-02	14-1
13690-00	15-27
13697-02	15-2
13699-02	15-1
13703-00	22-7
13703-21	22-8
13704-00	22-10
13705-00	22-11
13706-00	22-9
13707-00	22-3
13707-01	22-4
13708-00	22-5
13709-02	22-2
13709-03	22-1
13711-00	29-54
13715-00	22-6
13716-00	32-25
13716-02	32-25
13717-00	32-27a
13720-00	29-53
13720-04	29-53
13722-00	29-59
13723-00	29-57
13725-00	29-52
13725-07	29-52
13726-00	29-61
13729-00	41-4
13729-00	41-7
13731-02	41-3
13731-04	41-3
13731-04	41-6
13733-02	41-2
13733-04	41-2
13733-04	41-5
13735-00	41-8
13742-00	41-8
13743-00	12-4
13744-00	34-8
13745-00	42-4
13745-03	42-4
13748-00	21-17
13757-00	21-40
13764-00	21-59
13764-00	13-24
13765-02	29-2
13767-00	19-74
13768-00	32-22
13768-03	32-22
13769-00	32-12
13769-03	32-12
13769-05	32-12
13787-00	18-3
13789-02	18-1
13789-03	18-1
13789-04	18-1
13789-05	18-1
13789-06	18-1
13800-00	15-2
13801-00	15-1
13903-00	8-73c
13914-00	8-73a
13945-23	9-60

Part Number	Figure and Index No.
13948-00	53-6
13949-00	53-2
13963-02	19-73
13963-03	19-72
13963-06	17-38
13963-07	17-37
13965-00	19-77
13966-00	19-63
13967-00	19-71
13967-00	20-17
13988-00	8-58
14054-00	29-63
14055-00	13-6
14056-00	13-4
14059-00	8-11
14060-00	8-12
14061-00	8-14
14064-00	36-13
14065-00	36-11
14066-00	37-32
14069-00	37-34
14070-00	37-35
14072-00	37-28
14073-00	32-34
14075-00	8-13
14088-00	24-19
14088-02	24-19
14092-00	9-46
14093-00	24-20
14094-00	24-21
14097-03	21-51
14098-00	21-53
14099 00	21-52
14100-00	9-42
14101 00	21-48
14104-00	21-45
14106-00	17-29
14107-00	17-30
14108-03	17-35
14108-03	19-64
14109-00	17-27
14109-02	17-27
14110-00	17-28
14112-00	17-24
14113-00	17-23
14114-00	17-26
14117-02	17-10
14118-00	17-34
14119-00	17-5
14119-02	17-6
14126-00	17-33
14129-00	19-7
14130-02	17-4
14130-03	19-19
14132-00	17-36
14133-00	17-3
14134-00	19-43
14135-00	19-21
14138-00	17-2
14139-00	17-1
14141-00	19-40
14142-00	19-14
14142-02	19-15
14145-00	19-8
14146-00	19-5
14147-00	19-22
14160-02	36-5
14161-00	4-20
14174-00	29-38
14175-79	20-21
14175-96	34A-7
14177-00	48-10
14180-02	48-9
14182-00	4-35
14188-00	34-7
14189-00	29-89
14192-00	4-15
14203-00	35-2
14204-00	35-1
14205-00	15-10
14205-00	16-32
14205-00	16A-22
14205-00	34B-28
14207-02	35-1
14208-02	35-2
14209-02	35-3
14210-00	35-3
14216-00	9-3
14221-00	9-50
14221-03	9-50
14222-00	5-54
14222-00	6-54
14222-02	5-22
14222-02	6-22
14223-02	36-3
14223-03	36-3
14223-03	38-4
14224-03	38-5
14224-12	36-4
14225-00	37-34
14226-02	36-2
14226-03	36-2
14226-03	38-1
14230-05	37-21
14232-02	5-8
14232-02	6-8
14235-00	29-21
14236-00	32-23
14239-00	29-93
14249-00	29-2
14253-02	29-5
14253-05	29-5
14261-00	4-43
14271-00	4-34
14275-00	8-73
14278-00	22A-13
14279-00	22A-11
14280-00	22A-4
14281-00	22A-3
14282-00	22A-2
14285-02	17-34
14287-00	21-57
14287-00	22A-16
14290-00	22A-12
14291-00	4-48
14291-01	4-48
14296-00	52-35
14296-00	53-40
14296-00	53A-20
14296-00	54-1
14300-19	43-1
14300-27	45 4
14300-28	43-4
14307-00	35-65
14308-00	10-12
14311-18	52-17
14311-18	54-3
14311-23	53-36
14311-48	53A-8
14313-00	53-44
14313-00	53A-21
14313-00	54-2
14315-00	21-47
14316-00	21-58
14317-00	21-59
14318-00	21-60
14319-02	21-61
14320-00	21-62
14321-00	21-30c
14322-00	21-31
14322-03	21-30e
14324-00	21-30a
14325-02	21-56
14326-00	21-30
14328-00	21-30d
14330-02	35-38
14337-02	9-24
14337-03	9-24
14337-04	40A-7
14338-02	36-24
14340-00	11-49
14345-00	34B-9
14347-00	20-16
14348-00	20-13
14349-00	20-21
14353-00	20-11
14356-00	20-6
14357-00	19-10a
14358-00	19 9
14358-02	19-10
14359-00	19-1
14360-00	20-18
14361-02	5-43
14361-02	6-43
14361-03	5-44
14361-03	6-44
14361-03	18-18
14363-00	19-3
14366-00	29-59
14367-00	29-57
14371-02	5-46
14371-02	6-46
14371-03	5-47
14371-03	6-47
14371-03	18-17
14382-00	6-3
14382-01	6-3
14383-04	5-70
14383-05	5-70
14385-00	6-1
14385-01	6-1
14387-00	4-3
14387-01	4-3
14389-00	4-4
14389-01	4-4
14391-02	5-70
14391-02	6-71
14391-03	5-70
14391-03	6-71
14392-02	5-71
14392-02	6-72
14392-03	5-71
14392-03	6-72
14394-00	4-1
14394-01	4-1
14400-00	2-7
14400-01	2-7
14400-04	2-7
14400-05	2-7
14401-03	4-51
14401-04	4-53
14401-05	4-55
14401-08	4-49
14404-00	34B-4
14411-02	4-50
14411-03	4-52
14411-04	4-54
14419-00	34B-5
14420-00	34B-25
14422-00	31-1
14424-00	31-2
14426-00	31-4
14428-00	35-40
14434-02	29-28
14435-00	8-77
14435-00	20-21
14439-00	34-5
14439-07	34-5
14439-07	40B-9
14440-00	34-6
14441-00	29-41
14444-00	29-2
14452-00	34-3
14453-02	5-71
14453-03	5-71
14453-04	5-71

Part Number	Figure and Index No.
14453-05	5-71
14455-00	34-1
14456-00	34-2
14457-00	34-4
14458-00	34-7
14458-05	34-7
14461-00	4-14
14467-00	34-8
14467-05	34-8
14467-07	34-8
14470-00	35-68
14472-00	32-37
14481-02	7-14
14481-02	7-17
14490-00	8-67
14490-00	21-10
14492-00	18-3
14497-00	18-1
14510-00	36-30
14513-00	34-20
14535-00	34A-5
14539-00	34A-6
14541-00	4-33
14543-04	34A-1
14543-05	34A-1
14549-00	29-63
14570-00	28-20
14570-01	28-20
14571-00	4-47
14571-01	4-47
14572-00	52-19
14572-00	53-24
14573-00	52-34
14573-00	53-37
14573-00	54-4
14574-00	52-23
14574-00	53-3
14574-01	52-24
14574-01	53-4
14575-00	53-38
14576-00	52-25
14576-00	53-9
14576-00	53A-19
14579-02	13-28
14580-00	52-41
14580-00	53-41
14580-00	53A-10
14580-00	54-23
14581-00	4-40
14582-00	9-52
14585-00	53-45
14586-00	53-46
14590-00	52-33
14590-00	53-6
14598-00	52-18
14602-00	52-32
14611-00	4-41
14611-01	4-41
14621-00	4-42
14621-01	4-42
14624-00	29-59
14744-00	15-26
14785-03	40-15
14786-00	40-2
14786-01	40-2
14787-03	40-1
14798-00	36-24
14807-00	17-26
14808-00	19-47
14809-00	17-23
14810-00	17-34a
14818-00	21-30f
14819-00	21-30c
14821-00	21-301
14822-00	21-30g
14824-00	21-30h
14825-00	21-30j
14826-00	21-30d
14827-00	19-70
14828-00	21-30
14838-00	9-52
14843-02	54-13
14844-04	16A-1
14844-06	16A-1
14849-02	8-6
14882-00	16A-14
14884-00	2-39
14885-00	2-39
14904-00	11-34
14914-00	18-23
14917-00	18-22
14917-01	18-22
14941-06	5-41
14941-06	6-41
14941-07	5-42
14941-07	6-42
14953-00	21-64
14978-00	8-36
14979-00	8-39
14983-03	8-37
14984-02	8-38
15000-00	16A-31
15005-00	29-5
15007-00	29-96
15009-00	32-22
15010-00	32-15
15012-00	32-12
15019-00	29-99
15020-00	29-98
15047-00	36-24
15050-00	36-24
15065-00	53-22
15066-00	36-34
15067-00	36-31
15087-00	30-2
15087-04	30-4
15098-00	32-35
15158-00	29-100
15158-00	34-30
15166-02	40A-5
15211-00	5-74
15216-00	29-32
15216-00	30-21
15232-00	16-30
15232-00	16A-24
15249-00	14-1
15249-00	15-1
15251-00	54-6
15251-03	53-6
15253-00	54-7
15256-00	54-8
15259-00	16A-6
15264-00	53-3
15264-00	53A-18
15264-00	54-5
15264-01	53-4
15264-01	53A-18
15264-01	54-5
15265-00	53A-19
15265-00	54-12
15271-00	40C-6
15271-02	40A-7
15271-03	40C-7
15271-06	40C-6
15271-07	40C-7
15273-00	40B-1
15275-00	40A-8
15281-00	40C-1
15289-00	19-52
15290-00	19-56
15299-00	13-32
15300-00	13-31
15302-02	13-28
15302-02	52-37
15302-02	53-30
15302-02	53A-6
15302-04	13-28
15302-05	13-28
15302-05	53A-6
15305-00	53-51
15307-00	53A-1
15309-00	53A-11
15312-00	36-14
15313-00	54A-10
15314-00	54A-9
15317-00	40C-9
15318-00	40C-8
15323-02	36-31
15324-02	36-24
15325-02	36-32
15332-02	36-3
15472-01	4-2
15482-00	4-4
15482-01	4-4
15489-02	37-40
15489-04	37-40
15491-02	36-44
15503-02	36-3
15504-02	36-24
15529-02	34-5
15530-02	29-100
15530-02	34-30
15562-00	5-3
15562-01	5-3
15572-00	5-4
15572-01	5-4
15572-02	6-4
15572-03	6-4
15631-02	4-37
15631-02	7-12
15631-03	4-36
15712-00	5-69
15723-00	4-6
15723-01	4-6
15726-02	23-43
15727-02	23-45a
15742-00	4-7
15761-00	3-9
15773-00	5-75
15831-02	5-67
15831-02	6-69
15831-05	5-69
15831-05	6-70
15849-02	34C-15
15849-02	39-15
15900-02	9-32
15999-02	9-65
16141-00	5-75
16141-00	6-76
16192-00	5-66
16192-00	6-68
16192-01	5-66
16192-01	6-68
16462-00	5-33
16462-00	6-33
16472-00	5-35
16472-00	6-35
16551-00	4-11
16561-00	4-12
16601-00	4-10
16611-00	4-9
16621-00	2-57
16633-24	34C-20
16633-28	34C-19
16633-28	34C-20
16633-31	34C-19
16633-62	16A-20a
16633-62	34C-14
16633-62	34C-32
16633-80	34C-18
16633-83	34C-29
16775-00	13-3
16775-00	13-8
16775-00	13-18
16860-00	37-44
16933-06	52-20

Part Number	Figure and Index No.
16933-06	53-21
16933-21	53A-2
17604-06	38-6
17604-09	36-5
17766-65	35-32
17955-00	52-31
17955-00	53-1
18307-00	35-67
18379-00	6B-22
18576-06	36-37
18831-03	16A-27
18875-07	13-26
18875-07	41-1
19286-00	53-34
19286-00	53A-7
19286-00	54-9
19513-24	2-43
19657-00	2-2
19807-00	37-45
20391-00	10-44
20491-02	10-36
20491-03	10-35
2~551-00	10-43
20611-00	10-39
20611-02	10-39
20631-00	10-41
20652-00	10-33
20751-00	10-51
20841-00	10-16
20841-01	10-16
20951-00	10-18
20951-01	10-18
20961-00	10-19
20961-01	10-19
20981-02	10-50
21161-00	10-37
21272-02	10-9
21272-03	10-9
21571-00	10-14
21571-01	10-13
21621-27	8-38
21752-02	10-26
21752-03	10-2
21784-04	53-32
21811-03	41-9
21879-02	40C-5
22103-02	53A-23
22104-04	53A-24
22105-06	53A-25
22369-04	37-7
22369-23	37-30
22369-23	37-31
22412-00	10-38
22478-00	53-54
22482-00	53-53
22859-00	9-66
23302-00	52-27a
23302-00	53-28
23302-00	54-10
23303-00	52-27a
23303-00	53-28
23303-00	54-11
23969-02	36-57
23969-03	36-56
24032-09	8-35
24032-18	8-35
24032-22	8-35
24101-00	10-3
24121-02	10-1
24121-03	10-5
24182-11	53A-3
24712-00	16A-25
24712-00	16A-49
24712-02	16A-48
24918-00	24-45
25801-05	11-50
26749-07	34C-1
30491-00	24-47
30531-00	27-42
30531-02	27-42
30541-02	27-41
30602-06	24-1
30602-07	24-1
30602-10	24-1
31322-05	24-15
31322-05	24-25
31322-06	24-10
31392-00	24-17
31506-06	36-54
31702-00	24-45
33506-07	54A-12
33543-00	54A-11
39273-03	54C-7
39995-35	29-59
40071-00	42-17
40071-00	44-5
40081-00	7-7
40081-00	42-18
40081-00	43-14
40081-00	44-6
40092-10	4-23
40123-03	43-1
40123-66	42-1
40123-76	43-4
40123-77	45-4
40123-78	42-1
40123-81	42-1
40123-88	42-3
40123-89	42-1
40123-92	42-2
40131-00	23-10
40223-04	41-8
40261-00	41-12
40451-02	6A-3
40451-02	6A-4
40451-02	6A-9
40451-02	6B-3
40451-02	6B-4
40451-02	6B-12
40451-03	6A-3
40451-03	6A-4
40451-03	6A-9
40451-03	6B-3
40451-03	6B-4
40451-03	6B-12
40451-06	6A-4a
40451-07	6A-4a
40501-00	2-21
40501-00	6B-11
40531-00	23-20
40572-00	23-23
40592-00	9-27
40622-07	23-43
40643-00	23-35
40651-00	48-1
40701-00	7-8
40701-00	43-13
40721-00	46-6
40731-00	43-12
40731-00	46-7
40821-03	48-5
40842-04	12-9
40842-05	12-10
40885-00	16A-43
40885-00	16A-44
40885-02	16A-44
40941-00	12-6
40991-00	43-9
41001-00	42-13
41001-00	45-12
41031-02	23-3
41031-03	23-18
41101-00	47-2
41121-00	47-4
41151-00	47-6
41271-02	42-6
41291-00	4-56
41371-02	41-10
41371-03	41-10
41371-04	41-10
41491-00	13-12
41521-00	28-23
41531-00	28-22
41551-00	13-13
41561-00	28-20
41581-04	28-16
41631-00	48-18
41652-00	23-34
41652-01	23-34
41671-13	46-1
41671-15	46-1
41671-17	46-1
41671-19	46-1
41881-00	2-20
41881-00	6B-9
41881-02	2-15
41881-02	6A-8
41891-00	2-19
41891-00	6B-10
42585-00	2-18
42585-01	2-18
42592-00	2-16
42592-01	2-16
42592-04	2-16
42592-05	2-16
42664-03	46-2
42692-00	48-19
42722-00	43-2
42722-00	43 5
42722-00	45-5
42722-02	43-2
42722-02	45-5
42722-00	42-5
42722-00	42-8
42722-02	42-5
42722-02	42-8
42792-00	41-4
42792-00	41-7
42800-04	16A-15
42812-00	41-2
42812-02	41-5
42891-00	21-32
42891-00	47-3
42911-00	46-8
42961-02	48-11
42972-02	6B-2
42972-03	6B-2
43001-00	46-3
43001-00	48-29
44235-00	37-42
44291-02	39-8
48659-08	40A-13
48659-11	40A-13
49101 04	54A-12
49374-03	9-65
49977-86	40-3
50042-00	12-12
50111-00	11-32
50131-00	9-4
50173-12	9-3
50183-04	9-1
50183-07	9-1
50183-11	9-1
50192-00	9-5
52745-00	4-45
52745-00	9-45
52841-00	9-7
52841-07	9-7
52841-10	9-7
52841-13	9-7
52841-19	9-7
52841-22	9-7
52841-24	9-7
52841-26	9-7
53093-00	54A-8
53093-04	54B-8

Part Number	Figure and Index No.
54800-54	54C-1
55549-02	23-51
60291-02	47-1
60401-04	6A-11
60401-05	6A-11
60571-00	8-3
60571-01	8-3
60602-00	9-26
60671-00	3-8
60703-02	24-66
60704-02	54B-9
60704-02	54C-8
60705-02	54B-5
60708-02	6A-5
60708-02	6 B-5
60708-03	6B-6
60708-04	6B-7
60708-05	6B-8
60708-06	6A-6
60709-02	2-11
60709-02	6A-1
60709-03	2-11
60709-03	6A-1
60709-06	6A-10
60709-08	6A-12
60709-09	6A-12
60709-10	6A-13
60709-11	6A-13
60709-12	6A-14
60709-13	6A-14
60709-14	6A-2
60709-15	6A-2
60709-18	6A-15
60714-02	2-16
60714-02	6B-1
60714-03	2-16
60714-03	6B-1
60714-04	6B-13
60714-05	6B-13
60714-06	6B-14
60714-07	6B-14
60714-08	6B-15
60714-09	6B-15
60714-10	6B-16
60714-11	6B-16
60714-12	6B-17
60714-13	6B-17
60714-14	6B-18
60714-15	6B-18
60714-16	6B-2
60714-17	6B-2
60714-26	6B-23
60714-27	6B-20
60714-28	6B-20
60714-29	6B-19
60714-30	6B-19
60723-02	9-63
60724-02	9-64
60726-02	57-29
60727-02	37-39
60727-03	37-39
60728-02	36-48
60742-00	8-4
60742-01	8-4
60743-02	34C-28
60744-02	34C-27
60744-02	34C-31
60745-02	34C-31
60748-03	6B-21
60750-02	2-29
60750-07	2-29
60752-00	2-22
60753-02	9-65
60754-02	37-40
60754-04	37-40
60756-02	35-77
60762-02	40A-2
60763-02	35-18
60766-02	36-52
60863-03	3-10
60863-03	8-26
60863-05	8-27
60863-09	3-11
61323-10	13-20
61341-05	23-5
61341-06	23-4
61341-07	23-19
61342-00	23-17
61541-33	16A-27
61541-36	34C-2
61964-02	35-76
64834-00	8-30
64835-00	8-4
64835-01	8-4
64995-03	32-35
66696-00	36-49
70371-02	21-29
70371-02	29-9
70371-02	30-59
70371-02	34A-10
70371-03	21-28
70371-03	29-10
70371-03	30-8
70371-03	34A-11
70591-02	29-21
70591-02	30-16
70801-00	30-52
71061-00	29-35
71061-00	30-23
71061-04	28-17
71242-08	35-23
71242-09	35-22
71261-05	29-31
71261-07	29-92
71451-03	34-21
71451-03	34-22
71451-08	34-24
71451-10	34-23
71991-00	35-46
72091-00	2-51
72302-03	19-57
72302-03	35-42
72522-00	33-14
72941-02	30-28
73451-03	29-7
73451-03	34A-13
74181-00	2-32a
74311-00	29-39
74311-00	30-27
74912-00	34-17
77413-02	35-55
80002-03	30-55
80002-13	17-22
80002-15	48-7
80002-20	29-16
80002-27	17-12
80002-27	29-86
80002-27	30-53
80002-41	7-9
80002-62	29-88
80007-38	16A-21a
80007-38	34C-21
80007-38	34C-30
80007-39	34C-33
80012-03	5-52
80012-03	6-52
80012-03	43-8
80012-04	22A-1
80012-04	37-8
80012-04	42-16
80012-04	43-10
80012-04	44-4
80012-04	46-9
80012-04	47-13
80012-04	48-27
80012-04	48-30
80012-06	23-13
80012-17	23-30
80012-65	35-20
80012-81	17-9
80012-87	19-20
80022-20	10-34
80022-31	5-10
80022-31	6-10
80022-44	23-49
80022-45	23-50
80022-63	24-36
80022-68	29-14
80032-25	36-27
80032-34	17-13
80032-34	19-65
80032-34	21-30k
80032-34	22A-6
80032-34	29-12
80032-34	30-9
80032-39	22A-7
80032-46	49-10
80032-51	13-15
80032-51	29-34
80032-52	50-3
80032-52	51-5
80032-52	52-6
80032-52	53-8
80032-52	54-14
80032-55	17-11
80032-55	21-19
80032-69	35-66
80111-00	2-28
80122-05	37-12
80122-07	8-33
80122-07	28-14
80122-07	48-3
80122-10	12-8
80122-10	21-3
80122-10	36-4
80122-11	4-59
80122-11	28-13
80122-16	24-18
80122-17	41-11
80122-18	22A-15
80122-18	42-14
80122-18	44-3
80122-18	46-4
80122-18	47-11
80122-18	48-30
80122-23	21-38
80122-24	48-16
80122-25	5-9
80122-25	6-9
80122-25	45-13
80122-30	27-66
80122-41	27-51
80122-41	48-13
80122-43	8-34
80122-43	29-77
80122-43	30 39
80122-43	30-47
80122-48	2-31
80122-49	8-24
80122-51	3-5
80122-51	8-25
80122-53	2-12
80122-53	2-17
80122-53	3-7
80122-53	8-23
80122-53	23-24
80122-53	23-36
80122-53	23-44
80122-55	29-94
80122-55	31-10
80122-67	35-64
80122-86	23-48
80132-10	11-35
80222-03	12-5
80222-03	28-24
80222-29	17-25

Part Number	Figure and Index No.
80222-32	34A-2
80292-15	10-40
80418-02	54A-11
80421-00	22A-14
80421-00	42-9
80421-00	43-7
80421-00	44-2
80421-00	47-12
80421-00	48-4
80421-00	48-6
80421-00	48-21
80421-00	48-26
80421-00	48-31
80529-02	54B-7
80541-02	3-6
80541-02	8-31
80541-02	18-11
80687-02	54C-10
80944-02	7-21
81102-03	5-13
81102-03	5-18
81102-03	5-24
81102-03	5-29
81102-03	5-37
81102-03	6-13
81102-03	6-18
81102-03	6-24
81102-03	6-29
81102-03	6-37
81102-17	29-76
81102-17	30-46
81172-20	13-11
81232-15	3-3
81232-30	24-14
81262-08	12-7
81262-08	28-21
81262-14	45-11
81262-19	30 10
81262-36	43-3
81272-15	10-10
81322-03	48-2
81332-09	10-11
81342-05	48-14
81342-08	48-17
81342-11	45-13
81342-20	13-10
81342-42	42-10
81342-42	43-11
81342-45	8-56
81342-45	14-3
81342-45	15-24
81342-45	16-10
81342-45	16A-30
81342-56	37-29
81352-11	43-4
81352-32	43-6
81381-00	48-22
81411-02	48-32
81761-04	47-10
81761-11	47-9
81903-03	24-42
82161-02	36-39
82332-26	29-33
82332-26	30-22
82332-28	29-36
82332-28	30-24
82332-38	29-36
82341-02	10-31
82371-04	34C-18
82371-04	35-12
82371-06	2-37
82371-06	15-6
82371-06	40A-10
82371-07	2-48
82371-10	2-33
82371-10	16-5
82371-15	16-4
82371-16	19-31
82371-17	17-32
82371-17	19-32
82371-18	17-17
82371-18	19-37
82371-19	19-48
82371-19	19-86
82371-20	19-31
82371-21	21-14
82371-22	16-6
82371-23	34B-15
82371-25	34B-16
82371-26	15-6
82371-29	17-20
82371-31	2-36
82371-33	16-7
82371-33	34B-17
82371-36	35-62
82371-37	35-63
82371-39	16A-20a
82371-43	34C-19
82371-48	34B-14
82371-55	34B-18
82371-56	29-39
82371-57	34C-20
82371-59	21-22
82371-60	16A-21
82371-60	34C-3
82371-74	16A-21a
82371-74	34C-21
82371-87	34C-4
82371-89	53-52
82371-90	34C-5
82371-94	16-31
82371-95	16A-20
82371-95	34C-6
82371-97	19-31
82371-97	19-32
82371-140	34C-4
82371-140	34C-3
82461-00	3-1
82461-00	8-5
82461-00	9-62
82732-03	14-11
82732-08	29-13
82732-24	4-44
82732-72	23-13
82732-80	19-76
83161-02	13-21
83161-02	13-33
83302-13	11-26
83302-28	20-4
83481-00	9-9
83952-02	13-28
84332-00	30-30
85012-04	12-11
85012-04	28-26
85012-05	12-11
85012-05	28-26
85012-06	12-11
85012-06	19-24
85012-12	48-15
85012-14	8-57
85012-32	19-60
85012-32	35-41
85012-47	9-36
85012-47	19-24
85012-47	31-5
85012-48	27-54
85012-48	27-65
85012-49	8-25
85012-49	9-13
85012-57	24-11
85012-57	24-30
85012-60	29-6
85012-76	9-47
85012-78	3-4
85012-81	20-16
85052-13	30-25
85061-00	10-17
85211-00	48-20
85327-02	2-29
85512-03	49-4
85512-06	53-7
85512-09	53-7
86062-79	23-41
86062-80	48-8
86092-15	9-6
86102-92	42-11
87477-02	35-40
89131-02	35-44
89386-02	35-10
90797-02	35-75
90797-10	36-8
90797-13	37-2
91193-00	29-9
91193-00	30-7
99478-00	16A-13
99479-02	8-75
100871-02	35-45
101 980	29-18
101 980	29-19
101 980	30-13
153 026	49 19
153 026	50-10
153 026	51-14
153 026	52-38
153 026	53-23
180 430	11-17
180 497	2-27
180 497	9-25
180 497	35-9
180 808	32-27
180 810	8-43
187 513	33-15
187 536	9-15
187 550	32-36
187 610	9-14
189 080	36-4a
189 080	36-6
189 080	38-5a
189 534	35-11
189 625	40-13
400 002	24-65
400 003	23-29
400 003	27-44
400 211	29-73
400 211	30-43
400 212	24-3
400 213	24-4
400 216	27-45
400 218	27-45
400 219	24-33
400 220	24-32
400 251	27-46
400 262	27-67
400 275	30-38
400 321	29-69
400 438	7-3
400 440	23-25
400 443	4-57
400 443	23-40
400 444	23-37
400 453	54-15
401 194	2-9
401 195	2-8
401 266	23-14
401 266	23-26
401 274	23-12
401 315	23-9
401 318	24-2
401 334	25B-12
401 355	7-18
401 359	24-2
401 366	7-20

Part Number	Figure and Index No.
401 400	29-82
401 918	29-8
402 821	19-61
403 107	19-51
403 107	19-55
404 100	23-33
404 101	27-48
404 103	24-4
404 103	27-47
404 103	29-74
404 103	30-44
404 104	27-49
404 104	30-40
404 105	29-70
404 395	7-15
404 395	7-19
404 838	25A-17
404 887	54-15
404 888	19-51
404 888	19-55
404 888	24-65
404 888	25B-15
404 889	2-8
404 889	2-9
404 889	24-2
404 890	24-32
404 890	24-33
404 909	54B-11
406351	31-6
406 355	29-6
406 357	31-7
406359	31-6
406 359	31-7
406 361	32-38
406 681	7-3
406 681	23-7
406 681	23-15
406 681	23-28
406 681	23-39
406 681	24-59
406 682	23-11
406 682	23-32
406 683	7-20
406 683	7-18
406 683	29-83
406 685	27-69
406 779	9-41
406 779	21-55
406 779	33-12
406 779	33-17
406 779	33-21
406 779	33-27
406 863	9-57
407 120	24-46
407 562	54B-11
407 564	4-58
407 564	7-3
407 564	23-8
407 564	23-27
407 564	23-38
407 565	2-56
407 565	2-57
407 565	23-31
407 565	25B-14
407 565	27-52
407 566	2-8
407566	2-9
407 566	7-18
407 566	24-2
407 567	24-4
407 567	24-32
407 567	24-33
407 567	27-50
407 568	27-53
407 568	27-68
407 585	2-56
407 585	2-57
407 585	25A-15
407 585	258-13
407 586	24-2
407 587	24-32
407 587	24-33
407 587	25A-18
408 813	9-61
415 521	54B-11
415 531	24-46
415 737	31-8
415 754	31-9
415 772	24-46
416 995	31-8
416 995	31-9
421 022	2-57
422 604	4-29a
422 604	4-39a
424 051	23-47
424 051	27-56
424 059	7-15
424 059	7-19
424 059	24-4
424 059	27-55
424 059	27-57
424 059	29-71
424 059	29-75
424 059	30-41
424 059	30-45
424 065	24-48
424 173	22A-9
424 177	22A-8
424 217	2-55
424 224	23-46
424 910	19-18
434 128	22A-10
434 134	17-15
434 134	29-47
434 134	29-49
434 134	30-34
434 134	34B-12
434 138	2-47
434 138	8-64
434 138	34B-13
434 142	9-34
434 142	21-27
434 142	24-22
434 142	24-40
434 142	29-48
434 142	30-35
434 142	32-24
434 142	34-7
434 142	34-8
434 142	37-24
434 144	24-23
434 144	24-39
450 025	36-12
450 035	36-12
450 035	38-14
450 380	34B-19
450 383	37-38
450 384	37-38
450 390	40B-14
450 611	14-6
450 628	14-7
450 628	15-17
450 628	16-13
450 628	16A-5
450 635	16-16
450 642	14-9
450 643	14-9
450 643	15-20
450 643	16-19
450 646	14-9
450 646	15-20
450 646	16-19
450 646	16A-12
450 652	36-32
450 658	15-13
450 658	16-15
450 658	16A-7
450 675	37-33
450 676	14-8
450 677	14-8
450 677	15-19
450 677	16-12
450 679	14-9
450 680	14-4
450 680	15-14
450 680	16-14
450 680	16A-51
450 681	14-4
450 683	14 9
450 685	14-9
450 687	14-8
450 687	15-19
450 687	16-12
450 687	16A-4
450 694	14-6
450 694	15-16
450 694	16-18
450 699	14-8
450 699	15-19
450 699	16-12
450 699	16A-4
450 706	15-22
450 706	16-20
450 706	16A-13
450 742	37-46
450 787	16A-32
450 791	14-6
450 930	30-1
450 938	29-1
450 940	29-1
450 946	29-1
450 981	29-1
450 986	29-1
450 992	29-1
450 994	29-1
450 995	29-1
450 996	29-1
451 103v	35-19
451 261	53-42
451 272	52-40
451 272	53-47
451 272	54-22
451 280	50-1
451 286	53-31
451 338	11-4
451 339	11-5
451 340	11-2
451 341	11-1
451 342	11-3
451 344	11-50
451 348	11-50
451 370	11-50
451 601	27-24
451 602	27-1
451 608	27A-1
451 610	27-10
451 631	27-58
451 702	24-49
451 709	28-1
451 710	28-1
451 721	24-43
451 722	24-43
451 735	24-44
451 736	24-44
451 740	24-44
451 741	24-44
451 760	24-62
451 760	25-1
451 771	24-60
451 850	40A-6
451 851	30-57
451 855	29-51
451 855	29-67
451 857	15-5
451 857	34B-1
451 859	34B-3

Part Number	Figure and Index No.
451 860	19-53
451 881	16A-28
451 939	16-22
451 939	16A-33
451 939	16A-47
451 940	15-5
452 009	45-2
452 009	45-3
452 335	4-22
452 343	19-13
452 343	20-18
453126	4-8
453 364	9-49
453 415	52-27b
453 415	53-29
453 415	53A-14
453 415	54-11
453 602	40B-7
453 616	16A-25
453 627	18-2
453 640	32-33
453 647	20-21
453 647	29-62b
453 668	40B-8
453 680	16-35
454 035	9-58
454 046	52-21
454 051	52-39
454 051	53-49
454 052	53-25
454 064	52-22
454 064	53-33
454 118	29-97
454 656	36-33
454 656	36-50
454 656	39-13
454 656	40A-9
454 656	40B-6
454 657	36-21
454 657	36-55
454 657	36-59
454 657	52-26
454 657	53-39
454 657	53A-15
454 657	54-18
454 658	36-33
454 659	36-47
454 660	36-33
454 662	36-33
454 663	40B-5
454 677	36-58
454 711	36-51
454 832	34C-22
454 832	34C-25
454 873	29-43
454 874	52-42
454 874	53-35
454 882	21-21
454 882	29-40
454 882	30-26
454 883	17-16
454 883	19-36
454 884	17-19
454 887	29-44
454 887	30-11
454 887	30-31
454 888	11-28
454 889	52-27
454 889	53-27
454 890	29-37
454 900	19-26
454 921	17-31
454 921	19-30
454 924	21-7
454 925	37-22
454 927	29-44
454 933	29-54
454 983	34C-7
454 983	34C-24
454 983	40A-11
454 987	34C-8
454 987	34C-23
454 987	34C-26
455 126	18-4
455 127	18-5
455 128	18-4
455 151	36-45
455 158	29-95
455 159	21-4
455 160	50-19
455 162	29-64
455 168	29-62
458 892	35-33
458 893	16A-26
458 894	16A-29
458 895	35-34
458 898	29-55a
458 903	2-45
458 903	15-5
458 904	2-45
458 904	2-53
458 906	21-18
458 918	34B-10
458 920	16-9
458 924	29-66
458 926	19-49
458 930	17-18
458 930	19-44
458 931	29-55
458 931	29-55a
458 932	29-56
458 940	40A-12
458 945	16-34
458 945	16A-18
458 948	16-33
458 948	16A-22
458 948	16A-45
458 950	348-8
458 958	34C-10
459 110	8-1a
459 111	2-17a
459 112	8-1b
459 113	24-34a
459 114	23-43a
459 115	23-35a
459 116	23-23a
459 119	2-7a
459 120	2-7a
459 125	2-12a
459 848	12-16
459 864	49-15
459 864	50-11
459 864	51-15
459 864	52-12
459 864	53-14
459 932	45-2
459 934	45-2
459 939	45-3
459 940	45-3
460 634	52-28
460 634	53-43
460 634	53A-5
460 634	54-19
460 638	29-3
460 639	29-3
460 639	30-3
460 649	2-50
460 649	15-5
460 651	19-35
460 651	35-37
460 652	35-24
460 653	35-52
460 654	35-33
460 654	35-51
460 656	17-39
460 659	16-22
460 659	35-33
460 661	34B-11
460 661	35-34
460 661	35-50
460 663	28-18
460 669	15-10
460 669	16-26
460 669	17-41
460 669	19-46
460 669	21-49
460 677	21-16
460 677	24-67
460 679	34B-22
460 680	15-12
460 680	16-3
460 683	35-30
460 684	35-29
460 685	15-4
460 685	21-3
460 689	35-35
460 689	35-59
460 690	21-30b
460 693	48-33
460 888	34C-16
461 623	37-10
461 624	36-10
461 624	38-8
462 012	30-58
461 013	21-46
462 021	40A-4
463 364	21-35
463 368	9-33
463 368	32-4
463 368	32-21
463 368	33-7
463 368	33-10
463 368	37-4
463 369	32-19
464 016	35-56a
464 016	35-58a
464 016	35-76
464 018	9-48
464 326	49-13
464 326	50-13
464 326	51-17
464 326	52-10
464 327	53-12
464 327	53A-13
464 362	54-16
465 134	29-65
467 050	49-18
467 050	50-5
467 050	51-10
467 050	53-19
467 062	49-22
467 062	50-6
467 062	51-9
467 062	52-29
467 062	53-20
468 002	53A-16
468 006	53A-17
468 340	35-31
470 645	52-30
470 645	53-48
470 645	54-24
470 648	37-37
470 989	Misc.
471 052	13-2
471 052	13-19
471 052	13-25
471 053	13-9
471 059	8-73b
471 060	13-19
472 015	32-10
472 015	33-3
472 036	40C-3
472 330	40C-2
472 660	37-1
472 661	4-1a
472 661	40-5

Part Number	Figure and Index No.
472 665	39-1
472 666	39-4
472 682	11-10
472 683	11-11
472 736	37-25
472 963	39-12
474 647	49-14
474 647	50-12
474 647	51-16
474 647	52-11
474 647	53-13
474 647	54-17
474 649	49-14
474 649	50-12
474 649	51-16
474 649	52-11
474 649	53-13
474 649	54-17
474 654	53A-12
474 656	Misc.
476 640	35-36
476 647	16A-28
476 648	16A-29
476 652	2-35
476 652	16-8
476 652	34B-2
476 653	17-40
476 656	18-2
476 656	18-6
476 657	18-7
476 658	21-25
476 659	34B-20
476 664	29-56
477 131	18-5
477 134	18-4
477 135	18-5
477 144	18-4
477 641	21-63
477 829	54B-10
477 829	54C-11
479 371	18-4
479 372	18-5
480 650	29-6
480 650	30-6
480 691	24-12
480 691	24-31
480 731	47-9
480 929	11-12
480 932	34-29
480 937	16A-25
480 937	17-39
480 937	17-42
480 937	19-83
480 938	21-26
481 096	4-35
481 662	34B-23
481 681	34C-1
484 183	37-39
484 341	32-17
484 373	36-45
484 373	36-59
484 654	29-58
484 654	29-60
484 698	25A-9
484 701	21-5
486 381	34B-21
486 565	14-10
486 570	14-10
486 570	15-21
486 570	16-25
486 574	14-10
486 574	15-21
486 574	16-25
486 600	19-12
486 600	19-17
487 042	16A-50
487 149	36-26
487 149	38-7
487 272	11-38
487 272	11-47
487 274	11-37
487 274	11-41
487 276	13-27
487 288	9-35
487 288	32-6
487 288	32-26
487 288	32-29
487 288	32-32
487 288	33-13
487 288	33-19
487 288	33-24
487 288	33-30
487 288	37-6
487 291	45-14
487 302	17-7
487 302	19-11
487 302	19-16
487 304	22-12
487 328	45-10
487 329	34B-24
487 335	17-39
487 335	19-81
487 350	40A-15
487 527	14-2
487 527	15-25
487 527	16-28
487 527	16A-16
487 527	37-36
487 542	29-6
487 550	14-2
487 550	15-25
487 550	16A-16
487 558	24-7
487 558	24-27
487 563	9-33
487 563	32-2
487 563	32-18
487 563	33-6
487 563	33-9
487 563	37-4
487 564	32-3
487 564	32-20
487 565	32-3
487 565	32-20
487 566	32-18
487 569	29-6
487 569	30-6
487 571	29-6
487 593	17-43
487 640	49-7
487 640	50-4
487 640	51-7
487 640	52-8
487 640	53-10
487 726	40A-14
487 774	13-29
487 776	36-36
487 776	40B-2
487 777	40C-4
487 778	36-20
487 778	36-35
487 778	40B-3
487 790	36-46
487 790	52-36
487 823	13-30
487 907	36-53
488 357	52-13
488 371	2-52
488 374	35-49
488 379	17-39
488 544	2-46a
489 639	15-8
489 639	16-21
489 639	16A-19
492 014	35-57
492 022	35-39a
492 023	28-10
492 024	15-11
492 024	16-27
492 025	19-50
492 026	19-54
492 027	21-24
492 029	34B-26
492 059	34B-27
492 272	34C-12
494 058	53A-22
494 644	19-58
548 314	16A-7
548 321	16A-9a
548 322	16A-9a
548 330	14-6
548 330	16A-11
548 437	16A-9a
548 447	16A-7
548 455	16A-7
548 456	16A-8a
548 457	16A-8a
548 459	16A-8z
548 461	16A-8a
548 463	16A-8a
548 465	16A-8a
550 491	16A-11
550 493	16A-11
550 646	16 A-9
550 647	16A-8
550 664	16A-32
550 684	15-18
550 684	16-17
550 759	Misc.
550 684	16A-10
550 838	16A-32
551 174	54-21
551 176	54-20
551 177	54-25
551 219	54-20
551 222	54-25
551 727	24-64
551 727	25A-1
551 771	24-63
551 771	25B-1
554 778	2-38
554 778	15-3
554 778	34B-6
554 778	35-61
554 802	34C-9
554 871	2-34
554 871	16-2
554 871	34B-7
554 871	35-60
554 882	34A-14
554 892	34-33
554 892	40B-12
554 947	29-40
555 731	54A-14
558 819	24-68
558 900	34C-11
558 904	16A-23
558 904	16A-26
558 913	16A-46
565 288	37-43
587 903	39-14
587 951	54A-13
587 965	54A-13
587 965	54C-9
588 043	54B-6
596 058	53-50
596 058	53A-4
596 225	53A-9
750 005	24-58
750 006	25-8
750 010	25-4
750 016	24-56
750 025	25-2
750 026	25-3
750 028	25-9
750 029	24-52

Part Number	Figure and Index No.
750 031	24-51
750 033	24-54
750 035	24-50
750 039	24-55
750 041	24-57
750 064	25-7
750 065	25-5
750 273	35-43
750 283	10-52
750 284	10-53
750 286	2-57
750 287	2-57
750 295	28-9
750 330	27-43
750 341	27-31
750 343	27-30
750 345	27-32
750 347	27-33
750 350	27-35
750 351	27-25
750 354	27-8
750 354	27-27
750 356	27-28
750 357	27-29
750 357	27-34
750 358	27-26
750 367	27-7
750 369	27-6
750 372	27-9
750 372	27-21
750 379	28-6
750 384	28-8
750 386	28-4
750 387	28-5
750 454	2-57
750 454	Misc.
750 635	27-2
750 635	27-16
750 636	27-5
750 637	27-23
750 638	27-13
750 709	30-56
750 363	27-36
750 722	27-3
750 722	27-17
750 737	Misc.
750 738	Misc.
750 744	27-19
750 746	27-97
750 746	27-12
750 748	27-20
750 749	27-14
750 749	27-91
750 750	27-15
750 750	27-96
750 751	27-22
750 752	27-11
750 753	27-40
750 893	24-53
750 894	25-11
750 895	25-10
750 896	32-11
750 896	33-4
750 898	27-4
750 898	27-18
750 907	14-10
750 954	26-1
750 957	26-3
750 997	28-3
750 998	28-2
750 999	28-2
751 118	15-15
751 124	49-20
751 124	50-15
751 124	51-19
751 124	53-15
751 193	29-1
751 201	39-5
751 202	39-2
751 203	37-26
751 220	37-33
751 227	27-60
751 234	27A-2
751 264	27-83
751 265	27-93
751 291	16A-42
751 316	54A-3
751 318	54A-4
751 319	54A-5
751 349	37-47
751 350	27-71
751 375	26-1
751 376	10-32
751 381	39-3
751 381	39-6
751 388	27-62
751 389	27-63
751 389	27A-4
751 396	17-8
751 396	19-12a
751 396	19-17a
751 402	25A-16
751 422	27A-15
751 423	27A-12
751 424	27A-13
751 450	25A-14
751 475	27-40
751 492	28-27
751 533	27A-7
751 639	18-4
751 730	8-1
751 736	8-1
751 737	8-1
751 738	8-1
751 743	8-1
751 744	8-1
751 745	8-1
751 754	8-1
751 755	8-1
751 756	8-1
751 757	27-61
751 765	8-1
751 766	8-1
751 767	40A-3
751 779	27A-17
751 780	27A-3
751 806	27-89
751 815	34C-13
751 829	2-30
751 830	19-68
751 844	17-45
751 915	16A-35
751 931	27A-11
751 932	27A-14
751 964	27-98
752 120	16A-35
752 176	Misc.
752 179	Misc.
752 181	Misc.
752 189	Misc.
752 190	Misc.
752 191	Misc.
752 192	Misc.
752 193	Misc.
752 196	Misc.
752 200	Misc.
752 206	Misc.
752 215	Misc.
752 217	Misc.
752 219	Misc.
752 226	Misc.
752 233	Misc.
752 236	Misc.
752 238	Misc.
752 239	Misc.
752 241	Misc.
752 246	Misc.
752 249	Misc.
752 250	Misc.
752 263	Misc.
752 273	19-59
752 274	Misc.
752 277	Misc.
752 278	Misc.
752 279	Misc.
752 281	Misc.
752 282	Misc.
752 283	Misc.
752 293	Misc.
752 294	Misc.
752 295	Misc.
752 296	Misc.
752 298	Misc.
752 299	Misc.
752 475	28-19
752 487	27A-10
752 494	29-62a
752 688	28-7
752 692	35-56
752 692	35-58
752 696	19-69
752 749	25A-2
752 788	28-15
752 791	28-11
752 798	28-12
752 822	35-56
752 822	35-58
752 823	17-8a
752 823	19-12b
752 823	19-17b
752 826	25A-4
752 834	27A-18
752 835	27A-8
752 888	27-72
752 900	27-64
752 900	27A-5
752 957	17-44
752 965	25A-11
752 966	25A-10
752 978	10-23
752 979	10-64
752 982	27-73
752 982	27A-6
752 983	27-74
752 987	10-23
752 988	10-64
753 002	27A-9
753 124	19-50
753 127	27-70
753 133	27-59
753 165	27A-16
753 207	27-76
753 208	27-80
753 209	27-94
753 212	16A-41
753 403	27-75
753 404	27-88
753 405	27-90
753 406	27-95
753 431	37-27
753 850	25A-12
753 857	18-5
753 883	17-46
753 914	27-82
753 915	27-87
753 948	16A-38
753 949	16A-39
754 000	Misc.
754 001	Misc.
754 002	Misc.
754 005	Misc.
754 006	Misc
754 008	Misc.
754 009	Misc.
754 010	Misc.
754 011	Misc.

Part Number	Figure and Index No.
754 012	Misc.
754 013	Misc.
754 014	Misc.
754 018	Misc.
754 021	Misc.
754 022	Misc.
754 023	Misc.
754 024	Misc
754 028	Misc.
754 029	Misc.
754 030	Misc.
754 031	Misc.
754 032	Misc.
754 033	Misc.
754 039	Misc.
754 040	Misc.
754 053	Misc.
754 060	Misc.
754 063	Misc.
754 064	Misc.
754 065	Misc.
754 066	Misc.
754 067	Misc.
754 071	Misc.
754 072	Misc.
754 073	Misc.
754 084	Misc.
754 092	Misc.
754 147	Misc.
754 148	Misc.
754 149	Misc.
754 150	Misc.
754 151	Misc.
754 152	Misc.
754 153	Misc.
754 154	Misc.
754 223	Misc.
754 349	Misc.
754 350	Misc.
754 351	Misc.
754 615	25B-6
754 825	8-1
754 849	25B-8
754 850	25B-9
755 042	39-11
755 049	40A-4
755 200	39-9
755 427	16A-9a
755 824	16-29
755 830	25A-19
755 878	27-79
755 879	27-86
755 880	27-77
756 008	25B-10
756 205	27-78
756 206	27-81
756 207	27-84
756 208	27-85
756 209	27-92
756 210	27-99
756 256	16A-40
756 307	16A-37
756 398	54A-1
756 500	19-54
756 547	37-38
756 586	37-38
756 645	35-56b
756 681	25B-2
756 682	25B-4
756 907	16A-36
757 359	39-12
757 488	25A-6
757 489	25A-13
757 491	25A-7
757 831v	25B-3
757 831v	25B-5
757 899	34C-17
758 080	37-50
758 092v	54B-3
758 095	25A-8
758 266	54A-6
758 267	54A-7
758 281	54A-2
758 364	54A-2
758 452	54C-2
758 453	54C-5
758 528v	54B-2
758 733	25-6
758 733	25B-11
761 081	Misc.
761 189	39-10
761 202	25A-3
761 203	25A-5
761 618	37-49
761 620	37-48
761 939	54A-1
761 967	54A-1
761 970	24-43
761 971	24-43
761 994	24-43
761 999	24-43
762 030v	54B-1
762 256	37-41
762 357	54C-3
762 534	25B-7
763 004v	54B-4
763 017	54C-6
763 019	54C-4
763 027	40B-4
764 082	Misc.
767 390	Misc.
767-393	Misc.
767 396	Misc.

1J24
1NTENTIONALLY LEFT BLANK

1K1
1NTENTIONALLY LEFT BLANK

1K2 THRU 1L24
INTENTIONALLY LEFT BLANK